Investment Grade Audit Report (Final)

GESA 2018-1 SCI Houtzdale

Commonwealth of PA – Department of General Services

May 20, 2020

SUBMITTED BY:

The Efficiency Network (TEN)
1501 Reedsdale Street, Suite 401
Pittsburgh, PA 15233

Jim Harven

Sr, Project Development Manager
215.630.6507
Jim.Harven@tensaves.com

Contents

Energy Conservation Measures and Costs 3
Project Conditions 11
ECM 1 – Lighting 13
ECM 2 – Lighting Controls 18
ECM 3.1 – Compressed Natural Gas (CNG) Conversion 19
ECM 3.1a & ECM 3.1b – Slab Heating System 21
ECM 3.2 – Steam Plant Upgrades Using Kewanee Boiler 23
ECM 3.3 – Hot Water Plant Upgrades 26
ECM 4.1 – New HW Distribution 30
ECM 4.2 – Chilled Water (CHW) Distribution Replacement 33
ECM 5 – Water Conservation 36
ECM 5b – Replace Pressure Reducing Valves 41
ECM 6 – Central Chilled Water Plant Upgrades 47
ECM 6a – New Cooling Towers 50
ECM 6b – Arc Flash/Short Circuit Study 51
ECM 7 – Building Automation System 53
ECM 8 – Roofing Modifications 58
ECM 10 – Kitchen HVAC Modification 60
ECM 11 – AHU Coil Cleaning and Restoration 62
ECM 12 – Domestic Water Booster Pumps Replacement 64
ECM 13 – Visitor's Lot Electric Vehicle (EV) Charging Station 66
Measurement and Verification Plan 68
Environmental Benefits 70
Project Schedule and Narrative 71
Attachment 1: GESA Contract Schedules 74

Appendix A – Utility Rate Analysis

Appendix B – Lighting Savings Analysis, Heating System Upgrade Savings Analysis, Cooling System Upgrade Savings Analysis, Building Automation Upgrades Savings Analysis; Water Savings Analysis, O&M Cost History

Appendix C – Equipment Cut Sheets: Lighting, Lighting Controls, Boilers, Chillers, Pumps, Cooling Tower, Building Automation, I-Con Materials,

Appendix D – Listing of SDB and SB Firms

Appendix E – Small Diverse Business and Small Business Letter of Intent

Appendix F – Entech Design Drawings

Energy Conservation Measures and Costs

TEN is pleased to submit the following selected Energy Conservation Measures (ECMs) for the Commonwealth of Pennsylvania State Correctional Institution Houtzdale ("SCI Houtzdale"), Department of Corrections (DOC) and Department of General Services (DGS) consideration. The following list of ECMs is composed of those proposed in the RFQ stage, additional measures identified during audit activities, as well as enhancements requested by DOC during the audit period. These solutions are expected to reduce energy expense by 28%. The summary and cashflow on the next two pages outline the DOC selected project that delivers significant value to SCI Houtzdale through equipment upgrades and is funded through energy, O&M and Energy Related Cost Savings (ERCS). This project addresses deeply needed mechanical upgrades that solve pressing occupant comfort and maintenance issues that have been difficult to implement under other contracting vehicles. **Other ECMs identified during audit activities that address additional deferred maintenance needs are discussed on page 7.**

Key features of the Base project include:

- LED lighting upgrade, including over 600 new luminaires that will greatly improve aesthetics. This ECM improves over 6,600 fixtures. This ECM will also replace 1030 fluorescent troffer fixtures with new LED edge lit panels.
- Compressed natural gas (CNG) conversion including site work, 3 tractor trailer unloading station and natural gas distribution lines including propane equipment conversion in the kitchen and Building K.
- HW conversion of the existing 800 HP Cleaver Brooks steam boiler and installation of two new 350 HP HW boilers to provide N+1 HW capacity in the central plant with sufficient turn down to address low summer evening loads. This ECM also includes upgrade of the HW piping in the central plant and removal of most existing coal equipment (except in micronizing area).
- Upgrade the more lightly loaded steam system still serving the kitchen and laundry by retaining the 500 HP Kewanee boiler and installing (1) new 350 HP steam boiler with a 10:1 turn down. This ECM includes new above ground steam and condensate return lines between the central plant and building 5.
- Replace aging 410-ton Snyder General chillers with (3) new 395-ton electric chillers which have variable speed compressors. Replacement of the primary, secondary and tertiary chilled water pumping system with a new system that utilizes three (3) primary variable chilled water pumps to serve the building needs. The piping configurations will also be modified so that any pump can operate with any chiller or cooling tower, allowing maximum flexibility when any piece of equipment is out of service.
- Three (3) new 400-ton cooling towers with stainless steel basins, piping upgrades and VFDs.
- New above ground HW distribution system optimized for secure routing and structural support.
- New above ground CHW distribution system added to the HW structural supports.
- I-CON plumbing controls which include a lockout on celled toilets.
- Housing unit domestic water pressure reducing valve (PRV) upgrade.
- Expanded and upgraded Building Automation System.

DOC Selected Project Energy Conservation Measures

The selected project is compliant with the Pennsylvania Guaranteed Energy Savings Contract legislation including energy, O&M and ERCS savings over a 20-year term, inclusive of construction.

ECM #	DOC Selected Project (Energy Related Cost Savings Included) Energy Conservation Measure Description	Install Cost	Annual Energy Savings ($)	Annual O&M Savings ($)	Simple Payback	Annual kWh Savings	Annual Nat Gas (MCF)	Annual Wtr/Swr (kGal) Savings	Annual Coal / LPG Savings (MMBTU)	Act-129 Incentive
1	Lighting (Base + ~400 New Fixtures)	$ 1,148,746	$ 107,477	$ 27,942	8.5	1,463,739	-300	0	0	$ 70,000
1.1	Lighting ADD (1030 New Panels vs Troffer Retro.)	$ 86,913	$ 1,879	$ -	46.3	24,943	0	0	0	$ -
1.2	Lighting (DOC Implemented Savings-Ext + 32/28W)	$ -	$ 20,781	$ 946	-	275,915	0	0	0	$ -
2	Lighting Controls	$ 18,661	$ 303	$ -	61.7	4,019	0	0	0	$ 161
3.1	CNG Conversion (incl. site work, lines, Bldg K & Kit)	$ 924,167	$ 350,949	$ 128,827	1.9	304,965	-90,483	0	90,483	$ 12,199
3.2	New Steam in Plant - Kewanee (+ 1-350 hp Blr)	$ 1,696,897	$ 53,173	$ 23,298	22.2	177,141	4,322	0	0	$ 7,086
3.3	New HW Plant (Conv. 800 hp CB; 2 new 350 hp Blrs)	$ 3,428,949	$ 159,299	$ 23,298	18.8	755,180	11,113	0	0	$ 30,207
4.1	New HW distribution piping	$ 9,570,341	$ 22,277	$ 21,206	220.1	0	2,417	0	0	$ -
4.2	New CHW distribution piping	$ 3,601,918	$ -	$ 21,206	169.9	0	0	0	0	$ -
5	Water Conservation - Base w/o non-inmate areas	$ 2,721,734	$ 310,359	$ -	8.8	0	5,432	35,832	0	$ -
5b	Domestic Water Housing Unit PRV Replacements	$ 129,172	$ -	$ -	-	0	0	0	0	$ -
6	Central Chilled Water Plant Upgrades	$ 3,342,834	$ 66,995	$ 28,847	34.9	889,537	0	0	0	$ 35,581
6a	Cooling Towers Replacement (S/S basin)	$ 989,572	$ 3,766	$ -	262.8	50,000	0	0	0	$ 2,000
7	Building Automation System (BAS) Upgrade	$ 1,727,432	$ 73,558	$ -	23.5	347,912	5,138	0	0	$ 13,916
	DOC Energy Consultant Fee	$ 1,175,496			-					
	Installation Total	**$ 30,562,832**	**$ 1,170,814**	**$ 275,568**	**21.1**	**4,293,351**	**-62,362**	**35,832**	**90,483**	**$ 171,150**

Owner Controlled Contngency:	$ 150,000		
LESS Energy Related Savings (lump sum):		$ 595,000	Annualized Amount
Net Financed Amount:	**$ 30,712,832**		

Excess Cummulative Cashflow:	$ 38,000
NPV of Cashflow:	**$ 28,648**

Possible Act-129 Incentives:	$ 171,150
Possible PJM Permanent Cap. Redux Pmts (4 yrs):	$ 10,000
(Adjusted Owner Contingency as realized) - **Total:**	$ 331,150

Note: The table above has a placeholder for a $150,000 DOC controlled contingency fund financed by the project. TEN will also manage any realized Act 129 incentives and PJM permanent capacity reduction payments assigned to TEN as an additional credit toward SCI Houtzdale Owner Controlled Contingency. We also suggested that DOC may also wish to apply the net effect of a portion of any interest rate savings (perhaps between 3.0% & 2.9% for example) to this fund. The green highlighted area is the annual amount of Energy Related Cost Savings (ERCS) agreed upon by DOC.

The combined fuel savings for installing hot water boilers has increased to 15,435 mcf / year through the selection of more efficient 3-pass design for hot water boilers. The combined electric savings remains 932,321 kWh/ year. The portion of savings applicable to ECM 3.2 Steam Plant are 28% fuel (4,322 MCF) and 19% electric (177,141 kWh) and the portion of savings applicable to ECM 3.3 Hot Water Plant are 72% fuel (11,113 mmBtu) and 81% electric (755,180 kWh). The water savings for ECM 4.1 (1,577 kGal) and ECM 4.2 (526 kGal) are not shown in the ECM summary or cashflow as they exceed the dollar savings available under the minimum daily usage provision of the current water authority agreement. Additional savings may be realized when the agreement is renegotiated beginning October 2028.

The O&M savings have been calculated for lighting material savings from installing equipment with longer operational lifetimes, while O&M savings for all other ECMs are based on DOC documented costs for items such as ash removal, bag house filters, chemical treatment, boiler, chiller and air compressor repairs as well as HW and CHW distribution system repairs. The O&M savings are further defined later in the section. The PenElec Act-129 incentives and potential PJM permanent capacity reduction payments are modeled to be paid to TEN and applied to owner controlled contingency. The exact amount of these incentives and payments is not guaranteed and will be determined after measurement and verification activities have occurred to determine the level of savings applied to these incentives. While the aggregate savings for central plant ECMs has been captured, there is some

flexibility as to which ECMs they are applied. ECM costs vary by the distribution of fixed projects against the overall project size.

Annual Financial Projections

The cash flow illustrates that the proposed project will pay for itself within 19 years after construction when modeled at a 3.0% interest rate, and 1% energy and maintenance rate escalation. The columns in the cash flow represent the following:

A. Annual energy costs without improvements
B. Annual energy costs with improvements
C. Annual energy cost savings (A-B)
D. Annual O&M Savings
E. Total Annual Energy and O&M Savings (C+D)
F. Payments for financing equipment
G. Energy Related Cost Savings (ERCS)
H. Payments for monitoring and maintenance services
I. Net annual benefit (annual savings – financing payments + ERCS – M&V)
J. Cumulative cash flow

DOC Selected Project Cash flow (20 years including 12 months construction)

Year	Annual Energy Costs (Before)	Annual Energy Costs (After)	Annual Energy Savings	O&M Savings	Total Annual Savings	Annual Financing Payments	Energy Related Cost Savings	Other Payments (M&V)	Net Annual Benefit	Excess Cumulative Cashflow
	A	B	C=A-B	D	E=C+D	F	G	H	I=E-F+G-H	J
0	$ 3,927,869	$ 3,523,030	$ 404,839	$ 142,798	$ 547,637	$ 547,637	$ -	$ -	$ -	$ -
1	$ 3,967,148	$ 2,952,510	$ 1,014,637	$ 275,568	$ 1,290,206	$ 1,863,205	$ 595,000	$ 20,000	$ 2,000	$ 2,000
2	$ 4,006,819	$ 2,824,297	$ 1,182,522	$ 278,324	$ 1,460,846	$ 2,033,846	$ 595,000	$ 20,000	$ 2,000	$ 4,000
3	$ 4,046,887	$ 2,852,540	$ 1,194,347	$ 281,107	$ 1,475,455	$ 2,048,455	$ 595,000	$ 20,000	$ 2,000	$ 6,000
4	$ 4,087,356	$ 2,881,065	$ 1,206,291	$ 283,918	$ 1,490,209	$ 2,083,209	$ 595,000	$ -	$ 2,000	$ 8,000
5	$ 4,128,230	$ 2,909,876	$ 1,218,354	$ 286,757	$ 1,505,111	$ 2,098,111	$ 595,000	$ -	$ 2,000	$ 10,000
6	$ 4,169,512	$ 2,938,975	$ 1,230,537	$ 289,625	$ 1,520,162	$ 2,113,162	$ 595,000	$ -	$ 2,000	$ 12,000
7	$ 4,211,207	$ 2,968,364	$ 1,242,843	$ 292,521	$ 1,535,364	$ 2,128,364	$ 595,000	$ -	$ 2,000	$ 14,000
8	$ 4,253,319	$ 2,998,048	$ 1,255,271	$ 295,447	$ 1,550,718	$ 2,143,718	$ 595,000	$ -	$ 2,000	$ 16,000
9	$ 4,295,852	$ 3,028,029	$ 1,267,824	$ 298,401	$ 1,566,225	$ 2,159,225	$ 595,000	$ -	$ 2,000	$ 18,000
10	$ 4,338,811	$ 3,058,309	$ 1,280,502	$ 301,385	$ 1,581,887	$ 2,174,887	$ 595,000	$ -	$ 2,000	$ 20,000
11	$ 4,382,199	$ 3,088,892	$ 1,293,307	$ 304,399	$ 1,597,706	$ 2,190,706	$ 595,000	$ -	$ 2,000	$ 22,000
12	$ 4,426,021	$ 3,119,781	$ 1,306,240	$ 307,443	$ 1,613,683	$ 2,206,683	$ 595,000	$ -	$ 2,000	$ 24,000
13	$ 4,470,281	$ 3,150,979	$ 1,319,303	$ 310,517	$ 1,629,820	$ 2,222,820	$ 595,000	$ -	$ 2,000	$ 26,000
14	$ 4,514,984	$ 3,182,489	$ 1,332,496	$ 313,622	$ 1,646,118	$ 2,239,118	$ 595,000	$ -	$ 2,000	$ 28,000
15	$ 4,560,134	$ 3,214,313	$ 1,345,821	$ 316,759	$ 1,662,579	$ 2,255,579	$ 595,000	$ -	$ 2,000	$ 30,000
16	$ 4,605,735	$ 3,246,457	$ 1,359,279	$ 319,926	$ 1,679,205	$ 2,272,205	$ 595,000	$ -	$ 2,000	$ 32,000
17	$ 4,651,793	$ 3,278,921	$ 1,372,872	$ 323,126	$ 1,695,997	$ 2,288,997	$ 595,000	$ -	$ 2,000	$ 34,000
18	$ 4,698,311	$ 3,311,710	$ 1,386,600	$ 326,357	$ 1,712,957	$ 2,305,957	$ 595,000	$ -	$ 2,000	$ 36,000
19	$ 4,745,294	$ 3,344,827	$ 1,400,466	$ 329,620	$ 1,730,087	$ 2,323,086	$ 595,000	$ -	$ 2,000	$ 38,000

NPV of Cashflow (column H): $28,648

Note: The cash flow table above assumes that construction period energy savings worth $531,207 (from 6 months of ECM 1 – lighting and ECM 2 – lighting controls) and (early ECM 3a – CNG Conversion) are applied toward the principal balance at the onset of the repayment period. Along with water conservation, these ECM's will occur at the beginning of construction to maximize construction period savings. While early water conservation is important, due to the billing structure, the billing savings are gradually introduced in year 1. The payments in column F of the cash flow reflect the repayment of $905,449 in capitalized interest cost based on a twelve (12) month construction period. All energy and maintenance savings are escalated at 1% per year.

Additional Project Funding (not factored into the cash flow)

- PJM Permanent Capacity Reduction Payments. (Determined by annual auction price and paid out over four years.) TEN will prepare the necessary documentation for this additional funding stream and present them to DOC for signature and submission.
- PPL Act-129 Incentive Payments. TEN will prepare the necessary documentation for this additional funding stream and will submit to PenElec on DOC's behalf. Realized Act-129 incentives assigned to TEN will be managed as an additional owner-controlled contingency. As of the date of publishing this Report, Penelec has temporarily suspended the program. Estimates of rebates are based upon incentive rates in 2019.

Historical Utility Data

The following tables summarize utilities as provided for the IGA supplemented with additional information. This information was analyzed to aid in identifying areas for energy savings and to ensure we did not over-project savings in any one area. The total area and costs were derived from the utility usage reports provided. Utility rates used to quantify energy or water / sewer savings were based on calendar year 2018 except for water. Water consumption and rates are based on the three-year average from 2016 to 2018. The resulting analysis also served as the starting point for bottom-up and top down savings calculations. Note – These historical values are illustrative and vary slightly from the M&V baselines which reference the PSFEI reports in Part 3 and Appendix A of the contract schedules located at the end of the IGA.

SCI Houtzdale - Historical Utility Costs							
Area	Electric Cost	Water*	Sewer	Fuel Oil	Coal	Propane	Total
Sq Ft.	$	$	$	$	$	$	$
520,720	$ 798,981	$ 1,647,382	$ 772,152	$ 1,005,046	$ 94,180	$ 32,286	$ 4,223,561

Savings calculations can be found in Appendix A.

SCI Houtzdale - Historical Utility Consumption							
Area	Electric	Water*	Sewer	Fuel Oil	Coal	Propane	Total
Sq Ft.	MMBtu	kGal	kGal	MMBtu	MMBtu	MMBtu	MMBtu
520,720	37,326	117,957	119,176	65,295	22,992	2,484	128,097
Btu/Sq.Ft. Gal/Sq.	71,682	227	229	125,393	44,154	4,771	246,000

* Water kGal and Cost is based on a three year average from 2016 to 2018

SCI Houtzdale - Historical Fuel Consumption and Steam Production Summary					
Coal Usage (Tons)	Steam from Coal (Lbs)	Oil Usage (Gal)	Steam from Oil (Lbs)	Total Steam (MLbs)	Fuel Input (MMBTUs)
958	**20,223,251**	**467,728**	**50,351,415**	**70,575**	**88,287**

The tables above determine the raw Energy Usage Index (EUI) for steam, fuel oil, coal and electricity, as well as annual gallons / sf for water / sewer. Steam is currently used at the central plant to produce hot water. Hot water from the central plant is used for heating and domestic hot water production. Direct users of steam are primarily the kitchen, laundry and the HVAC units serving these areas.

Electricity consumption for most of the facility is billed based on a single meter therefore, electricity consumption is not metered per building. The billing rate from Penelec is based on the terms and conditions of the General Service Primary PN-GPD rate tariff. The electric tariff includes charges for demand (kW), reactive power (rkVA) and energy (kWh). Electric commodity charges for energy only are provided by a separate supplier.

Major consumers of electricity at the facility include lighting, chilled water production and HVAC fans. All these areas are address in the core ECMs of this analysis.

Fuel oil and coal are used in steam production. The steam is metered at the central plant;individual buildings or end uses are not metered. Propane is currently used at the facility in the kitchen and in Housing unit K. Propane use was not analyzed for this proposal.

The core ECM savings on the following pages are based on this analysis.

Water and sewer charges represent the biggest utility expense for SCI Houtzdale. However, due to the purchase agreements for the utilities, the savings potential is limited.

Project Monitoring and Maintenance Services

The measurement and verification of the proposed ECMs is anticipated to be conducted according to the M&V plan identified on page 70. Onsite measurements, field work and report generation will be prepared by Wayne Chase and overseen by Greg Lok both of whom are Certified Measurement and Verification Professionals (CMVP). The proposed M&V plan is primarily based on IPMVP option C.

It is anticipated that DOC will incorporate the upgraded systems into their existing preventative maintenance routines. TEN's project management team will be available to facilitate warranty claims or repair work as necessary. Project training will be scheduled during the construction period.

Energy Conservation Measure Scope of Work Descriptions

The table below delineates the cost and savings for the remaining developed ECMs. The following pages describe the scope of work and suitability of all the proposed ECMs.

Additional Energy Conservation Measures Evaluated and Available for Inclusion are:

ECM #	Additional ECMs Energy Conservation Measure Description	Install Cost or Cost Delta (ECM 3.2a)	Annual Energy Savings ($)	Annual O&M Savings ($)	Simple Payback	Annual kWh Savings	Annual Nat Gas (MCF)	Annual Wtr/Swr (kGal) Savings	Annual Coal / Gas Savings (MMBTU)	Annual SPB Shortfall (Potential ERCS)
3.1a	CNG Station Snow Melt - Option #1 (2,700 s.f)	$ 288,702	$ -	$ -						$ 20,189
3.1b	CNG Station Snow Melt - Option #2 (5,400 s.f.)	$ 507,544	$ -	$ -						$ 35,493
3.2a	Add to New Stm Plant - All new boilers (2-350 hp Blrs)	$ 637,718	$ -	$ -						$ 44,596
6b	Arc Flash / Short Circuit Study	$ 78,968	$ -	$ -						$ 5,522
8	Roof Modifications	$ 6,737,440	$ 30,756	$ -	219.1		3,337			$ 440,394
10	Kitchen HVAC Modifications	$ 254,277	$ 12,115	$ -	21.0	50,112	905			$ 5,667
11	AHU Coil Cleaning & Restoration	$ 1,285,278	$ -	$ -						$ 89,876
12	Domestic Water Pumps Replacements	$ 117,689	$ 4,162	$ -	28.3	55,259				$ 4,068
13	Visitor's Lot EV Charging Station (Qty-2 ports)	$ 137,092	$ -	$ -						$ 9,587

Note: Inclusion of a CNG station snow melt system and / or EV charging station will require an M&V savings adjustment to account for natural gas and electric usage. EV charging is also eligible for a $9,000 DEP rebate. The EV charging cost is primarily associated with getting suitable power to the visitors lot.

The additional ECMs available for consideration were not included in the current DOC selected project due to their long payback. It is important to note that several levers are available to incorporate these options within the project or reduce the required Energy Related Cost Savings in the current selected project. In particular, DOC may consider increasing owner-controlled contingency or adding certain already developed ECMs to the final GESA if the quoted interest rate is lower than currently modeled.

Potential levers to include additional ECMs or reduce Energy Related Savings include the following:

A. Lower project interest rate
B. Identify additional O&M savings
C. Improved competitive CNG natural gas rate or competing fuel
D. Utilize excess positive cash flow
E. Additional utility rate escalation
F. Loan payments made annually-in-advance

Utility Rebates

PennElec offers rebates through the State's Act 129 legislation for reductions in electrical energy consumption created by the installation of newer, more efficient equipment or material changes that results in more efficient operations (e.g., new controls and strategies). The selected project provides opportunities to take advantage of this funding and assign it to TEN to be used as additional "owner controlled contingency" for the GESA project. On past Commonwealth GESA projects, we account for these funds and the associated increase in project scope through no cost change orders approved by the Agency. TEN will provide the necessary paperwork and services to receive funding, if approved by PennElec.

TEN anticipates the following ECMs to be eligible for funding; any amounts will be finalized once submitted and approved by PennElec after contract signing. Note that as of this published date, Penelec has suspended their rebate program with no definitive re-instatement date. This could affect rebate amounts and timing of receipt of rebates.

ECM	Description	Amount	Notes
1.1	LED Lighting Upgrades	$70,000	All qualifying lamps and fixtures
1.2	Lighting Controls	$161	All qualifying controls
3.1	CNG Conversion	$12,199	Removal of coal processing equipment
3.3	New Hot Water Plant	$37,293	Less pumps; VFDs
6	Central Chilled Water Plant Upgrades	$37,581	New Chillers, less pumps; VFDs
7	BAS Upgrades	$13,916	Reduced cooling and fan operation
	TOTALS	$171,150	

Also, note that some rebates will be submitted as "custom" rebates. These will require more detailed information including engineering calculations and field measurements. Custom rebates that have weather dependent savings often require measurements over a range of ambient temperatures that may span over several months. Thus rebates may not be received for several months after the installation is complete. Rebates have been estimated based upon $0.04 -$ 0.05/kWh saved and are subject to program changes by PennElec. A $4,500 per plug rebate is available through DEP for the optional ECM 13 - EV charging station.

Operations and Maintenance Impact

Besides energy savings, the upgrades to the infrastructure at Houtzdale will result in cost reductions involving the operations and maintenance (O&M) of associated equipment and systems. In consultation with SCI staff, TEN has reviewed historical costs for heating and cooling equipment over a three year span. Given that much of the equipment is original and over 25 years old, the O&M costs have increased over time. Additionally, the removal of the coal-based heating system eliminates costly O&M needs. The costs for repairs, service contracts and maintenance that can be eliminated are accounted for in this assessment.

Additional O&M savings are accounted for with the upgrade to the lighting systems. However, this accounting is done by calculating the impact of new, longer life equipment utilizing the hours of operation from our audit, market-based costs of materials, and industry accepted operational life for existing and new equipment. No labor savings are associated with lighting O&M calculations.

The following table summarizes the O&M reductions resulting from the work to be done in this GESA project. The figures have been reviewed and agreed upon by the Houtzdale Facilities and Management staff:

Year 1 Operation and Maintenance Savings

ITEM	Value	From	To	Value Used	ECM Applied	Notes
LED Lighting Upgrades				$27,942	1	Calculated value
Lighting Controls				$946	2	Calculated value
Ash removal	$ 108,498	Jan-16	Dec-18	$36,166	3.1	Average over 3 years
Micronizer Maintenance	$ 130,747	Jan-16	Dec-18	$65,000	3.1	Based upon full rebuild each year which didn't occur during evaluation period assuming upcoming GESA
Bag House Filters	$ 35,110	Jan-16	Dec-18	$11,703	3.1	Average over 3 years
Water Treatment Chemicals	$ 47,431	Jan-16	Dec-18	$7,905	3.1	Average of 50% of amount due to leaks being eliminated
Chiller Repairs	$ 86,541	Jan-16	Dec-17	$28,847	6	Average over 3 years; Does not include any repairs in 2018
Boiler Repairs	$ 139,785	Jan-16	Dec-18	$46,595	3.2 & 3.3	Average over 3 years; New data provided by BN for boilers; split evenly between ECMs
Air Compressors repairs & service	$ 24,156	Jan-16	Dec-17	$8,052	3.1	Average over 3 years; Does not include any service/repairs in 2018
CHW & HW Leaks	$ 127,233	Jan-16	Dec-18	$42,411	4.1 & 4.2	Average over 3 years; includes both labor plus materials; split evenly between ECMs
TOTAL	**$ 699,501**			**$275,568**		

Energy Related Cost Savings (ERCS)

SCI Houtzdale Bldg List / ERCS Table			ECM	ECM	ECM	ECM	ECM	ECM	ECM	ECM	ECM
Quantity	Bldg Use	Name	1	3.1	3.2	3.3	4.1	4.2	5 & 5b	6	7
		(per drawings)									
1	Administration	Building #1	Ltg				Htg Loop	Clg Loop			BAS/ATC
2	Visitor Intake	Building #2	Ltg				Htg Loop	Clg Loop			BAS/ATC
3	Health Services	Building #3	Ltg				Htg Loop	Clg Loop			BAS/ATC
4	Dining Services	Building #4	Ltg	CNG Conv.	STM Plant		Htg Loop	Clg Loop			BAS/ATC
5	Receiving/Laundry/Maint.	Building #5	Ltg	CNG Conv.	STM Plant		Htg Loop	Clg Loop			BAS/ATC
6	Correction Indusdries	Building #6	Ltg				Htg Loop				BAS/ATC
7	Chapel / Offices	Building #7	Ltg				Htg Loop	Clg Loop			BAS/ATC
8	Classroom/Library	Building #8	Ltg				Htg Loop	Clg Loop			BAS/ATC
9	Vocation Labs	Building #9	Ltg				Htg Loop	Clg Loop			BAS/ATC
10	Gym / Exercise	Building #10	Ltg				Htg Loop	Clg Loop			BAS/ATC
11	Fieldhouse	Building #11	Ltg				Htg Loop				BAS/ATC
12	Sally Port	Building #12	Ltg				Htg Loop	Clg Loop			BAS/ATC
13	Warehouse	Building #13	Ltg				Htg Loop				BAS/ATC
14	Central Plant	Building #14	Ltg	CNG Conv.	STM Plant	HW Plant	Htg Loop	Clg Loop		CW Plant	BAS/ATC
15	L3 Housing Unit	Building - A	Ltg				Htg Loop	Clg Loop	Wtr		BAS/ATC
16	L3 Housing Unit	Building - B	Ltg				Htg Loop	Clg Loop	Wtr		BAS/ATC
17	L3 Housing Unit	Building - C	Ltg				Htg Loop	Clg Loop	Wtr		BAS/ATC
18	L3 Housing Unit	Building - D	Ltg				Htg Loop	Clg Loop	Wtr		BAS/ATC
19	L3 Housing Unit	Building - E	Ltg				Htg Loop	Clg Loop	Wtr		BAS/ATC
20	L3 Housing Unit	Building - F	Ltg				Htg Loop	Clg Loop	Wtr		BAS/ATC
21	L2 Housing Unit	Building - G	Ltg				Htg Loop	Clg Loop	Wtr		BAS/ATC
22	L5 Housing Unit	Building - H	Ltg				Htg Loop	Clg Loop	Wtr		BAS/ATC
23	L4 Housing Unit	Building - I	Ltg				Htg Loop	DX-N/A	Wtr		BAS/ATC
24	L4 Housing Unit	Building - J	Ltg				Htg Loop	DX-N/A	Wtr		BAS/ATC
25	L2 Work Release	Building - K	Ltg	CNG Conv.			Bard-N/A	Bard-N/A	Wtr		BAS/ATC
Applicable Buildings			**25**	**25**	**4**	**3**	**1**	**24**	**19**	**11**	**1**	**25**
Applied Annual ERCS						$ 47,368	$ 15,789	$ 269,000	$ 180,000	$ 6,000	$ 15,789	$ 61,053
Applied Total ERCS						$ 900,000	$ 300,000	$ 5,110,993	$ 3,420,000	$ 114,000	$ 300,000	$ 1,160,007
Applied Total / Bldg						$ 300,000	$ 300,000	$ 212,958	$ 180,000	$ 10,364	$ 300,000	$ 46,400

Totals
$ 595,000
$ 11,305,000

Project Conditions

This document details the scope of work for the measures listed in the selected project ECM summary table, as well as some measures evaluated but not selected.

The Contractor may propose modifications and changes the schedule from time to time, in accordance with actual performance conditions. The project schedule shall be subject to Owner approval and may be adjusted per the Owner's requirements. TEN will inform DOC if Owner requested changes have a cost impact to DOC.

Our solution is to work closely with SCI Houtzdale and DOC to understand the operational procedures of the facility and then develop an accurate schedule to fully abide by the security requirements, tool control, manifesting tools, equipment, and personnel inside the secure perimeter. We plan on storing our equipment, gang boxes, and tools in the pre-approved secured work areas. Tools will be secured in facility approved lockboxes with tool inventories or will be checked in/out daily as needed. We have anticipated having one centralized location inside and one centralized location outside the perimeter fence for mobilizing our daily activity. The Contractor shall provide "Contractor Tool Inventory" and completed "Clearance Check Form" in advanced prior to going on site to perform work.

The Contractor shall provide all penetrations as required to install equipment and piping associated with the work outlined in this scope of work. All penetrations shall be performed in a professional, neat, and workmanlike manner. The Contractor shall provide required patching, fire stopping, painting, and repairs required to restore any areas worked upon or damaged to match surrounding conditions.

The contractor is not responsible for correcting any pre-contract code or hazardous material issues. The contractor will notify the Owner of any code violations or hazardous material discovered in the course of performing the work.

Parking will be limited to the public access parking areas or DOC designated areas near the central plant or CNG station. There will be NO parking in or around the work areas; this includes work and delivery vehicles. All required deliveries must be coordinated in advance and shall be limited to that time to make the actual delivery.

Two (2) copies of full-project Operation and Maintenance (O&M) manuals and electronic copies for all major material and equipment supplied by the Contractor and shall be provided upon project completion, and prior to full-project final completion. Interim O&M manuals will be provided prior to Substantial Completion of individual ECMs during construction.

Overall Assumptions and Exclusions:

The following general assumptions and exclusions apply to all scopes except where explicitly included in the ECM Descriptions.

1. It is understood that each new system will be installed according to design drawings and the applicable Code. Code compliance is limited to only the actual work installed by TEN or its Subcontractors.
2. In the case of conflict between this scope of work and the TEN design drawings, the design drawings will govern.
3. All equipment selection is subject to modification following the completion of the design. This includes manufacturer and model selection. TEN reserves the right to provide "or equal" equipment during the submittal process if such product substitutions are acceptable to the Design Consultant and/or Funding Agency. TEN will be responsible for preparing any submittal data requested to compare the products and will account for the project savings adjustments and credits that may result from such substitutions.

4. Full access, escorts, and parking to be provided by the owner. The cost of escorts provided by the owner has not been included in the project based on decisions at planning meetings with Houtzdale.
5. Existing controls, valves, dampers, safeties and wiring, not specifically identified in TEN's scope of work but connected to the BAS in the immediate work area, will be evaluated during construction. Any deficiencies found will be noted and brought to DOC attention for DOC repair.
6. TEN has included an agreed upon allowance ("Client Contingency"), which will increase based on realized utility incentives / rebates. With DOC approval, additional Contingency may be allocated from any cost savings from interest rate reduction at project inception.
7. TEN has not included in the scope or cost replacement of defective electrical wiring or bringing any existing wiring up to current code unless explicitly included in the scope. TEN has investigated and determined that the existing panelboards, at the time of inspection, were sufficient for the added electrical loads. However, as TEN cannot control any loads added since our survey, TEN will advise PA DOC accordingly if the electrical system is insufficient at the time of installation. Design survey will determine if scope specific additional circuit grounding or environmental protection will be required for proper installation of new equipment and note same in design documents for execution by TEN or Subcontractor installers at an additional cost to DOC.
8. Except as specifically noted and included in the scope, we have assumed that the existing structure and load bearing capability are consistent with existing design documents. Survey limited to accessible visual spot verification of structural components. Any deviations will be reported to DOC.
9. All existing hydronic (domestic and heating) and steam piping that is reused is assumed to be in good condition and will last the term of TEN's contract. Any deficiencies found will be noted and brought to PA DOC's attention before continuing with work in that area.
10. The area outside of Building 5 pump mechanical room and near the central plant / warehouse will be utilized as an equipment/material storage/layout area. TEN responsible for securing area with fencing and locks.
11. No HAZMAT abatement beyond lamp and ballast recycling are included in this scope of work. Should TEN or its subcontractors encounter suspected HAZMAT material, subcontractor will immediately stop work and notify Houtzdale/DOC of situation. Work will not start until officially notified by Houtzdale/DOC.
12. Subsurface investigations limited to areas requiring digging or disturbance for purposes of installation or destructive demolition work.

ECM 1 – Lighting

Existing Conditions

A detailed lighting audit was conducted at the State Correctional Institute Houtzdale, located in Pennsylvania. The primary interior lighting consists of a wide range of fluorescent lighting technologies, primarily including 2nd generation energy efficient 28w lamps. The higher efficient 28w lamps are being installed as the older 1st generation lamps and ballasts fail. First generation T8 linear lamps and electronic ballasts, T12 high output linear lamps, and magnetic ballasts are present in a small percentage of the existing lighting system. Incandescent and fluorescent screw-in medium based lamps and plug-in fluorescent lamps are also prevalent to the facilities interior. The exterior site lighting, building façades, and high mast lighting consists of multiple types of highly efficient LED luminaires and retrofit kits. The exterior luminaires, located outside of the perimeter fence, have already been converted to high efficiency LED kits and will not be considered for replacement.

Proposed Improvements

High Efficiency LED Lighting Upgrade

To maximize the overall electric savings, TEN proposes to optimize the existing lighting systems for most interior areas. This will help to achieve a cost effective, long-life, and high efficiency lighting system. The project scope includes the following:

Outside Perimeter HID Solutions

- SCI Houtzdale has been very proactive in upgrading the current exterior lighting system for the inside perimeter campus. The high mast lighting and building façade lighting has been converted to LED retrofit insert kits. The staff and visitor parking lot pole lighting for the process administration building also has been upgraded with LED retrofit kits. This was an economical approach as these retrofit kits utilize the existing housing of the luminaires by reducing material and labor costs for installation. The central plant and adjacent buildings façade lighting has recently been replaced with LED retrofit kits by the SCI Houtzdale and will not be included in our scope However, this lighting will account for the increased savings and will apply to the proposed savings analysis.
- The Central Plant has existing 400w high pressure sodium high bay luminaires located in the boiler plant open area, coal storage room, and micronizer (coal pit) room. TEN will replace these with a new high efficient LED high bay luminaire with better color rendering and improved lighting distribution. Also, in the event of a temporary power outage or brief shut down of the new LED luminaires, once power is restored, the proposed fixtures will illuminate instantly and will not require a cool down period for restart as what happens with all HID lamps.

Interior lighting solutions; *Inmate Housing Units; Education Center; Main Operations Building; Process Administration Building.*

There are three main component areas in-regards to this site that are included in our lighting scope. The inmate housing units (both open dorm style and individual cell units), administrative and operations, and exterior central plant with surrounding buildings. The recommended approach to each of these buildings or common areas are as follows;

Proposed Lighting Solutions

1. The predominant lighting in most interior areas consists of linear fluorescent technology. In areas where existing linear fluorescent T8 lamps and luminaires are serviceable and in good working order, will be retrofitted with a TYPE "C" TLED highly efficient 12w linear LED lamp with external driver lighting system.
2. The classrooms located in the education center have 8' foot vapor tight fixtures with T12 linear lamps and standard magnetic ballasts. TEN will replace these with a new, highly efficient LED vapor tight luminaire. These fixtures have a system life rating of 84,000 hours. Based on 10 hour/day operation, the life expectancy for these vapor tight luminaires should exceed 32 years of use. For safety the proposed new LED luminaires will have tamper resistant Torx® T10 screws for security as well as a polycarbonate shatter proof lens.
3. The three inmate dining halls and the staff dining hall each have large cylinder HID luminaires that will be replaced with a new LED high bay that is IP66 waterproof rated and meets the requirements for NSF for food processing requirements.
4. The main kitchen which serves all of the inmate dining and staff dining halls currently have 4' foot vapor tight T12 high output linear fluorescent lamps. TEN will replace with a new 4' high efficient LED vapor tight using the same manufacturer as specified in the classrooms. These will have the same security Torx® T10 screws and polycarbonate lens.
5. The main gymnasium has 400-watt metal halide high bay fixtures. TEN will replace with a new, highly efficient LED high bay luminaire that has a lifespan rating of 100,000 hours. Its construction is diecast aluminum with a tempered glass lens, which is extremely durable and impact resistant for an athletic facility of this type.
6. The open area of the central plant and the auto shop have 400-watt metal halide high bay fixtures. TEN will use the same approach to replace the existing HID high bay fixtures but with a more traditional style LED high bay design. The proposed LED high bay is a 200-watt lamp with a polycarbonate refractor and bottom lens for improved lumen output.
7. Supplemental lighting consists of incandescent and fluorescent plug-in lamp technology. TEN proposes to retrofit these with new highly efficient LED screw-in type lamps for all medium base applications and a direct-wire ballast bypass for all quad pin-based applications.
8. During the IGA audit / design phase, TEN was able to inventory every space where access was permitted and accounted for 99% of all rooms. Counts of fixtures were provide by the armory representative as access was not allowed. There were only a few small rooms which department personnel would have keys but were not available during our site visits. The total number of fixtures inventoried increased by a total of 488 above the original RFP fixture count.
9. There are 104 "NO RETROFIT" fixtures in our current design proposal which are not included for proposed retrofit or replacement. This quantity represents existing LED exit signs which is approximately 75% of the 104 fixtures, with the remaining 25% make up of LED fixtures that were upgraded by SCI Houtzdale prior to our audit design walkthrough. There are 1,298 cell fixtures with a 7watt compact fluorescent PL nightlight lamp. TEN calculated the replacement costs and savings associated with upgrading to a new LED 3.5w plug in lamp. The payback was very long due to proposed lamp cost and minimal savings reduction. They are not considered for replacement in our scope.
10. **In an additional retrofit option** ("ECM-1a"), TEN proposes to replace (1030) recessed linear fluorescent 2x4 troffers with a new highly efficient LED edge-lit panel luminaire. This provides a cleaner look with a solid construction flat panel design. This will eliminate all the different lens type fixtures (prismatic, parabolic, and microcell) and standardize to one type lens and simplify the aesthetics. Flange and surface mount type 2x2 and 2x4 fixtures will be retrofitted with TLED lamps and external drivers. The flat panel design also provides a safety component since lamps are not accessible. **(included in DOC selected project)**

Other elements of the proposed solution include:

(Type C): Direct Wire - Separate Driver

The Driver is located separately from the LED tube, much like a fluorescent ballast. In this manner, the lamps are lighter, and the driver and LEDs operate cooler with maximum efficiency and safety. Existing ballasts are eliminated as a potential future maintenance requirement. This is our approach to all linear retrofit applications. TEN is specifying GE's LumenChoice Type C LED Tube and Driver System. This will allow one lamp that will operate on several lumen choices to achieve 5 levels of light output via the selectable LED Driver. There are now only two drivers to choose from, a 1 and 2 lamp option and a 3 and 4 lamp option. Each of the two driver options has 5 dipswitches that that allows for different levels of light output. This lamp and driver system reduces the need for inventory and having to stock multiple lamp profile specific drivers.

ECM 1a – Baseline Lighting Consumption and Proposed Savings

Option 1 (Type "C" Option Proposed, Base + 488 Additional Fixtures)

Building	Total kWh Savings	Total kW Savings	Existing Ltg kWh	Proposed Ltg kWh	Existing Ltg kW	Proposed Ltg kW	Addl. Clg. Sav. kWh	Addl. Clg. Sav. kW
SCI HOUTZDALE	1,497,969	290	2,275,143	852,106	503	197	71,332	14
SCI HOUTZDALE (OUTSIDE FENCE)	207,709	29	316,187	118,788	50	19	9,891	1
Total	**1,705,678**	**319**	**2,591,330**	**970,894**	**553**	**216**	**81,223**	**15**

Note: Total lighting kW savings are based on **$ 0.0726**

Note: based on assumed 32w 4' linear fluorescent at time of design

Opton 1.1 Add (1030 New LED Panels vs. Troffer Retro.)

Building	Total kWh Savings	Total kW Savings	Existing Ltg kWh	Proposed Ltg kWh	Existing Ltg kW	Proposed Ltg kW	Addl. Clg. Sav. kWh	Addl. Clg. Sav. kW
SCI HOUTZDALE	1,522,563	296	2,275,143	827,929	503	191	72,503	14
SCI HOUTZDALE (OUTSIDE FENCE)	208,058	29	316,187	118,437	50	19	9,908	1
Total	**1,730,621**	**325**	**2,591,330**	**946,366**	**553**	**209**	**82,411**	**15**

Note: Total lighting kW savings are based on **$ 0.0726**

Note: based on assumed 32w 4' linear fluorescent at time of design

Note: Total lighting kW savings have been reduced by a diversity factor of 85% applied to interior lighting.

ECM 1a – Quantity Summary of Proposed Lighting Upgrades

Option 1 (Type "C" Option Proposed, Base + 488 Additional Fixtures)

Retrofit Type	Total Fixtures	Total Unit Qty
New LED Flat Panel Luminaires	4	4
New Interior LED Luminaires	604	604
High Efficient Electronic Instant Start LED Drivers	5327	5322
TLED Linear LED Lamps 2', 3', 4' (Includes T8 & T5 TLED Lamps)		13482
Screw-in & PL LED Lamps (some fixtures have multiple lamps)	50	89
LED COB (Chip On Board) 120/277v Screw-in Bypass Lamp	490	490
New Exit Sign / Retrofit Kits	168	168
No Retrofit	104	104
TOTAL	**6747**	
No Retrofit	104	
Replacement/Retrofit	**6643**	

Opton 1.1 Add (1030 New LED Panels vs. Troffer Retro.)

Retrofit Type	Total Fixtures	Total Unit Qty
New LED Flat Panel Luminaires	1030	1030
New Interior LED Luminaires	604	604
High Efficient Electronic Instant Start LED Drivers	4301	4300
TLED Linear LED Lamps 2', 3', 4' (Includes T8 & T5 TLED Lamps)		10675
Screw-in & PL LED Lamps (some fixtures have multiple lamps)	50	89
LED COB (Chip On Board) 120/277v Screw-in Bypass Lamp	490	490
New Exit Sign / Retrofit Kits	168	168
No Retrofit	104	104
TOTAL	**6747**	
No Retrofit	104	
Replacement/Retrofit	**6643**	

Due to the expedited nature of the initial RFQ lighting audit and the time available to complete take offs from the lighting schedules provided by bulletin, we chose to compile the initial lighting audit by fixture groups by facility. During the RFQ we used stipulated hours of use based on standard operating hours for a correctional facility. In the IGA process we were able to interview and discuss space utilization with facility personnel of the actual operating hours. This helped to define usage for areas run by the facility trades personnel as well as departmental spaces occupied by correctional and administrative staff. This resulted in a reduction of our assumed hours of operation which affects kWh savings. The lighting audit line by line including pre & post fixture codes, descriptions, wattage, hours and diversity can be found in the appendix. In general savings are calculated as:

- kWh Savings = (existing fixture kW * burn hours) – (post fixture kW * burn hours)
- kW Savings = (existing fixture kW) – (post fixture kW), then reduced by a diversity factor to account for the fact that not all fixtures are 100% on at any given time.
- Additional savings are also applied for cooling and heating penalties as well as lighting controls.

The following table correlates the burn hours provided in the bulletin with the hour groups used in the line by line audit. TEN is confident this approach has yielded savings within the 95% accuracy required of the RFP.

Hour Groups	Hour Group Description	Hours
CELL	Individual Inmate / Open Dorm Holding	2912
CLASSROOM	Educational / Instructional	2600
COMMON AREA	Lobby Areas / Corridors / Vestibules	8760
CONFERENCE ROOM	Meeting Rooms/ Interview	1560
DAYROOM	Imate Housing Open Common Room	5824
DORM ROOM	Imate Housing Open Common Room	5824
ELECTRICAL MECHANICAL	Electrical-High Voltage / Mechanical-Boiler Room	520
EMERG	24 Hour / 7 Days A Week	8760
EXTERIOR	Exterior Building Façade / Parking / Walkway	4380
HIGH USE STORAGE	Areas with moderate occupancy	520
JANITOR	Custodial / Housekeeping	1456
KITCHEN	Kitchen / Dining Areas	5824
LIBRARY	Library Open Area / Offices	4056
LOW USE STORAGE	Areas with minimal occupancy	200
MEDICAL / DENTAL / TREATMENT	Health Department Areas	4368
OFFICE	Administrative Single Occupant / Open Area	3640
STAFF RESTROOM	Unisex Restroom / Single Occupant	1456
INMATE RESTROOM / SHOWER	24 Hour / 7 Days A Week	8760
NOT IN USE	Areas That Are Not In Use (Assumed Based On Space Type)	0
GYM	Athletic Facility	5824
LOCKER ROOM	Locker Room Areas	5824

Commissioning Plan

As work is completed, our documents are updated to note any changes in quantities or retrofit type. Ultimately this document becomes the as-built scope of work. Additionally, as areas are completed, TEN will walk with SCI staff to obtain approval of work utilizing a substantial completion form. A punch list will be created and followed to get a final completion form approved.

Training will be provided by TEN and will address warranty procedures as well as maintenance that may be required. Due to the long life of the product being installed, it may be some time before significant maintenance is required. TEN will deliver comprehensive operations and maintenance manuals including an electronic video of the training provided.

Operations and Maintenance Impact

Through the implementation of these retrofits, SCI Houtzdale will realize additional savings in the reduction of replacement materials, either through the extended warranties, reduced energy usage of proposed LED luminaires, lamps and drivers, as well as the increase of operating life of new equipment. PPL Utility rebate incentives can be realized (but not guaranteed) based on the proposed LED lighting upgrade as per the utility rebate incentive program and current available funds. TEN will submit for rebates on behalf of Houtzdale with intent to maximize this revenue resource.

Measurement and Verification

See Measurement and Verification section for complete information on this subject.

ECM 2 – Lighting Controls

There are two primary ways to save energy with lighting systems. The first is to make the lighting equipment more efficient, typically by using new fixtures, new lamp technology, or a combination of both. The second way is to reduce the time the lighting systems operate.

This measure seeks to reduce operating hours of select circuits by use of automatic occupancy sensing technology. This technology will be utilized in less secure areas only.

Existing Conditions

Larger spaces in low security areas tend to have long burn hours, even when the spaces themselves might not be occupied.

Proposed Solution

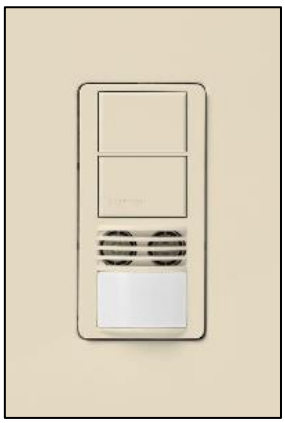

TEN recommends the utilization of occupancy sensors in select areas that can take advantage of controls without compromising security. We have selected areas that have low security requirements. These areas tend to be offices, conference rooms, or other larger rooms with intermittent occupancy patterns.

TEN will install either wall mounted (replacing wall switch) or ceiling mounted sensors. Dual technology versions use ultrasonic and infrared to ensure power savings and occupancy detection. Self-adaptive, or self-learning technology, eliminates the need for manual range adjustments.

Operations and Maintenance Impact

Each unit will be tested in all modes of operation to verify proper operation.

Training

A short training session will be conducted to orient maintenance staff on the operation and maintenance of the new units. This equipment should operate like other occupancy sensors that are available on the market.

Measurement and Verification

See the Measurement and Verification section for details on the protocols to be utilized.

ECM 3.1 – Compressed Natural Gas (CNG) Conversion

The choice of fuels to use for creating thermal energy, such as steam, is dependent on several factors. While in the past, price was the main factor, environmental factors are now just as important. Cleaner fuels, such as natural gas also have other benefits, especially the simplicity of operation. The measure calls for the conversion of the thermal plant from coal and oil to predominately natural gas.

Existing Conditions

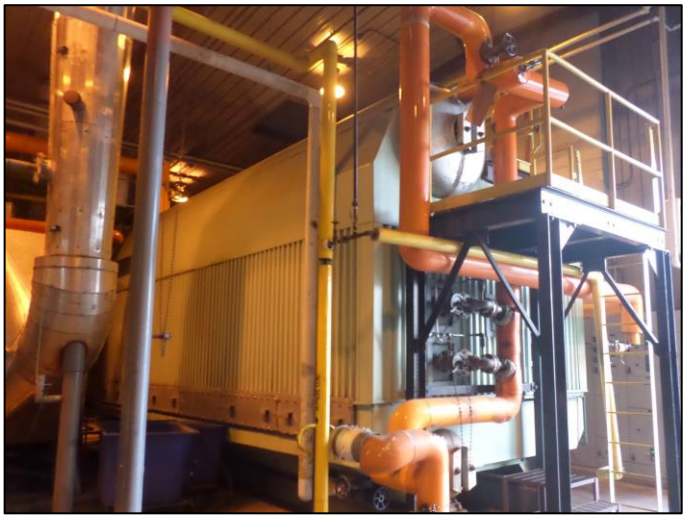

Currently, steam is required to be available 24 hours per day 365 days per year at SCI Houtzdale. The Central Boiler Plant at SCI Houtzdale contains four (4) high pressure steam boilers. The boilers produce steam for space heating, heating hot water, domestic hot water, kitchen, and laundry uses. Two 900 Boiler Horsepower (BHP) Babcock & Wilcox steam boilers are coal-fired boilers, which can also be fired on #2 fuel oil. Additionally, there are two steam firetube boilers: one 800 BHP Cleaver Brooks and one 500 BHP Kewanee. Currently, these two boilers are operated on #2 fuel oil only but are equipped with dual fuel burners which have the capability of burning natural gas. However, there is no natural gas supplied to the facility. Fuel oil for all boilers is supplied from a single 20,000 gallon above ground fuel oil tank. Coal is trucked in and stored behind the boiler plant. Coal must be processed further for use in the boilers. Additionally, the particulate that emanates from the flue must be filtered at great expense. While coal is a relatively cheap fuel, the actual costs to properly process, burn and emit the effluent is relatively high.

The Houtzdale's DEP Air Quality Permit only allows the use of coal for 90 days each year. The B&W boilers typically fire using coal during colder weather from late December to late March. When the B&W boilers are idle the two (2) firetube boilers are utilized using fuel oil.

Additionally, there is an onsite propane tank. Propane is currently used in the kitchen for cooking and in Housing Unit K for heating and domestic hot water generation.

Proposed Solution

This ECM provides for an alternate fuel source to coal and #2 fuel oil at the Central Plant and propane for the kitchen and Housing Unit K. Compressed natural gas (CNG) will be utilized as the alternate fuel.

TEN proposes to provide a truck unloading facility for the CNG fuel. The truck unloading area will be located near Stageing Road, in an existing grass area at the north end of the Prison property, separated from the other buildings on campus. The unloading facility location will be in excess of 200 feet north of the Pump House and 450 feet east of the Administration Building.

TEN will construct the CNG unloading facility for three tractor trailers complete with a surface of concrete pads, for truck areas and a small building, bituminous paving and rolled gravel. The use of a gravel base, around the concrete trailer pad foundations, could minimize requirements for drainage improvements. The facility will include concrete barriers, a security fence with gates, electrical grounding grid, electrical service panelboard, and site lighting. An underground HDPE gas line, one conduit for electrical power, one conduit for data, and one spare conduit will extend approximately 700 feet from the decompression equipment to the Central Plant. Electrical and communications will be tied into sources within the Central Plant.

The CNG supplier will provide a constant stream of trucks of CNG, natural gas decompression equipment enclosed in a packaged skid, and piping between the trucks and the decompression equipment. The decompression equipment, trucks, and fuel will all be provided under an annual compressed gas supply contract with the Prison. The decompression equipment will be capable of being monitored remotely via the Prison's Niagara Tridium system and at the CNG supplier's offices.

Gas will be regulated from a medium pressure (40 to 50 psig) to a lower pressure (10 + / - psig) at the Central Plant exterior, and feed the steam and HW boilers in the central plant, as well as feed the K Block for heating HW and domestic HW, and feed the kitchen equipment. Using gas will maintain an alternate source of fueling for boilers which can maintain the entire prison under all weather conditions, while having a backup fuel available.

CNG to Central Plant Scope

1. Contact PA One-Call to locate all buried utilities. Hire a private utility locating company to locate prison owned utilities.
2. Clear the lawn near truck staging for the CGN truck unloading area.
3. Construct the truck unloading area in accordance with Scope of Work / General Construction details provided by XNG (See Appendix).
4. Include: Additional bituminous paving with sub-base up to the gates, concrete pads for trailer parking within a gravel lot, fencing, electrical grounding grid, electrical service panelboard within a NEMA 3R enclosure, site lighting, etc, all as specified by XNG.
5. Piping from the trucks to the decompression skid as well as the decompression skid will be furnished by the gas supplier. Provide bollards at the rear of the trucks and pipe support piers for piping between the trucks and the decompression skid.
6. Provide one (1) underground 4" HDPE gas pipe and three (3) underground 2" PVC conduits from the CNG truck unloading area to the Central Plant. The gas piping and conduits would typically be installed in separate parallel trenches; each trench about 2' wide and 3' deep to top of piping/conduit. HDPE piping can withstand long term, off-road truck traffic with a burial depth of just 3 feet, however the scope will include steel casing under roads and driveways. Markers will be installed to locate each end of the lines.
7. Provide one (1) anodeless gas piping riser at each end of the HDPE gas piping. Bed and backfill around the gas piping with sand. Provide detectable underground warning tape and a locating wire above the gas line. Natural gas lines buried under roads and driveways will be in steel casing.
8. Provide detectable underground warning tape above each PVC conduit. Provide two (2) handholes along each conduit length to assist in pulling wire and PVC junction boxes at each end of each conduit. One conduit will include a fiber-optic cable. One conduit will include 4#3/0 AWG & 1#4 GRD for the 60-amp service to the improved area (wire sizes are increased for voltage drop). One conduit will be a spare.
9. Backfill and compact trench. Restore improved surfaces. Restore topsoil and grass. Conduit route passes below 25' wide Institution Drive, a 12' wide rip-rap drainage trough, one 8' wide concrete walk to the Pump House, and gravel paving between the Central Plant and the Records Building. Electrical conduit installed under roads and driveways will be encased in concrete.
10. Provide a flanged steel gas connection with shut-off valve from the decompression skid to the gas line in the trench (anodeless riser).
11. Provide a 4" lockable shut-off valve and two gas pressure regulators at the end of the gas piping at the Central Plant. Regulator should each be sized for 50,000 CFH from 50 psig inlet pressure to 10 +/- psig outlet pressure. Protect the valve and regulators with two pipe bollards. 6" Schedule 40 welded steel gas piping will be provided downstream of the pressure regulators into the Central Plant building under ECM 3.2 and ECM 3.3. Paint outdoor steel gas piping located above grade.
12. Extend the fiberoptic cable, in conduit, inside the Central Plant to the existing fiber patch panel and install Cat 6 cable from the patch panel to the computer hub in the Central Plant. Coordinate with the IT Department for an IP Address.

13. Provide a new panel "PP" and 30 kva transformer within the central plant main electrical room to serve the fuel unloading station. Provide a 3 pole, 60 A circuit breaker within panel "PP" (Rated: 100A, 120/208, 3-Phase, 4-Wire) and route 4#3/0 AWG & 1#4 GRD in a 2" conduit underground, for the 60 amp electrical service to the fuel unloading station. Panel shall include surge protection.

CNG to Building 4 Kitchen and Housing Unit K Scope

1. Disconnect and remove existing propane tank system located adjacent to Central Plant. Remove aboveground piping down to below grade. Abandon in place all existing underground propane piping.
2. After taps to the boilers, transition 6" Schedule 40 welded steel gas piping to 3" Schedule 40 welded gas piping and route to Kitchen and Housing Unit K via same path as CHW and HW piping.
3. Provide a 2" lockable shut-off valve and one gas pressure regulator at the Kitchen and K Block. Each regulator shall be sized for connected loads. Connect to the existing propane piping entering each building. Paint outdoor steel gas piping located above grade.
4. Convert each piece of propane fired kitchen equipment to natural gas using manufacturer's conversion kits. This includes three ovens and four griddles.
5. Convert 14 Bard building mounted HVAC units from propane to natural gas using manufacturer's conversion kits.
6. Replace 6 propane fired water heaters with equivalent natural gas fired water heaters.

Some degree of outage will be required in order to have necessary equipment converted to natural gas before propane service is fully discontinued.

ECM 3.1a & ECM 3.1b – Slab Heating System

(optional ECM, not in current project)

Optional Scope, ECM 3.1a: Another option for consideration is the installation of a heating system for the concrete pads. Estimated surface to be heated is 2,700 square feet with additional option for 5,400 square feet total. This heating system will act as a snow melt system to allow trucks to easily be positioned at station when snow is present. Such work shall consist of a single (or dual for 5,400 s.f), independent natural gas fired hot water boiler located in a pre-cast housing structure adjacent to CNG station. The system will consist of necessary circulation pumps, expansion tank, make up line, intake and discharge flue, controls, electrical power, lighting and space heating. System will be charged with a water-glycol mix and will operate either manually or remotely through BAS.

Savings are derived from two categories described as follows:

Fuel price differential: the overall cost per Btu (shown as $/MMBtu) is higher for the coal/oil usage compared to natural gas. Had natural gas been available in the street, the costs would be even lower. Houtzdale may from time to time explore means to have natural gas delivered directly to reduce delivery costs.

With regard to the optional slab heating, it is acknowledged that additional energy may be needed to operate the system. However, TEN has not accounted for any savings in the estimates; the increased energy use will be addressed through a base year adjustment.

Operational Costs: Coal tends to be a costly fuel when all the operational needs are added into the overall cost of operation. After delivery, the coal must be crushed down for efficient burning. This process takes energy and the equipment must be maintained at a relatively high cost. After burning, the effluent needs to be scrubbed of particulate. Again, this takes energy and additional costs to maintain the sub-system. TEN, with assistance from

Houtzdale personnel, has made an accounting of these additional costs. A three-year average (2016-2018) was used to calculate the additional operating costs associated with the coal system.

Operation and Maintenance Impact

The previous section details the additional needs of a coal burning system. Once eliminated, the costs to process and properly burn the coal is also eliminated, saving thousands of dollars per year. Natural gas is a much cleaner fuel and maintaining the boiler will be easier and more efficient.

If the optional slab heating system is selected, maintaining the small boiler, pump and other components will be completed by DOC. However, these costs are minimal and have not been included in our calculations.

Training

While the gas supplier has a responsibility to deliver the gas, TEN will train Houtzdale maintenance personnel on how to properly operate the new natural gas system, including safety. As part of ECM-3.2 and 3.3, Houtzdale staff will learn to work with the new fuel and the new boilers.

Measurement and Verification

See Measurement and Verification section for details on the protocols used for this ECM.

Exclusions

The following general relevant exclusions apply except where explicitly included in the scope of work above:

1. Premium time labor is excluded.
2. Delays due to others are excluded.
3. Concrete encasement of buried electrical conduit is included under roads and driveways only. All other areas are excluded.
4. Reduced construction period savings if CNG services is not procured quickly enough by DOC to have in place for the 2020/2021 heating season.

ECM 3.2 – Steam Plant Upgrades Using Kewanee Boiler

Existing Conditions

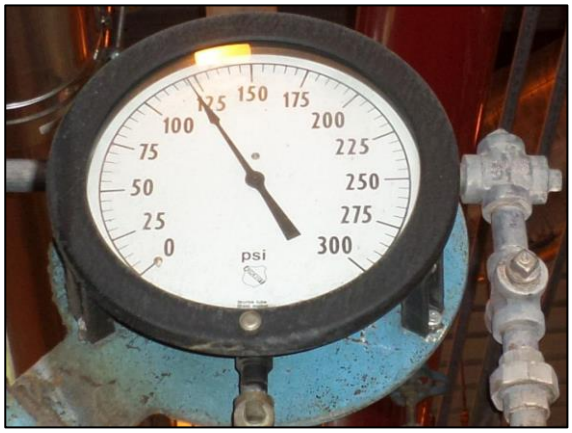

The central boiler plant consists of four steam boilers and associated ancillary equipment. Steam is generated at 120 PSI, used in the central plant in the deaerator (DA), and sent to three (3) heat exchangers to generate Hot Water for heating and domestic hot water. Steam is supplied directly via underground piping to Building 5 for use in the Laundry at high pressure and in the Dietary Building where it is reduced in pressure for use in AHUs and kitchen equipment.

The summer steam load which consists of the Laundry, Kitchen, and domestic hot water generation can be satisfied using the 500 BHP Kewanee boiler.

The boiler information is summarized in the following table:

Central Plant Boilers

Tag	Model	Size (HP)	Type	Fuel	Year Built
B #1	B & W	900	Water tube	Coal/Fuel Oil	1994
B #2	B & W	900	Water tube	Coal/Fuel Oil	1994
B #3	Kewanee	500	Fire tube	Fuel Oil	1994
B #4	Cleaver-Brooks	800	Fire tube	Fuel Oil	2009

Proposed Solution

During the RFP, TEN recommended installing two new 250 BHP Steam boilers in the pump room in building 5. The IGA phase of the project afforded the time needed to evaluate the steam needs of SCI Houtzdale and evaluate the existing steam boilers to provide the best cost solution for the facilities steam needs.

Steam will no longer be used for heating or domestic hot water generation, which greatly lowers the steam demand at the facility. The remaining steam loads for the summer will be limited to equipment in the kitchen and laundry. This includes seven steam kettles, two Hobart FT 900 dishwashers in the kitchen and the steam to hot water generator for the kitchen domestic hot water. In the laundry there are three washing machines, five dryers, one ironer and the steam to hot water generator for water heating. This equipment will be the summer steam load and in the winter AHUs AHU-28, 29,30,31 and HV-2 will need steam for their respective heating coils. Thus, all the remaining steam equipment has a connected load of approximately 350 BHP.

For this reason, TEN recommends the installation of one 350 BHP steam boiler operating natural gas with boiler controls allowing for a 10:1 turndown ratio (natural gas). The new 350 BHP steam boiler will be the primary steam boiler in the summer and shoulder seasons. The existing 500 HP Kewanee fire-tube steam boiler will remain in service and be utilized under higher load conditions or as back up.

New Steam Boiler Demolition Scope

1. Demolish and remove the two (2) existing B&W coal-fired steam boilers, concrete support pads, economizers, and all associated appurtenances per drawing MD-101.
2. Remove all emissions equipment located on the west side of the Utility Plant including baghouses, stacks, silos, electrical, etc. Concrete foundations may remain.
3. Abandon the coal handling equipment located within the east side of the utility Plant. Clean-up by SCI staff.

New Steam Boiler Installation Scope

1. Retain Kewanee boiler and install one (1) 350 HP 3-pass, wet back, scotch marine design Superior "Super Seminole" or equal steam boiler or approved equivalent on new 4" high concrete pad in location of demolished coal boiler #2. Install a new packaged deaerator with two (2) pumps included on new 4" high concrete pad. New boiler shall have low NOx burner (30 PPM using natural gas; 90 PPM using #2 oil), O_2 trim and high turndown (10:1 with natural gas; 8:1 with #2 oil). New boiler to have Fireye NXF 4000 combustion controls, consistent with Kewanee controls.
2. Extend 6" steam piping from each boiler to a new steam main at the ceiling. Include a 6" 300 lb. stop/check valve on the outlet flange of each boiler.
3. Provide 6" steam piping and 2-1/2" condensate piping from the Plant to the Building 5 Pump Room.
4. Extend 4" steam piping from the main at the ceiling to the top of the deaerator. Include a pressure regulating valve, 4" isolation valves, and a 2" globe type by-pass valve.
5. Provide 2-1/2" condensate return piping from the existing condensate tank in the Plant to the deaerator. Include valving at each end.
6. Provide 1-1/4" make-up water piping from the existing water treatment assembly, located nearby, to the deaerator. Include valving.
7. Provide 2-1/2" and 2" feedwater piping (welded steel) from the pumps on the deaerator to each boiler's feedwater valve assembly. The feedwater valve assembly is shipped loose with each boiler, installed and wired by the contractor.
8. Extend new 2-1/2" welded steel natural gas piping (Sch 40) from the 6" gas main to the Central Plant installed under ECM 3.1, to each boiler. Include manual gas valve on branch at main, manual gas valve, gas meter, and pressure regulator at each boiler. Vent pressure regulator at boilers to the outdoors.
9. Extend copper fuel oil supply and return piping overhead from the existing oil pump assembly to each boiler. Include manual ball valves.
10. Install a 24" double wall stainless steel flue up through the roof for each boiler, minimum 7' above roof. Include flue supports, roof penetration, 24" square roof curb, patching of Hypalon membrane roof, flashing, and flue termination for each boiler stack. Combustion air will be drawn from the space.
11. Extend steam relief valve piping from boiler relief valves and deaerator relief valves to the outdoors, minimum 7' above roof. It may be possible to tie into existing relief piping already exiting the building, provided it will meet code requirements.
12. Provide 480 volt 3-phase power from existing motor control centers "MCC-1", "MCC-2", and 120-volt control power to each steam boiler and to the deaerator. Provide two new 3P.30A circuit breakers within "MCC-2" for the steam boilers, and one 3P.30A circuit breaker within "MCC-1" for the deaerator. Route new feeders overhead to each boiler and deaerator. Provide 3#10 AWG & 1#10 Grd ¾" RGS conduit for the boilers and deaerator and 2#12& 1#12 grd., ¾" RGS conduit for control. Provide power and control disconnect switches. If spare circuit breaker space is not available for control circuits, utilize breakers which served the coal and emission systems.

13. Provide enable/disable controls for each steam boiler and for the deaerator along with a new pressure sensor on the steam main for boiler control. Also provide a BACnet IP connection from each boiler controller to Tridium.
14. Test and commission the steam equipment systems and controls. Provide Owner training following commissioning.

As an option, Houtzdale can choose to install a second new boiler instead of re-using the Kewanee Boiler (described as ECM 3.2a). While the Kewanee has been inspected and found sound, a new boiler may be desired. There is a price increase for this option since it involves the demolition of the Kewanee boiler and the purchase and installation of a new boiler. This new boiler will be the same model as the base described above.

Savings for this scope is somewhat small and for purposes of accounting, no savings are ascribed to this ECM. The process of creating steam has not changed between the existing operation and the proposed. While some components have changed, the relative efficiency is minimal.

Operation and Maintenance Impact

Since the O&M impact for converting fuels is described in ECM 3.1, there is no major impact with this measure.

Training

After installation, the system will be commissioned, with Houtzdale personnel if desired. Following start up, factory representative and TEN will conduct training for the maintenance personnel. Considering the existing knowledge base of the operating engineers, the training will be focused on differences with the new equipment.

Measurement and Verification

While there is no specific savings assigned to this measure, it's overall impact will be included in the Option C protocol for measurement and verification. See the Measurement and Verification section of this IGA for specific information.

Exclusions

The following general relevant exclusions apply except where explicitly included in the scope of work above:

1. Premium time labor is excluded.
2. Delays due to others are excluded.

ECM 3.3 – Hot Water Plant Upgrades

Creating hot water directly, without the need of steam is a more efficient process. Consolidation of pumping and conversion to variable flow will additionally create a more efficient operation.

Existing Conditions

To produce space heating HW and domestic HW, high pressure steam is converted to 180°F to 190°F hot water via three heat exchangers, located in the Central Plant. The existing water to water domestic heat exchangers require a minimum of 180°F HW to produce the required amount of domestic hot water.

Hot water is pumped throughout the various buildings on campus via an underground HW piping distribution system. This is accomplished using primary, secondary and tertiary pumps. The primary pumps are constant speed and the secondary and tertiary pumps are controlled by variable frequency drives.

The primary and secondary pumps are in the central plant, while the tertiary pumps are in the pump house of Building 5.

The following table summarizes the existing HW distribution pumps:

Heating System Pumps

Description	Size (HP)	Serves
Feedwater	25	Boilers
Feedwater	25	Boilers
Feedwater	10	Boilers
Primary HW Pump	7.5	HW Distribution Heat Exchanger
Primary HW Pump	7.5	HW Distribution Heat Exchanger
Primary HW Pump	7.5	HW Distribution Heat Exchanger
Secondary HW Pump	7.5	HW Distribution Plant to Admin and Building H
Secondary HW Pump	7.5	HW Distribution Plant to Admin and Building H
Secondary HW Pump	150	HW Distribution Plant to Building 5
Secondary HW Pump	150	HW Distribution Plant to Building 5
Tertiary HW Pump	125	HW Distribution - Building 5 to Remainder of Buildings
Tertiary HW Pump	125	HW Distribution - Building 5 to Remainder of Buildings

The Houtzdale facility's DEP Air Quality Permit only allows for the use of coal for 90 days each year. Due to this restriction, as well as limited turndown using coal, winter heating load requirements, and annual emissions limitations, the B & W boilers typically fire using coal during the colder weather from late December to late March. The Kewanee and Cleaver-Brooks boilers operate year-round, operating as supplemental boilers during the winter months and operating the remaining nine (9) months as the main source for steam production.

Each of the coal fired boilers has a 20 HP forced draft (FD) fan and a 60 HP induced draft (ID) fan. Significant amounts of energy are used to pulverize coal, operate the emissions, and ash collection systems required to operate the coal boilers. Micronizer mills, which pulverize the coal, need to be rebuilt at least every 2 years (essentially 1 per year). Additionally, the emissions systems require regular monitoring and maintenance.

Proposed Solution

TEN proposes to install two new 350 HP 3-pass hot water boilers, convert the existing 800 HP Cleaver Brooks fire-tube boiler (Boiler #4) from steam to hot water. The change to two smaller hot water boilers was made to match the lowest expected heating loads of the facility during the summer with the turndown of the boilers in order to minimize boiler cycling.

The heating hot water distribution loop will utilize a new variable primary pumping system.

New HW Boiler Installation Scope

1. Provide and install two (2) new 350 BHP 3-pass, wet back, scotch marine design Superior "Super Seminole" HW fire tube boilers or equal where existing B&W coal-fired boiler #1 was located. The new boilers shall have low NOx burners (30 PPM using natural gas; 90 PPM using #2 oil), O_2 trim and high turndown (10:1 with natural gas; 8:1 with #2 oil). New boilers to have Fireye NXF 4000 combustion controls, consistent with steam system controls. One controller shall act as master controller to all hot water boilers.
2. Install 12" Hot Water Supply and 12" Hot Water Return piping from the new 10" and 3" exterior piping connections installed under ECM 4, across the boiler room to the new Hot Water boilers (prep for extension to existing Cleaver Brooks boiler for after conversion to Hot Water). Provide Schedule 40 welded steel pipe and fittings. Connect to the new boilers with flanged 8" butterfly valves.
3. Pipe the hot water supply line through a 12" tangential air separator and three (3) new end suction, 700 GPM, 60 HP hot water pumps with valves and trim (one pump is a spare). These pumps will also be utilized with the two (2) new HW boilers and the existing Cleaver Brooks boiler after conversion from steam to HW. Install the new pumps on new concrete pads located at the back end of B&W coal boiler #2, once the boiler has been removed (under this ECM). Refer to detail 1 on drawing M-601 for valve trim and end suction pump installation. Install the three (3) pumps on one new concrete pad.

4. Extend the make-up water system which serves the existing HW system and pump skid to the suction side of the new air separator. Provide a new pressure regulating valve with by-pass, pressure gauge and pressure relief valve. Provide a new 1000-gallon HW expansion tank to serve the new hot water piping system.
5. Extend new 6" welded steel natural gas piping (Sch 40) from the location where the gas main enters the Boiler Room under ECM 3.1 to each boiler. Include manual gas valve on branch at main, manual gas valve, gas meter, and pressure regulator at each boiler. Vent pressure regulator at boiler to the outdoors.
15. Install a 24" double wall stainless steel flue up through the roof for each boiler, minimum 7' above roof. Include flue supports, roof penetration, 24" square roof curb, patching of Hypalon membrane roof, flashing, and flue termination for each boiler stack. Combustion air will be drawn from the space.
6. Provide variable frequency drives, with integral disconnects, for each of the three (3) 60 HP, 480-volt hot water pumps. Provide power from existing motor control center "MCC-1" located near the hot water pumps. Provide three 3P.100A circuit breakers within existing motor control center "MCC-1" to serve the hot water pumps. Feeders shall be routed overhead to the VFD and to each pump. Provide 3#1 AWG & 1#8 Grd in 1-1/4" RGS conduit. Provide a flexible conduit connection at each pump motor.
7. Provide 10 gallon shot feeder and 1" piping and valve trim across the pump header. Mount the shot feeder on the new pump pad. Fill and vent the piping system. Restore closed loop chemical treatment to proper levels. Provide an adequate quantity of chemical to treat both the new hot water piping and the outdoor overhead hot water piping.
8. Provide controls for each pump from the Niagara Tridium system. Provide start/stop, differential pressure, current status, and speed control (4 points) for each new pump. Connect the VFDs to Tridium via BACnet. Control two (2) of the new 700 GPM Pumps to operate when the existing 800 HP Cleaver Brooks boiler fires. Control pump speed from new differential pressure sensors located in Buildings 2 and 6.
9. Once the new steam and HW boilers are operational:
   a. Demolish and remove the three (3) existing steam to HW heat exchangers. Remove existing piping back to points indicated on drawing MD-101.
   b. Disconnect and remove the existing deaerator assembly including feedwater pumps and controls. Remove the concrete pad serving the deaerator.
   c. Disconnect and remove existing HW pumps and pump skid. Remove existing piping back to points indicated on drawing MD-101.

Convert the Cleaver Brooks boiler after installing the new steam and hot water boilers.

Existing Cleaver Brooks Boiler – Steam to HW Conversion Scope

1. Remove the Cleaver Brooks boiler from service, retain for conversion to HW operation. Valve-off steam and feedwater piping and remove those lines back to active mains.
2. Temporarily disconnect power from the boiler.
3. Remove steam boiler trim. Plug the water level, chem feed, and front and rear blowdown connections.
4. Remove steam outlet nozzle and feed water inlet piping connections.
5. Provide new 12" flanged water inlet and outlet connections. Weld new connections to the boiler and certify welds.
6. Modify the pressure relief valves.
7. Install drain valve on the bottom blowdown and air vent on the top blowdown connections.
8. Provide new level safety controls. Install manual and automatic low water cut-offs.
9. Upgrade boiler controls to Fireye NXF 4000 components consistent with other boilers.
10. Install a 12" open/close control valve on the inlet piping of the existing Cleaver Brooks boiler.

11. Install BTUH metering across the HW supply and HW return. Run controls back to Niagara Tridium utilizing BACNet IP protocols.
12. After the exterior overhead hot water piping is complete, energize the Cleaver Brooks Boiler and new HW pumps to start-up and test the new system. Provide start-up test reports.
13. Balance each pump.
14. Test and commission the hot water equipment systems and controls. Provide Owner training following commissioning.

Savings are derived from both a more efficient process to create hot water (when compared to steam) as well as the delivery system to the end devices. Whenever a process utilizes the temperatures and pressures that are like that of the production source, the highest efficiency can be achieved. In contrast, if the production source is at a much higher temperature and pressure, then the energy used to create that condition is wasted when converted down to a lower energy state.

Pumping system design has changed significantly over the last 20-30 years. The use of variable flow, not only at the end devices, but at the main equipment has been slowly adopted and now makes up most standard designs. Houtzdale hot water pumping was designed with three stages of pumping. The proposed design has only one stage and is sized to operate efficiently at all conditions. Safeguards are designed into the system to prevent unsafe low flows through the boilers.

Operations and Maintenance Impact

As with the steam boilers, the elimination of coal fired boilers and use of dedicated hot water boilers fired with natural gas will reduce O&M needs. While the combined plants will have five boilers instead of four, their operation is relatively simple compared to the B&W boilers. Hot water boiler are inherently simpler machines. O&M savings concerning the boiler plant have been compiled in ECM 3.1.

Training

Training will focus on hot water boiler operation and maintenance as compared to steam boilers. Factory representative along with TEN will conduct training to familiarize Houtzdale maintenance staff with hot water generation and any new devices or processes that come with the new HW boilers.

Measurement and Verification

See Measurement and Verification section in this IGA for detailed information on the protocols to be used for this ECM.

Exclusions

The following general relevant exclusions apply except where explicitly included in the scope of work above:

1. Premium time labor is excluded.
2. Delays due to others are excluded.

ECM 4.1 – New HW Distribution

Leaks in the hot water distribution system have plagued the Houtzdale facility for several years. It is desired to replace this system so the leaks can mostly be eliminated; when they do appear, they can be easily detected and repaired. A new hot water distribution is the recommended approach.

Existing Conditions

Hot water for use in the facilitates at SCI Houtzdale is currently distributed to building via underground piping systems. The hot water distribution system begins at the Central Plant and proceeds underground to serve most of the buildings on campus. The hot water distribution system serves sixteen buildings or groups of attached buildings.

The hot water distribution system was originally designed as part of the overall facility design in 1993. The hot water distribution loop was expanded in 1998 to include Housing Units I and J. Hot water pumps were increased in horsepower over those originally designed, possibly to account for the additional loads. The main piping branches include 8” pipes and smaller branches to serve the Administration Building and Housing Unit H.

The underground piping distribution systems are approaching 25 years of age and have developed leaks that require constant repairs. Based on make-up water meter readings, the hot water system continuously leaks approximately three to five gallons per minute (gpm) of heated hot water used for heating buildings and Domestic Hot Water generation. The facilities department has been unable to locate and repair all the underground leaks. Extensive repairs and costs associated with these piping systems will continue. Over time these leaks will continue to occur losing greater amounts of energy and water as the piping further degrades.

Proposed Solution

TEN proposes to replace the hot water underground piping distribution system with a new above-ground hot water piping distribution system. The new piping system will serve all the same buildings the existing piping system serve, but via an above ground distribution system. The new aboveground piping will be mounted at approximately 5’-14’ above grade on stanchions depending on location, which will allow for easier installation during construction and maintenance by SCI Houtzdale. The stanchions will be designed with the capacity to allow for the addition of chilled water distribution piping.

Sections of the piping systems will continue to be routed underground under the perimeter and interior fencing. Additionally, sections will be bridged higher over roadways and access pathways designated by SCI Houtzdale. Where necessary sections of piping will be routed over existing building roofs at locations where piping routed around the buildings was not desired by SCI Houtzdale. Pitch pockets will be installed in the roofing to accommodate the structural steel required to route the piping over the roofs.

The hot water piping mains which leave the Central Plant will be increased in size from 8” to 10” to account for the additional loads of Housing Units H, I and J, which the current 8” mains were not sized for the inclusion of these buildings. This larger sizing will also reduce total pressure drop allowing the hot water piping system to pump using primary variable speed pumps in lieu of the primary, secondary, tertiary pumping system which currently exists. The new piping system will save on pumping costs and eliminate the underground piping leaks.

Piping and fittings will be insulated with mineral wool insulation and provided with aluminum jacketing.

Hot Water Distribution Scope

1. Call PA One-Call and locate all buried utilities including hot water, chilled water and steam piping systems. Hire a private utility locating company to locate prison owned utilities.
2. Provide new trenches from the location where the new piping leaves the plant approximately 180 feet to a location inside the fence. (the trenches will include new CHW, and new HW piping)
3. Excavate for the 150-foot-long trench. Retain topsoil, remove and haul spoils. Backfill around the trench and between the fences with gravel. Include detectable warning tape. Restore bituminous paving across one access road. Furnish seed, fertilizer and straw mulch. Labor for restoration of lawn areas and watering of grass will be by SCI Houtzdale. The work shall utilize pre-engineered, pre-insulated steam, condensate, hot and chilled water piping under the perimeter road and fence. Such piping shall be steel carrier pipes, with an HDPE outer jacket appropriate for such use.
4. Provide an insulated conduit system for a 150-foot length of piping (10" carrier pipe) from the point where it extends above the floor of the Central Plant to a location inside the fence. Conduit system should have 3" thick polyurethane foam insulation with HDPE jacket and end caps at both ends. Include an expansion loop in the underground piping. Cut and patch the concrete floor of the Central Plant.
5. Provide a welded steel HW piping distribution system in accordance with the design drawings. Pipe shall be Schedule 40 carbon steel, with 3" thick mineral wool insulation, and aluminum jacketing on pipe and fittings.
6. Provide 5' and 15' high galvanized steel pipe support posts (shared with the CHW piping system). Pipe supports shall be in accordance with the details on drawing C-501 located in Appendix. Pipe supports shall include excavation, concrete base extending approximately 12" above grade, pipe protection saddles, U bolts, and insulation protection shields. Space the supports according to the following:
   a. 8" piping on 24' centers.
   b. 6" piping on 20' centers
   c. 4" piping on 16' centers
   d. 3" piping on 14' centers.
7. Excavate for the posts of the pipe supports. Retain topsoil, remove spoils. Do not cut the active HW piping system. Backfill around the concrete piers with gravel. Furnish seed, fertilizer and straw mulch. Labor for restoration of lawn areas and watering of grass will be by SCI-Houtzdale.
8. Provide flanged butterfly valves at outdoor locations indicated on the plans.
9. Provide buried insulated PEX piping, where shown on the drawings, to serve smaller building loads. Backfill around the trench with gravel. Include detectable warning tape. Restore bituminous paving across roadways. Furnish seed, fertilizer and straw mulch. Labor for restoration of lawn areas and watering of grass will be by SCI Houtzdale.
10. Provide new cored building penetrations on exterior walls (generally decorative concrete block exterior walls) with sleeves sized for the outside diameter of the pipe insulation. Seal building penetrations weather tight. Install new butterfly isolation valves with flanges inside each building.
11. Provide piping connections with butterfly isolation valves within the Central Plant, to simultaneously energize both the existing and new HW distribution systems.
12. Flip over each building to the new HW system. Make connections between the existing HW piping risers and the new HW system at approximately 15' above grade. Schedule this work to minimize down times. Insulate new interior piping, with fiberglass insulation and PVC fitting covers, to match the adjacent existing pipe insulation.
13. Abandon the entire underground piping system. Isolate and disconnect the existing underground HW piping at each location it enters or leaves a building.
14. Cut existing piping short at floors and provide welded caps on piping stubs sticking up through the floor. (2 caps 19 locations). Remove the existing piping risers between the connections to the new system and the caps at the floor.

Savings are derived from the elimination of leaks which cause undue usage of water. While savings from ECM 5 exceed the maximum allowable amounts from Houtzdale Management Authority contract terms, reduction in leaks will help ensure savings are met. Additionally, this lost water had to be heated, so the thermal energy associated with warming the water will be saved.

Operations and Maintenance Impact

The elimination of the existing underground distribution system will reduce the many costly repairs that crop up during the year. Many times, these come under emergency conditions which exacerbates the costs associated with the repairs. Central Plant make up water records show that leaks continue and in fact are increasing, thus more repairs are forecasted if the system is not replaced. O&M savings have been credited in this project using cost data from Houtzdale facilities records for materials and overtime charges.

Training

Training of the new distribution system is relatively minor as there are virtually no moving parts. But identification of issues will be part of the training.

Measurement and Verification

See Measurement and Verification section located in this IGA for specific protocols for identifying savings.

Exclusions

The following general relevant exclusions apply except where explicitly included in the scope of work above:

1. Premium time labor is excluded.
2. Delays due to others are excluded.

ECM 4.2 – Chilled Water (CHW) Distribution Replacement

The chilled water is distributed throughout the facility using underground, buried piping. While the leaks described in the chilled water system are not as prevalent, the life of the piping system is suspect. Identifying leaks can be difficult. The support system described in ECM 4.1 is designed to handle chilled water piping as well.

Existing Conditions

Chilled water for use in the facilitates at SCI Houtzdale is currently distributed to building via underground piping systems. The chilled water distribution system begins at the Central Plant and proceeds underground to serve most of the buildings on campus. The chilled water distribution system serves thirteen buildings or groups of attached buildings.

The chilled water distribution system was originally designed as part of the overall facility design in 1993. The underground piping distribution systems are approaching 25 years of age and have developed leaks that require constant repairs. Most of the leaks in the chilled water distribution system have been caused by leaks in the underground hot water distribution piping.

The chilled water system leaks approximately 1 to 2 gpm of chilled water while operating. The facilities department has been unable to locate and repair all the underground leaks. Extensive repairs and costs associated with these piping systems continue. Over time these leaks will continue to occur losing greater amounts of energy and treated water as the piping degrades.

Proposed Solution

TEN proposes to replace the chilled water underground piping distribution system with a new aboveground chilled water piping distribution system. The new piping system will serve all the same buildings the existing piping system serve, but via an above ground distribution system. The new aboveground piping will be mounted on stanchions which were installed in ECM 4.1.

The chilled water piping mains which leave the Central Plant will be increased in size from 8” to 10” to account for the additional loads of Block H, which the current 8” mains were not sized for. This larger sizing will also reduce total pressure drop allowing the chilled water piping system to pump using primary variable speed pumps in lieu of the primary, secondary, tertiary pumping system which currently exists. The new piping system will save on pumping costs and virtually eliminate any opportunity for underground piping leaks.

Chilled Water Distribution Scope

If the new chilled water piping system is constructed over the winter months, some chilled water piping may need to be removed where post holes are dug and at the trench where existing 8” underground piping exits the Central Plant. It is TEN’s intent however to maintain underground distribution to allow individual transition from old to new at each individual building.

1. Isolate and disconnect underground chilled water piping at each location it enters and leaves a building.

2. Abandon the entire underground piping system.

3. Cut existing piping short at floors and provide welded caps on piping stubs sticking up through the floor. (2 caps 16 locations)

4. Provide an insulated conduit system for a 150-foot length of piping (10” carrier pipe) from the point where it extends above the floor of the Central Plant to a location inside the fence. Conduit system should have 1” thick polyurethane foam insulation with HDPE jacket and end caps at both ends.

5. Excavate for the 150-foot-long trench. Retain topsoil, remove and haul spoils. Cut and remove the abandoned underground piping system where needed to accommodate the new piping. Backfill around the trench and between the fences with gravel. Include detectable warning tape. Restore bituminous paving across one access road. Furnish seed, fertilizer and straw mulch. Labor for restoration of lawn areas and watering will be by SCI Houtzdale.

6. Provide a welded steel chilled water piping distribution system in accordance with the attached sketch. Pipe shall be Schedule 40 carbon steel, 3" thick mineral wool insulation, and aluminum jacketing on pipe and fittings.

7. Provide flanged butterfly valves at outdoor locations indicated on the plans. Double pipe supports are not needed at valves.

8. Provide new cored building penetrations on exterior walls (generally decorative concrete block exterior walls) with sleeves sized for the outside diameter of the pipe insulation. Seal building penetrations weather tight.

9. Install new butterfly isolation valves with flanges inside each building and make connections to the existing piping. Remove the piping risers between the connections to existing and the new caps at the floor. Insulate new interior piping, with fiberglass insulation and PVC fitting covers, to match the adjacent existing pipe insulation.
10. Transition over each building to the new CHW system. Make connections between the existing CHW piping risers and the new CHW system at approximately 15' above grade. Schedule this work to minimize down times. Insulate new interior piping, with fiberglass insulation and PVC fitting covers, to match the adjacent existing pipe insulation.
11. Abandon the entire underground piping system. Isolate and disconnect the existing underground CHW piping at each building.

Savings are similar to the hot water distribution ECM 4.1. However, TEN has not claimed any savings because the leaks are not as severe as the hot water system. Savings could be derived from the elimination of leaks which cause undue usage of water. While savings from ECM 5 exceed the maximum allowable amounts from Houtzdale Management Authority contract terms, reduction in leaks will help ensure savings are met. Additionally, this lost water had to be cooled, so the thermal energy associated with cooling the water will be saved. Again, no accounting of savings has been prescribed, although savings may contribute to the overall performance of the project through the measurement and verification protocols.

Operations and Maintenance Impact

The elimination of the existing underground distribution system will reduce the many costly repairs that crop up during the year. Many times, these come under emergency conditions which exacerbate the costs associated with the repairs. Central Plant make up water records show that leaks continue and in fact are increasing, thus more repairs are forecasted if the system is not replaced.

Training

Training of the new distribution system is relatively minor as there are virtually no moving parts. But identification of issues will be part of the training.

Measurement and Verification

See Measurement and Verification section located in this IGA for specific protocols for identifying savings.

Exclusions

The following general relevant exclusions apply except where explicitly included in the scope of work above:

1. Premium time labor is excluded.
2. Delays due to others are excluded.

ECM 5 – Water Conservation

Prison and jail facilities around the country have a common unaddressed security, expense and maintenance issue – their plumbing fixtures. The toilets, lavatories, and showers in correctional institutions are an aspect of inmate activities that are "uncontrolled," and the result is high use and abuse of the fixtures, leading to increased costs and reduced security. This constant use and abuse of plumbing fixtures leads to following most common issues for correctional plumbing fixtures:

An electronic plumbing control system puts the control of the plumbing fixtures in the hands of those operating the facility, and out of the hands of the inmates. Basically, the system replaces existing plumbing components with "controllable" components. By activating toilets, lavatories, and showers with electronic devices, rather than "standard" ones, the plumbing fixtures can be controlled by the facility. TEN recommends the installation of I-CON components for this project; I-CON components can be used to retrofit to all types of existing plumbing fixtures. These control products provide significant utility and energy conservation savings, as well as, security and maintenance benefits by reducing water and sewer expense by as much as 75% on retrofitted fixtures. Due to the elimination of metering diaphragms in toilet, lavatory and shower valves; both flush and lavatory valves, the cost of diaphragms, replacement parts and associated labor, are reduced as much as 90%. Additionally, flooding of cells or clogging of plumbing systems becomes much more difficult when the inmates cannot rapidly flush fixtures, reducing expensive maintenance. Security and safety of the facility is greatly enhanced.

Existing Conditions

SCI Houtzdale receives its domestic water supply from the Houtzdale Municipal Authority. The water is supplied by one water meter located in the meter pit at the front of the institution. The meter is an 8" Sensus Water Meter, Model OMNI T2. On October 10th, 2019 the meter read 230,372,980 gallons and had a flow rate of 196 gallons per minute. No Authority supply water pressure or quality issues were observed or mentioned. Once the water passes through the meter and back flow preventer, it flows through a fill valve into the 1,000,000-gallon ground level holding tank. The water tank supplies minimal pressure into a SyncroFlo package booster pump. The outgoing pressure reading was 96 psi on October 10th, 2019.

The water is billed based on the master agreement between the Institution and the Authority. Based on 2016-2018 usage, the Institution pays an average of $1.46 million annually for water. Because the Institution is approximately 50% of the Authority's water demand, the Institution does not pay a fixed rate, but alternatively has generously agreed to pay for the prorated portion of the Authority's O&M costs, which is recalculated every six months. The Authority has a minimum volume charge of 225,000 gallons per day (GPD) which is billed to the institution regardless of consumption. The Institution only has a financial incentive to reduce its current volume average of 323,000 GPD down to the 225,000 GPD minimum, approximately 30%.

The housing unit cells' plumbing and electrical utilities are mostly served with a V chase style with at least one electrical outlet. The chases are in fair condition for their age and use. Many chases had either standing water or excess moisture due to leaks, which is causing premature corrosion of the plumbing and electrical components.

The majority of the plumbing fixtures are located in the L-3 Units. These are high consumption porcelain fixtures. Many existing lavatories were observed to be leaking during the audit, mostly due to stuck actuators or worn valving. As shown in the sample installation photos, each small existing leak caused by the aging lavatory valves can consume tens of thousands of gallons and create unhealthy conditions that encourage mold and bacterial growth. The current valves have no strainers to prevent malfunctions due to debris in the water such as corroding pipe material, sand, rocks, and line break debris. There are currently at least five models of lavatory valves that must be stocked and maintained. Some parts are no longer available and the cost to repair the existing valves will continue to increase as they wear out and manufacturers discontinue the models.

Currently, the inmates must continuously depress their lavatory button with one hand, to operate the valve. Inmates cannot simultaneously scrub both hands together, while the faucet is flowing, as recommended by most health organizations, including the Centers for Disease Control. The facility's existing lavatory valves also do not meet most ADA requirements, such as maximum allowed activation force.

The H, I, and J housing units have stainless steel combination fixtures. The stainless steel is very durable. The existing toilet valve uses an orifice to hydraulically open and close the valve, which is highly affected by pressure, age, water quality, and debris. Some of the toilet valves in H and A units were converted to Sloan electronic actuators, but these are poorly designed and are highly susceptible to water intrusion. The facility has been removing these Sloan units as they fail. H housing unit is reported to have some cross flush issues because the original contractor did not install a baffled or long sweep wye for the sanitary waste. The lavatory valve cartridges appear to be wearing out, and many leaks were observed.

Fisher valves were installed by the facility staff and have reduced maintenance calls in comparison to the previous pneumatic valves. The Fisher valves are not self-closing and were seen running in a few housing units with no occupants in the shower. The existing shower nozzles varied in consumption and spray pattern, but almost all were high flow.

Most of the faucet hand wash aerators are high flow and some have their internal plates removed which allow for volumes over 4.5 GPM. Most of the temperatures of the showers were between 100-110°F. The mixing valves appear to be operational. During the pressure testing, wide swings were observed on both the domestic cold (DCW) and domestic hot water (DHW) lines, but the DHW had significantly more water hammer. This problem may be caused by issues such as lack of annual cleaning/adjustment of the mixing valves, PRVs, check stops, or DHW circulation loop. Pressures observed during the audit are shown below:

Unit	Cold Building Pressure (PSI)	Hot Building Pressure (PSI)
4 Culinary	60-70	60-70
8 Education	95-105	N/A
A L-3 Housing Unit A	50-60	50-60
B L-3 Housing Unit B	50-60	50-60
C L-3 Housing Unit C	100-110	80-110
D L-3 Housing Unit D	95-105	100-110
E L-3 Housing Unit E	55-60	55-60
F L-3 Housing Unit F	90-100	80-100
G L-2 Housing Unit G	65-75	65-75
H L-5 Housing Unit H	50-60	50-60
I L-4 Housing Unit I	60-65	60-65
J L-4 Housing Unit J	70-80	70-80
K L-2 Housing Unit K	85-90	75-80

Note that many of the pressures are exceeding recommended levels. Water pressure in the buildings is limited to 80 psi per IPC 604.8. Most equipment manufactures will not warrant plumbing equipment above 80 psi, and these higher pressures will prematurely wear out, even quality products. We generally see 55-60 psi as an acceptable pressure for most equipment, and some of the buildings are operating in this range.

Overall, the plumbing system is operational, but the increased repair expenses have begun to limit which items receive attention or repairs. The two facility plumbers are very knowledgeable, and their inmate crews seem very committed on maintaining the plumbing equipment. These resources may be overwhelmed at times, because of the thousands of fixtures, miles of piping, and hundreds of thousands of joints. A complete listing of fixtures in contained in the Appendix with the savings calculations.

Proposed Improvements

The objective of the water fixture retrofit at SCI Houtzdale is to significantly reduce the water consumption and maintenance needs for the facility personnel, while increasing the security and control for the institution's officers. The water fixture retrofit will also substantially reduce the demand on the domestic hot water system. There are two aspects of the proposed plumbing retrofit. First, the inmate cell areas will be retrofitted with I-CON electronic plumbing controls. Second, the commercial fixtures and valves will be upgraded to more efficient systems in areas throughout the facility serving both inmates and staff.

The I-CON system retrofit of the inmate housing fixtures is recommended because it greatly reduces the water and fuel consumption of the facility while addressing the issues previously listed for the existing plumbing equipment. I-CON's product is made exclusively for the correctional market using proven technology based on the evolving needs of correctional facilities. The fixture table below indicates the area, quantity, and type of work to be conducted. Below is a general summary.

Area	I-CON Flush Valve	I-CON Lavatory Valve	I-CON Shower Valve and Nozzle	I-CON Shower Valve and Wand
A L-3 Housing Unit A	128		29	1
B L-3 Housing Unit B	128		29	1
C L-3 Housing Unit C	128		29	1
D L-3 Housing Unit D	128		29	1
E L-3 Housing Unit E	128		29	1
F L-3 Housing Unit F	128		29	1
G L-2 Housing Unit G			19	1
H L-5 Housing Unit H	96	96	16	2
I L-4 Housing Unit I	128	128	16	1
J L-4 Housing Unit J	128	128	16	1
K L-2 Housing Unit K			12	2
Totals	**1,120**	**352**	**253**	**13**

Flush Valves

The inmate cell toilets will receive an I-CON electronic flush valve and activation button. The primary savings associated with the flush valve is produced by increasing the volumetric rate of the bowl's flush to more effectively clear the bowl in a shorter duration of time than a standard diaphragm flush valve. The existing valve uses an orifice to hydraulically open and close the valve, which is highly affected by pressure, age, water quality, and debris. The I-CON flush valve is activated electronically and resists the effects of the facility's water problems. The new flush valve requires a very low pressure to seal and helps reduce free flowing valves caused by water shutdowns or inmates simultaneously flushing.

The second source of water reduction by the I-CON flush valve comes from the controller's lockout time settings. This lockout has been developed specifically to modify inmate behavior by deterring abuse of the toilet fixture and plumbing system. In a wet cell environment, the toilet is used for many more purposes than typical toilets. Inmates use the toilets as trash cans, drink coolers, cooking tables, smoking ventilation, communications, clothes wash basins, flooding devices, and other purposes. The toilet flush lockout will help reduce the abuse of the toilet. The lockout generally yields a 35-50% reduction in flush count. Lockout generally applies to toilets in cells, and an LED activation button will be installed to display red, which will indicate that the toilet is in lockout. The button also displays other patterns and colors; such as green to show the user that the valve has been signaled to flush. The LED button also helps reduce maintenance calls by visibly showing the inmate the fixture is in lockout, and a repair by the facility staff is not needed.

Lavatory Valves

The inmate cell lavatories will receive an I-CON electronic lavatory valve and activation buttons. The I-CON lavatory valve is recommended because of the universal parts design and minimal wear components. Inmates also prefer the I-CON valve because they can activate the valve with a single touch. Lavatory valves generally do not receive lockout and operate for the same consistent duration on each cycle. After touching the activation button, the proposed I-CON lavatory valve will allow handsfree lavatory operation for scrubbing.

Many existing lavatories were observed to be leaking during the audit, mostly due to stuck actuators or worn valving. Each small existing leak caused by the ageing lavatory valves can consume tens of thousands of gallons and create unhealthy conditions that encourage mold and bacterial growth. Utility savings from the lavatories is created by replacing the existing valving with an I-CON lavatory manifold that positively seals when not in use, and when activated, flows through a replaceable flow restrictor. The lavatories are then resistant to clogging because they have a stainless-steel mesh filter, which reduces maintenance by the facility staff due to debris in the water such as corroding pipe material, sand, rocks, and line break debris.

There are currently at least 5 models of valves that must be stocked and maintained. Some parts are no longer available and the cost to repair the existing valves will continue to increase as they wear out and manufacturers discontinue the models. The I-CON electronic plumbing control system is being proposed in the facility because these products offer retrofit systems adapting to all existing plumbing fixtures at the site. The same I-CON lavatory valve and button design will be used throughout the institution, which will greatly reduce the amount of maintenance stock and expediate repairs thru consistency of materials.

Shower Valves

The inmate showers will receive an I-CON electronic shower valve and activation button. The existing nozzle will be replaced with a vandal resistant, low consumption nozzle. Currently, the existing rotary showers can be left running to keep the shower area steamed and many nozzles are vandalized or provide inconsistent flows. The I-CON electronic shower valve will positively time out and shutoff if left unattended. The new shower nozzle will provide a low consumption shower through a fixed spray pattern that efficiently atomizes the water.

I-CON Controller

At the core of the I-CON system is the electronic controller which may control one specific or multiple types of electronic I-CON flush, lavatory, shower, and other valves. The controller board is housed within a water-resistant housing and is conformal coated to provide additional durability. The controller regulates properties such as valve duration, cycles to lockout, lockout duration, and many other features. The controller also has an onboard memory, if proof of operation is required for legal reasons. The controller is activated by solid stainless steel, pressure sensitive button with no moving parts. The controller will generally be installed in the pipe chase, along with the valves. Because the controls and valves will be installed in the pipe chase, the maintenance personnel will not need to enter the cell to operate and troubleshoot the equipment, which will expedite repairs while keeping the inmate in their cell. The controller will be installed for efficient use for the number of available ports. The electrical service for the I-CON controllers requires a minimum of 24VAC to operate and this power will usually be supplied by a low voltage plugin transformer.

Commercial Style Fixtures and Valves

Commercial style fixtures (Qty – 277) have been removed from the project scope due to their lower savings potential.

Additional Recommendations

During the audit, water hammer and high pressures were observed. Upon inspection, the existing pressure reducing valves are likely in need of cleaning and repairs. These cleanings and adjustments are recommended to be performed annually, per manufacturer's specifications. If upstream debris is damaging the PRVs, a building DCW strainer is recommended. The facility mixing valves and mixing stations are recommended to be cleaned and checked for operation.

Domestic plumbing systems receiving over 80 psi are susceptible to premature failure of the components due to the force exerted on its surfaces, and also by mechanical erosion weakening the parts. Water pressure in commercial buildings is limited to 80 psi per IPC 604.8. The building pressure is recommended to be set by the facility personnel between 55-60 psi at the median first floor level of the housing units. This recommendation will need further review from the facility to ensure compliance with the additional needs of the new domestic plumbing.

It is recommended that any ECM or repair of equipment affecting the water supply to the fixtures, such as meter replacement or heater replacement, PRV repair, mixing valve repair, or similar; be conducted before the installation of downstream equipment such as this water conservation ECM to prevent premature maintenance of this ECM's equipment. If fixture work is to be conducted without finishing upstream work, a filter is recommended to be installed in each housing unit if there is currently not a functioning filtration system in place.

It is also recommended the facility address the existing maintenance issues ahead of the plumbing retrofit. These issues may include cracked fixtures, missing fixtures/components, clogged jets, deteriorated seals on both upstream shutoff valves/angle stops and DWV (including spuds), broken/missing fixture bolts/rings, DHW and DCW supplies upstream of the connection point of the I-CON equipment, water temperature, water pressure, and other items which are the responsibility of the facility to maintain. This preventative maintenance and repairs will ensure an efficient installation of the new water equipment and they will be able to provide years of low maintenance.

ECM 5b – Replace Pressure Reducing Valves

(included in selected project)

Existing Conditions

The existing pressure reducing valves (PRVs) are original to the buildings. The purpose of a PRV is to reduce the incoming water line pressure into a building. Many PRVs appear to be out of adjustment, and multiple complete - failures have been observed. A PRV is supposed to receive annual inspections and maintenance, but unfortunately some of these valves have been reported to not be rebuildable which has resulted in extremely high pressures in the buildings causing premature wear on the downstream plumbing components. Pressures beyond manufacturer's recommendations can negate warranties of newly installed equipment.

Proposed Conditions

Before the other domestic plumbing work can begin, adjustment of the building water pressure must be performed. This scope proposes to replace the existing pressure reducing valves (PRVs) serving the housing units A-K, with new PRVs. We recommend complete replacement of these valves because the facility staff will receive up to date PRVs which are easily adjusted and maintained with readily available parts.

To install these PRVs, coordination between the plumbing contractor and the facility will be vital, because the individual housing unit where the work is performed that day will likely receive a domestic water shutdown for 2-6 hours. The contractor will attempt to minimize this impact by having all anticipated materials and tools ready on the day of replacement. The facility staff will provide support by exercising the pre and post PRV shutoff valves prior to the day of PRV replacement and ensure their operability. We recommend the staff identify and repair any non-operable shutoff valves weeks before construction begins, to provide them ample time to address this maintenance issue. This proactive approach will help reduce or eliminate construction delays due to faulty shutoff valves. Due to the importance of a housing unit water shutdown, the facility staff will need to be present during the PRV replacement to operate the shutoff valves and provide corporative assistance as needed to ensure minimal disruptions to the housing units.

The following table outlines the locations of work for ECM 5b, PRV Replacement. This current scope does not include shutoff valve repair. This alternate replaces the outlined PRVs in their current location and does not include upgrades like straining or remote water shutdown capability. For pricing purposes which was conducted during the Pandemic restrictions period, the PRV's have been sized based on normally anticipated flow rate ranges adjusted for a probable demand of 10% of simultaneous use. Our subcontractor, ICS, will perform a final inspection of all scope items on site during our final design phase. At that time, the actual scope and PRV specifications will be determined and submitted for approvals.

Pressure Reducing Valve Scope Identification

Unit	Audit Cold Building Pressure (PSI)	Audit Hot Building Pressure (PSI)	Size	PRV Replacement
A L-3 Housing Unit A	50-60	50-60	4"	Included
			1.25"	Included
B L-3 Housing Unit B	50-60	50-60	4"	Included
			1.25"	Included
C L-3 Housing Unit C	100-110	80-110	4"	Included
			1.25"	Included
D L-3 Housing Unit D	95-105	100-110	4"	Included
			1.25"	Included
E L-3 Housing Unit E	55-60	55-60	4"	Included
			1.25"	Included
F L-3 Housing Unit F	90-100	80-100	4"	Included
			1.25"	Included
G L-2 Housing Unit G	65-75	65-75	3"	Included

Unit	Audit Cold Building Pressure (PSI)	Audit Hot Building Pressure (PSI)	Size	PRV Replacement
			1”	Included
H L-5 Housing Unit H	50-60	50-60	4”	Included
			1.25”	Included
I L-4 Housing Unit I	60-65	60-65	Unconfirmed	Included
			Unconfirmed	Included
J L-4 Housing Unit J	70-80	70-80	Unconfirmed	Included
			Unconfirmed	Included
K L-2 Housing Unit K	85-90	75-80	Unconfirmed	Included
			Unconfirmed	Included

Savings Analysis

Savings estimates are obtained by understanding the use of water at Houtzdale. Our auditors walked the entire site to inventory all water consuming equipment. The auditors also took instantaneous measurements of major plumbing items – mostly within the housing units. This allowed to create a "water balance" estimate to break down how the different pieces of equipment consume water and become an identified amount in which the combination of all components match up closely to the actual consumption from utility meter information. This activity ensures that our estimates do not exceed those that could be reasonably be obtained with the given existing consumption.

During the audit and sample installation, we also took readings after installation. These give us an indication of the potential for savings. The sample fixtures were measured before and after the retrofit. The building's water pressure was 90-100 psi, which is higher than permitted by Pennsylvania plumbing code and voids most plumbing manufacture's warranties. The retrofit valve's volumes were recorded higher than the project's anticipated volumes because of the higher pressure.

Location	Valve Type	Pre-Retrofit Volume	Post Retrofit Volume
Cell 1	I-CON Toilet Flush Valve	5.1 GPF	2.5 GPF
Cell 1	I-CON Lavatory Valve - Cold	4.2 GPM	1.2 GPM
Cell 1	I-CON Lavatory Valve - Hot	4.3 GPM	1.2 GPM
Cell 2	I-CON Toilet Flush Valve	4.3 GPF	2.25 GPF
Cell 2	I-CON Lavatory Valve - Cold	3.8 GPM	1.3 GPM
Cell 2	I-CON Lavatory Valve - Hot	4.3 GPM	1.3 GPM

The two showers were retrofitted with I-CON electronic shower valves. An electronic controller was installed to serve both showers. The I-CON touch buttons allow easy on/off operation, while automatically shutting the valve off when not in use. The new vandal resistant shower nozzles reduced the shower volume, and multiple inmates commented they actually preferred the new "better" fixed spray pattern.

The sample fixtures were measured before and after the retrofit. The building's water pressure was 90-100 psi, which is higher than permitted by Pennsylvania plumbing code and voids most plumbing manufacture's warranties. The nozzles installed were rated at 1.5 GPM but flowed higher because of the extreme water pressure.

Location	Valve Type	Pre-Retrofit Volume	Post Retrofit Volume
Shower 1	I-CON Shower Valve	2.9 GPM	1.75 GPM
Shower 2	I-CON Shower Valve	2.3 GPM	1.75 GPM

Savings are then calculated from this information as well as flow or flush rates at normal pressures. Knowing the number of inmates, employees and visitors, and estimates of uses per day, spreadsheet calculation of existing and post-installation consumption is created. These savings are calculated to exceed the amount allowed by Houtzdale Management Agency, and the contract terms. **NOTE: water pressure below 80 psig are required to obtain the savings estimated as well as preserve the warranty on the installed equipment.**

Water Conservation ECM - Options Table				
	Qty of I-CON Electronic Retrofit	Qty of Low Flow / Fixtures	Annual Water Savings (kGal)	Annual Savings (Therms)
Base Project	1738	277	40,735	56,616

Operations and Maintenance Impact

As noted above, the use of the I-CON fixtures will reduce failures. However, we have not made an estimate or accounting of the reduction in parts or labor that would be saved. The I-CON components are designed to provide for years of use as long as the system itself is maintained properly. The useful life of water conservation equipment ranges from 10-25 years.

Attic stock will be provided to the facility at the time of substantial completion, per ICS determined quantities, unless prior coordination of material quantities have been approved. The purpose of attic stock is to provide facility personnel instant onsite material to expedite their future repairs of defective/end of life parts. This will assist to prevent a shutdown of an area due to delays caused by the procurement of replacement material. The facility is advised to replenish this stock as it is consumed.

With the installation of ECM-5b, reducing the water pressure will positively affect the maintenance and operation of all plumbing equipment, whether installed by TEN or not. Reduced pressures will relieve stress and lengthen the life of the existing and installed fixtures. After substantial completion, the O&M documentation will provide quantities with specific part numbers per the as-built I-CON system.

Training

As with any efficient system, an understanding of the operating mechanics is key to continuing the savings for years to come. Upon completion of the water fixture retrofit, the facility personnel and trustees (when applicable) will receive hands-on training of the I-CON system regarding inspection, troubleshooting, and operation. Additionally, general water conservation recommendations will be given based upon the project manager's findings at the facility during the retrofit. An O&M manual will be provided. If requested, pre and post M&V services will be conducted as required by standard confidence protocol utilizing Option A of the IPMVP. TEN will videotape the training sessions for internal use only.

Measurement and Verification

See "Measurement & Verification" section for complete description of methods to be used.

Exclusions and Assumptions

The following general relevant exclusions apply except where explicitly included in the scope of work above:

1. Premium time labor is excluded.
2. Delays due to others are excluded.
3. Items not specially identified to be retrofitted or replaced are to remain in place. This project scope includes only the number of fixtures that are detailed in this proposal.
4. Upstream and downstream infrastructure components are expected to be in functional condition prior to start of construction. These items include, but are not limited to, shutoff valves, water filtration, water treatment, pumps, heaters, pressure regulating valves, mixing valves, angle stops, piping, supports, insulation, fixture jets, drainage. Repair or replacement by TEN would be at additional cost.
5. The customer will identify isolation valves prior to construction, and valves are expected to be in working order. Defective valves are the customer's responsibility to repair or replace.
6. We exclude costs associated with concealed conditions, which are any unobvious conditions not disclosed visually during the walkthrough or in written bid documents.
7. This proposal is based on facility provided information as to suitable electrical availability, stability and emergency capacity to operate electrical equipment according to NEC.
8. This proposal is based on reasonable access to a quantity of fixtures sufficient to maintain the anticipated schedule. We estimate this as contiguous accessibility to a minimum of 24 fixtures, chases and associated plumbing per day. A minimum of two fulltime dedicated escorts with necessary keys will be required for our scope, allowing two independent crews to perform the work. No costs for escorts have been included in this proposal. This proposal is also based on secured tool and material storage inside the facility sufficient for at least one week of work.
9. Angle stop valves shall be reused. We include up to 2% replacement of defective stop valves. Replacement of additional stop valves shall be at additional cost.
10. Toilet and urinal flanges shall be reused when not previously indicated. Additional flange repair, flange replacement, or carrier repair shall be at additional cost.
12. This proposal does not include painting or tile work, and very little / none is expected. Based on experience, the facility is better suited to perform and manage this work.
13. TEN assumes ownership and responsibility for the removal and disposal of all construction related materials and removed facility equipment, other than hazardous materials such as lead or asbestos. The facility is responsible for any hazardous material abatement prior to the installation of this ECM.
14. Permit Fees are not anticipated for this project based on the "retrofit" nature of the scope and permissible in the category of maintenance, and no major modifications to infrastructure are being performed.
15. We reserve the ability to utilize all Code approved materials and methods. Should the facility have a preference or prohibition which has a significant cost affect, that premium may result in a change order if the different material is requested.
16. Fixture condition and water quality can affect performance and functionality regardless of retrofit equipment selected. TEN is not responsible for pre-existing conditions or drainage obstructions, nor prior assessment of condition or quality.
17. Significant upstream scopes of work, shutdowns and maintenance are recommended to be performed prior to the water fixture retrofit scope, so as to not affect or damage new work which may be affected by upstream contaminants. This includes any work to pressure reducing valves.

ECM 6 – Central Chilled Water Plant Upgrades

Chiller energy and efficiency performance has improved tremendously since the original chillers were installed in 1994. Additionally, water distribution designs have changed to create a more efficient and responsive system, resulting in further energy savings to the entire chilled water system.

Existing Conditions

Chiller water for comfort cooling at SCI Houtzdale is produced by three (3) 410-ton centrifugal chillers manufactured by Snyder General. This results in a total chiller plant capacity of 1,230 tons. Peak cooling load has been stated to be 780 tons per Bulletin 6 of the RFP. During the IGA TEN Evaluated the chiller plant operation. During the peak summer day, the chilled water load was satisfied by operating two chillers confirming that the peak chilled water load is less than the total capacity of two chillers.

The chillers are in the central plant and typically operate six months per year from mid-April to mid-October. The three existing chillers are older units approaching 25 years old and are becoming maintenance intensive due to their age. Additionally, turndown on these units is limited to 4:1, and at 25% load the kW/ton is over 1.0, which is not energy efficient by today's standards.

Central Cooling Chillers

Tag	Brand	Type	Capacity (tons)	Year Built
CH-1	McQuay	Centrifugal	410 ton	1994
CH-2	McQuay	Centrifugal	410 ton	1994
CH-3	McQuay	Centrifugal	410 ton	1994

The chilled water is pumped to the various buildings on campus via an underground chilled water piping network. The chilled water system uses a system of primary (chiller), secondary (from plant) and tertiary pumps (from inside fence). The existing cooling towers utilize two-speed fans and constant speed condenser water pumps. The table below summarizes the existing chilled water system pumps.

Cooling System Pumps

Description	Size (HP)	Serves
Primary CHW Pumps (3)	7.5	Chillers
Secondary CHW Pump	50	Central Plant to Building 5
Secondary CHW Pump	50	Central Plant to Building 5
Secondary CHW Pump	10	Central Plant to Admin Building & Building H
Secondary CHW Pump	10	Central Plant to Admin Building & Building H
Tertiary CHW Pump	75	CHW Distribution - Building 5 to Remainder of Buildings
Tertiary CHW Pump	75	CHW Distribution - Building 5 to Remainder of Buildings
Condenser Water Pumps	25	Cooling Tower
Condenser Water Pumps	25	Cooling Tower
Condenser Water Pumps	25	Cooling Tower

The existing design has one condenser water pump and one primary chilled water pump are piped to their individual/dedicated cooling tower or chiller. With this existing piping arrangement, if any of the four components fail (chiller, chiller pump, cooling tower or condenser water pump), the chiller and the entire set of four components associated with it becomes unavailable for use. This existing piping arrangement limits flexibility when a piece of equipment is out of service.

Additionally, the chilled water plant has no refrigerant leak, alarm, and emergency exhaust system. Upgrades to the chiller plant will require the installation of these systems.

Proposed Solution

TEN proposes to replace the three (3) 410-ton centrifugal chillers with three (3) new 395-ton electric centrifugal or screw chillers which have variable speed compressors. During operational times, one chiller will continue to serve as a spare that can be rotated out for maintenance if needed.

TEN will replace the primary, secondary and tertiary chilled water pumping system with a new system that utilizes three (3) primary variable chilled water pumps to serve the building needs. Each pump will have variable frequency drive control and one of each set of pumps will serve as a spare, if desired. The piping configurations will also be modified so that any pump can operate with any chiller or cooling tower, allowing maximum flexibility when any piece of equipment is out of service.

The variable frequency drives on every major piece of equipment will allow the Niagara Tridium controls system to operate the chilled water plant in a very energy efficient manner.

Chiller System Scope

1. Purge refrigerant from the three (3) existing chillers.
2. Disconnect piping and 4160 volts electrical to each of the three (3) existing chillers. Remove and dispose of, recycle, or sell the existing 410-ton chillers. Remove the 5 kV electrical cables from the electrical room switchgear to each chiller. Retain the existing concrete chiller pads and conduits routed within floor for reuse.
3. Disconnect and remove the three (3) existing primary chilled water pumps (655 GPM, 7-1/2 HP) and four secondary chilled water pumps (2 at 1165 GPM, 50 HP and 2 at 142 GPM, 10 HP). Remove the wiring from switchboard “CP-SWBD” in the main electrical room and the electrical starters, disconnect switches, and controls at the pump skid. The three (3) existing condenser water pumps will remain under this ECM. Retain existing conduits within floor routed from switchboard “CP-SWBD” to pump equipment for reuse.
4. Drain, remove insulation, cut, and remove all the existing chilled water piping inside the Central Plant for the piping system to be modified for variable primary campus pumping. Also remove the uninsulated condenser water drops to the chillers.
5. Provide three (3) new 300 kva transformers (Rated: 4,160V-480V,3-Phase) and three (3) new 3P.400A fused disconnect switches (w/400A fuses) to serve the three chillers. The transformers shall be served from the existing 4160-volt switchgear located within the electrical room that currently serves the chillers scheduled for demolition. The transformers shall be served from the existing circuit breakers in the 4160-volt switchgear that served the existing chillers. The fused disconnect switches shall be connected to the secondary side of the 300 kva transformers prior to the chillers. TEN can perform an arc flash and short-circuit study of the revised electrical system as an option. See ECM 6b below.
6. The new piping will by-pass the existing pumps in the Building 5 Pump Room inside the fence to create a variable primary pumping system. Disconnect and remove the existing tertiary chilled water pumps and skid. Remove existing chilled water piping back to points indicated on Detail 2 on drawing MD-102. Disconnect CHW pump power back to its source and label breakers as spare. Remove the CHW pump variable frequency drives.
7. In the Building 5 Pump Room, replace the chilled water piping within and adjacent to the Pump Room, in accordance with the detail 2 on drawing M-102. Provide 10” Schedule 40 welded steel piping and fittings with 1-1/2” thick fiberglass insulation and PVC fitting covers.
8. Install three (3) new 395-ton screw chillers with integral variable frequency drives with new 8” piping and valve trim (Carrier 23XRV4747N4VAA51). One chiller is a spare. Order the chillers with integral main disconnect

circuit breakers and harmonic filters on drives. Include a butterfly valve and modulating control valve on each 8" piping inlet (chilled and condenser water).

9. In the Central Plant, provide new Schedule 40 welded steel piping and fittings with 3" thick fiberglass insulation and PVC fitting covers, to provide variable primary campus pumping. Include new 10" tangential air separator with auto air vent. Refer to drawing M-101 for piping modifications.
10. Connect each chiller to, modify, and reuse the existing refrigerant relief vent piping which extends to the outdoors.
11. Reconnect existing make-up water piping to the system. Provide a new pressure regulating valve with by-pass, pressure gauge and pressure relief valve. Pipe the relief valve to the floor. Provide a new ASME, 80-gallon, bladder type expansion tank and connect to system. Make-up water line should already be protected by an existing reduced pressure backflow preventer.
12. Remove three (3) existing 4160-volt chiller medium voltage motor control cabinets within the Electrical Room.
13. Install three (3) new end suction 650 GPM, 60 HP chilled water pumps with new valves and trim (one pump is a spare). Refer to detail 1 on drawing M-501 for end suction pump installation.
14. Provide variable frequency drives with integral disconnect switches for each of the three (3) 60 HP, 480-volt chilled water pumps. Provide power from new panel "CHWP" located adjacent to the chilled water pumps. Three 3P.100A circuit breakers within panel "CHWP" shall serve the pumps with feeders routed overhead to the VFD and to each pump. Provide 3#1 AWG & 1#8 Grd in 1-1/4" RGS conduit. Provide a flexible conduit connection at each pump motor. All drives shall have harmonic filters.
15. Install a 10-gallon chemical treatment shot feeder with 1" piping and valve trim across the pump header. Mount the shot feeder at a spare space on the pump skid.
16. Provide enable/disable control, modulating control valves (2 per chiller), differential pressure sensor (2 per chiller) and BACnet connections for each of the three (3) chillers. Provide one (1) modulating 4" minimum flow by-pass valve with 4" isolation valves as trim. Extend control to the existing control panels in the Central Plant (assume Electrical Room location). Install control wiring in new overhead EMT conduit.
17. Provide start/stop, differential pressure, current status, and speed controls (4 points) for each new pump. Provide a BACnet connection for each variable frequency drive. Extend control to the existing control panels in the Central Plant (assume Electrical Room location). Install control wiring in new overhead EMT conduit.
18. Provide differential pressure sensors across the mains in the Main Pump Room inside the fence (operating) and on the mains leaving the Central Plant (back-up). Connect to the Niagara Tridium system.
19. Install a refrigerant exhaust monitor and alarm panel in the vicinity of the chillers. Include a sensing line to a location under each chiller. Install alarm lights with horns and laminated nameplate signage in three (3) locations within the main boiler room and at each exterior man door (assume 2 exterior man doors). Provide 120-volt power from existing panel "UT1". Run alarm wiring from the monitor panel to all five (5) horns and strobes overhead in 3/4" RGS conduit. Locate the alarm panel in the vicinity of the pump controls.
20. Install a utility exhaust fan for emergency ventilation of leaked refrigerant. Locate the fan directly on the floor to the south side of Chiller #1, behind an adjacent motor control center. Fan shall be 3,500 CFM utility exhaust fan with 0.375" of static and 3/4 HP fan motor. Provide 24" diameter galvanized steel ductwork up through roof and terminate with gooseneck.
21. Provide power to the fan from motor control center "MCC-2" section #4 with 3#12 & 1#12 grd., ¾" conduit. Provide 3P.15A circuit breaker and size 0 starter within "MCC-2" to serve the exhaust fan. Provide control wiring from the refrigerant alarm panel to the starter in the MCC.
22. Fill and vent the piping system. Restore closed loop chemical treatment to proper levels. Provide an adequate quantity of chemical to treat both the new indoor chilled water piping and the outdoor, overhead chilled water piping system.
23. Start-up and test all equipment. Provide start-up test reports.
24. Balance each pump and chiller. Verify airflow quantity on the refrigerant exhaust fan. Provide certified balancing report.
25. Test and commission the chilled water equipment, system and controls including refrigerant exhaust and alarm. Provide Owner training following commissioning

ECM 6a – New Cooling Towers

(included in selected project)

As an option to this ECM, the following scope is provided if Houtzdale desires to replace the cooling towers.

1. Disconnect and remove or recycle the three (3) existing 410-ton BAC series 3000 cooling towers. Remove uninsulated condenser water pipe, fittings, valves and trim, both inside the Central Plant and outside, to the cooling towers. Disconnect and remove existing cooling tower fan starters (mounted on the outside wall) and wiring from the starters to the cooling towers. Existing conduit shall be retained for reuse. Reconnect new cooling towers to existing panel "CP-PPA:2" and utilize existing conduit. Provide 3P.60A non-fused disconnect switches type NEMA 4X at the cooling towers and connect to panel "CP-PPA:2" with 3#8 & 1#10 grd., in existing conduit for each cooling tower. Retain structural steel cooling tower supports for reuse.
2. Disconnect and remove the three (3) existing 1250 GPM, end suction, 25 HP, condenser water pumps and piping trim from the existing pump skid assembly. Include removal of starters and controls located at the pump skid. Disconnect & remove existing conduit, wiring, and associated equipment to the pump skid.
3. Remove rust, clean and spot prime the three (3) existing cooling tower support frameworks. Install two new 20' long W beams the length of each new cooling tower to provide additional support for the new cooling towers. Weld and bolt the additional supports in place on the existing framework. Prime and epoxy paint the cooling tower framework with the new support beams.
4. Provide three (3) new 400-ton, galvanized steel, BAC Series 3000 cooling towers or equal with 20 HP, 480-volt fans. Provide cooling towers with mechanical float valves and variable frequency drives for the fans. Towers shall be lifted onto the modified steel frameworks.
5. Provide three (3) new 1200 GPM, end suction, 25 HP, 480-volt condenser water pumps with 8" piping trim and variable frequency drives. VFDs for pumps shall have integral disconnects. Install new pumps on the existing pump skid steel.
6. Provide new piping from the chillers (condenser water trim included under chiller replacement project) to the cooling towers, from the cooling towers to the condenser water pumps and back to the chillers. Include new 12" basket strainer with pressure gauge on inlet and outlet. Condenser water piping shall be welded steel outside and may be Victaulic or welded steel inside. Refer to drawings M-101 and M-601 for more detail.
7. Include 2" make-up water piping (copper) from the existing cooling tower water meter inside the Central Plant to each cooling tower. Include manual ball valve at each cooling tower connection. Make-up water line to meter should already be protected by an existing reduced pressure backflow preventer. Insulate and heat trace the make-up water piping only. For the heat trace include one connection to a new 208- or 277-volt circuit breaker in an existing panelboard, one power supply, one thermostat with line sensing bulb, and four end seals to serve all 3 cooling towers.
8. Include 3" drain valve, drain and overflow piping from each cooling tower back to the plant.
9. Mount three (3) new 25 HP variable frequency drives adjacent to the condenser water pumps. Provide power from new panel "CHWP" located adjacent to the condenser water pumps. Three 3P.45A circuit breakers within panel "CHWP" shall serve the pumps with feeders routed overhead to the VFD and to each pump. Provide 3#6 AWG & 1#10 Grd in 3/4" RGS conduit. Provide a flexible conduit connection at each pump motor.
10. Mount three (3) new 20 HP variable frequency drives for the tower fans, on the outside wall, above the pump conduits from the electrical room which come up through the floor. Provide final conduit and wiring connections from the floor, to the VFDs, outdoors to new NEMA 4X disconnect switches to the cooling tower junction box.

11. Provide a new chemical treatment system for the cooling towers. Provide chemical solution pumps and 55-gallon plastic solution tanks for biocide and inhibitor (2 tanks with pumps). Include a water quality controller with digital display and touchpad. Include 1/2" stainless steel chemical injection piping and all required tubing for a complete assembly. Extend 120-volt power to a quad receptacle to serve all services. Mount the chemical treatment assembly at a spare space on the pump skid. Include chemical for initial treatment and full 55-gallon drums at the completion of treatment.
12. Provide controls from the Niagara Tridium DDC control system for the cooling towers and the condenser water pumps. Provide a start/stop control, open/close control valve, current status, and VFD speed control signal (4 points) for each cooling tower fan. Provide a start/stop control, differential pressure, current status, and VFD speed control signal (4 points) for each condenser water pump. Provide condenser water reset controls. Provide a BACnet connection from each VFD (6) to the Niagara Tridium control. Install new control wiring in new overhead conduit. Use RGS conduit for control wiring located outdoors.
13. Balance the inlet butterfly valves on each cooling tower for equal flow. Balance each new condenser water pump. Provide certified balancing report.

ECM 6b – Arc Flash/Short Circuit Study

(optional project ECM, not in current project)

During the RFI phase of the IGA review, it was requested that an arc flash and short circuit study be conducted during the design phase. This scope is an addition to the services provided in our initial Report/Proposal. The creation of the specifications to perform these tests are part of our base services. Our subcontractors will perform the tests and the results evaluated by TEN/Entech for use in final design.

Savings are based upon the more efficient capabilities of the chillers compared to the old McQuay chillers. At part loads, the efficiency disparity between chillers is even higher. Chiller operation was modeled at various loads corresponding to the different times of the years and compared the energy usage of the existing chillers to the new units. Tower savings are derived from more efficient fan operation utilizing VFDs and are incorporated into the modeling.

Savings are also based upon more efficient pumping. Eliminating secondary and tertiary pumps with right-sized pumping and variable flow primary operation will further reduce energy usage. The same simulation will be utilized to determine the differences in pumping energy required over the course of a year.

Operation and Maintenance Impact

Repair records show that the old McQuay units require repair throughout the year. These can sometimes be costly and with all mechanical devices, these repairs will continue to grow as the equipment gets older. Newer chillers have sophisticated monitoring that provide information to the operators to predict when failures could happen – possibly eliminating such an occurrence. The reduction in pumps also provide a reduced cost of operation and failures.

Training

Manufacturers reps and TEN will conduct onsite training of the new plant. There are new components such as drives and more sophisticated monitoring and controls. Training will be comprehensive given the complexity of these machines.

Measurement and Verification

See Measurement and Verification section located in this IGA for specific protocols for identifying savings.

Exclusions

The following general relevant exclusions apply except where explicitly included in the scope of work above:

1. Premium time labor is excluded.
2. Delays due to others are excluded.

ECM 7 – Building Automation System

Existing Conditions

SCI Houtzdale is equipped with an extensive Facility-wide Building Automation System (BAS). The current BAS is Niagara Tridium DDC control system using JACE controllers installed by NRG Building Services. Most of the buildings were initially equipped with DX1 and Solo/DX controllers by Auto-Matrix therefore, the JACE controllers are an overlay on the original DX1 and Solo/DX control panels at the point of use. As an overlay the JACE system is limited to the functions of the original controllers.

Most of the existing DX1 and Solo/DX controllers are over 20 years old; the sequence of operations programming dates back to that time as well. A general overview of the current sequences shows that there is an opportunity for improvement; however, this opportunity would be limited to available memory on the existing controllers. Replacing the outdated controllers would allow for new sequences which would result in improved function and energy savings.

TEN reviewed the existing DDC system graphics for the facility buildings. The following observations were made after this review:

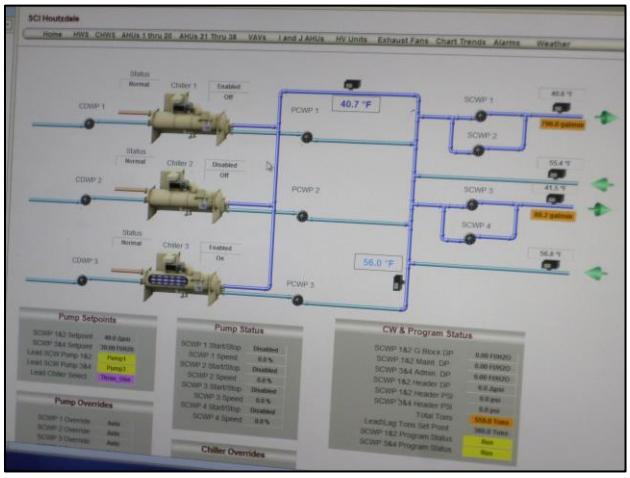

- The current BAS monitors and/or controls the chiller plant, pumping systems, AHUs, RTUs, H&V units, exhaust fans, VAV boxes, domestic hot water generators, and additional HVAC equipment.
- Facility maintenance personnel currently only have access to BAS via the workstations at the central plant and maintenance office.
- AHUs and RTUs operate 24/7; no scheduling or temperature setback are being utilized.
- During our site visit for controls the outdoor air temperature was approximately 70^0 F. The chiller plant was operating, and all the AHUs were in a cooling operating mode which fixed the Outside Air (OA) dampers at fifteen (15) percent. The observed discharge air temperatures were consistent with the design values.
- Calculations were performed to verify the OA percentages based on the return and mixed air temperatures. In several AHUs, the calculate OA varies from the set point fifteen (15) percent. Sensors need to be checked for proper operation.
- During the additional site visits outdoor temperatures were lower and AHUs in the same buildings were operating in different modes. Some of the units were attempting to use the economizer cycle, some units were in cooling mode, and other calling for heat. This is an indication that the control sequences need to be reviewed and tested to ensure proper function. Control sequences need to be evaluated to prevent units from operating heating or cooling during economizer operation.
- During the IGA data loggers were installed on several AHUs to verify operational assumptions. Loggers included room temperature sensors and current monitors to record space temperature and motor amperage.

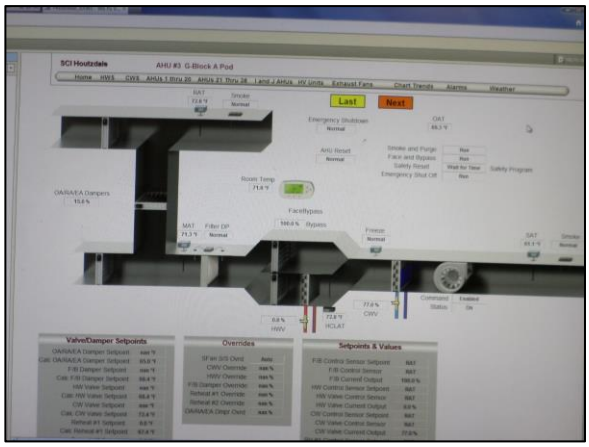

- The data from the data loggers was used in the savings analysis of this ECM.
- Variable Air Volume AHUs have inlet guide vanes for volume control of the supply and return air fans.
- All bathroom, general, and kitchen exhaust fans are constant volume.
- Chillers and cooling towers are monitored by the BAS with the plant operators starting and stopping the chillers based on the cooling load.
- There are no CO_2 sensors and demand control ventilation is not being used at the facility.
- The existing fiber optic communications network consists of cabling installed between the buildings. This fiber is old, and segments are known to be unreliable, and in some instances, have failed.

Proposed Solution

TEN proposes the following measures to enhance and expand the capabilities of the existing BAS system. This will consist of multiple tasks. First, new controls will be installed for new central plant equipment (boilers, chillers, pumps, cooling tower, and meters). Second, the existing DX controllers and fiber-optic cable will be replaced and the BACnet infrastructure will be extended to individual buildings. Last, sequence and operation modifications will be implemented and new variable frequency drives (VFDs) will be installed to generate additional energy savings.

These VFDs will be installed on the seven (7) AHU's currently using inlet guide vanes to generate fan savings and improve air flow modulation. Additional savings will be generated by scheduling AHUs in non-housing areas and implementing discharge air temperature reset.

A more detailed scope of work is provided below.

1. Provide controls & automation required for new steam and hot water boiler plants (ECM-3):

a. Provide automation of two (2) boilers and associated pumping systems. Provide automation for one existing Cleaver Brooks Boiler (converted from steam to hot water) and associated pumping system.
b. Provide an interface to a new steam boiler w/BACnet controls for serving the kitchen and laundry; interface into the existing Kewaunee steam boiler, using the existing digital controls.
c. Provide installation and wiring of master control panel and primary pump interlocks for the hot water boilers. Hot water boilers to be provided with packaged controls, master control panel for lead/lag and staging of the boilers, and BACnet interface.
d. Provide BACnet DDC control panel, controls and control wiring required for the three variable primary pumps serving hot water system. New local pressure transmitter will be reset by existing pressure transmitters located in the buildings.
e. Provide network cabling and integration of boiler controls into the BAS, including database and custom graphics.
f. Provide network cabling and integration of steam boiler panel into the BAS, including database and custom graphics.
g. Wire shut-off switches into the boiler controls.
h. Main system hot water flowmeter to be provided and tied into the BAS
i. Main system steam flowmeter to be provided and tied into the BAS.

2. Provide controls & automation required for new chilled water plant (ECM-6):

a. Provide automation of the chilled water and condenser water systems, including control of three new chillers, three new cooling towers, and three variable-flow primary pumps.

i. Control devices include the following.

1. Chilled Water Automatic Modulating Isolation Valves (3)
2. Condenser Water Automatic Isolation Valves (3)
3. Tower Isolation Valves (3)
4. CHW System Bypass Valve
5. Chilled Water System Flowmeter
6. Local Differential Pressure Transmitter
7. Chillers to be furnished with integral control panel w/BACnet interface for staging/automation and reset control
8. Towers to be furnished with integral VFDs and level controls. The BAS will provide condenser water temperature control.

3. Provide metering of chilled water and hot water BTUs, at each building (ECM-4):

a. Provide and install metering of hot water and chilled water at each building. Note that the fieldhouse (1200 sq.ft.) and the sally port (300 sq.ft.) are not included. A total of thirty BTU meters shall be provided.

b. Each BTU meter to consist of a dual-turbine insertion flow meter, matched temperature sensors (supply and return), and a wall-mount BTU meter with display, I/O terminals and BACnet port (insertion flowmeter to be installed in the pipe by the mechanical contractor).

c. Connect the meters into the existing BAS, or the BACnet infrastructure.

d. Provide setup of meters, programming and custom graphics.

4. Eliminate dependence on old-outdated fiber-optic network:

The existing BAS infrastructure is based on the original, old fiber-optic cabling installed between the buildings. This fiber is old, and segments are known to be unreliable, and in some instances, have failed.

a. Upgrade BAS communication infrastructure by providing new fiber optic cabling between the buildings.

b. Provide rigid conduit, and fiberoptic optic cabling between the buildings, to replace existing cabling. The media convertors will be replaced with 100BASE-TX/100BASE-FX fiber/Ethernet switches.

c. Rigid conduit will be installed on support racks provided with the new hot water/chilled water piping

5. Provide BACnet infrastructure, and extend to individual buildings:

Currently, there are no BACnet; nor LONworks communication capabilities in any of the buildings (except the Central Plant). Such protocols allow for maximum flexibility with a wide range of manufacturers and increase the capabilities of the HVAC equipment. The scope of work will include the transition from proprietary communications to open communications.

a. New Building Control Panels (BCP) will be installed at each building for managing the existing controller networks, while facilitating the use of BACnet within the buildings.

b. Existing fiber/RS-485 media convertors will be replaced with 100BASE-TX/100BASE- FX fiber/Ethernet switches to facility BACnet IP throughout the complex.

c. CAT-6 cabling to be provided from the new switches to the new BCP panels in each building. BACnet MSTP will be installed in the buildings as required for any new BACnet controls installed under the project. Building Control Panels will support BACnet IP (over fiber) at the network level, BACnet IP & BACnet MSTP at the controller level, and American Auto matrix PUP communications for existing controls.

6. **Update front-end software and graphics package from Tridium AX to Tridium N4:**
   a. Tridium has announced that support for Niagara AX will expire in 2021; therefore, the front-end software package and graphics will be upgraded to the latest offered by Tridium (currently N4).
   b. A new server will be installed at the Central Plant and update ofthe system databases, server software licenses and graphics to N4.

7. **Replace aging & obsolete DX controllers in the buildings, while retaining terminal unit controls:**
   a. Remove and replace the DX controllers installed within the buildings. The proprietary DX controllers are old and obsolete, and their failures result in excessive down time and emergency repair costs.
   b. Controllers will be replaced with BACnet DDC controls and tied into the BAS **via the new Building Control Panels.** Existing sensors, actuators and field devices will be recommissioned, and reused where possible.
   c. Existing DX Controllers currently control AHUs, HVs, DHW Monitoring, Smoke Purge/EVAC, Exhaust Systems and miscellaneous monitoring. Replace all DX controllers, install programs into the controllers, validate operation, and rebuild the custom graphics on the Tridium Graphical User Interface.
   d. In order to tie the new controls into the Tridium BAS, the BACnet Infrastructure Upgrade needs to be implemented (Item 5 above).

8. **Implement the sequence of operation modifications to optimize performance of the new and existing controls using reset strategies, economizer optimization and scheduling:**
   a. Provide return air humidity sensors on forty-four (44) mixed-air-single-path AHUs throughout the facility and wire the sensors into the controls system (existing return air temperature sensors to be reused).
   b. Provide enthalpy-based economizer programming in accordance with TEN's sequence of operation.
   c. Provide optimal start, and scheduling modifications for AHU-26 through AHU-38. Demand control ventilation was considered, but ultimately rejected as existing ventilation rates are lower than the design amounts. This conditions does not provide for an adequate payback for inclusion in project.
   d. Provide BACnet network cabling and network switches required to tie the new VFDs into the BAS
   e. Provide reset control of AHU parameters based on terminal unit demand (VAV AHUs).
   f. Provide reset control of Central Plant parameters based on AHU & terminal equipment demand.
   g. Provide database and BAS graphics updates as required.

Maintenance Impact

Implementation of the new BAS equipment and cabling will have a positive impact on facility operation. Obsolete and failing controllers will be replaced, as required, resulting in less downtime of equipment. Communications and cabling upgrades will allow facility personnel to access the BAS from more than one location.

The new VFDs will require periodic cleaning of the heat sinks, filter replacement (if equipped), and re-torque at each main lug. The VFD inherent soft start algorithm will extend the life of the motors. New motors are included with the VFD installations.

Training

Representatives from the control system manufacturer and will address interface procedures, general interrogation, temporary and permanent adjustments, etc. Training will also cover system components that differ from the configurations now in place throughout the facility. TEN will include an electronic video of the training to be referred to for new hires or a refresher. Training will also be provided to address warranty procedures. TEN will deliver to SCI Houtzdale comprehensive operations and maintenance manuals.

Measurement and Verification

IPMVP Option C provides a comprehensive confirmation of savings achieved for this ECM as part of the greater project proposed for the facility at large. See the Measurement and Verification section for detailed protocols.

Exclusions

The following general relevant exclusions apply except where explicitly included in the scope of work above:

1. Premium time labor is excluded.
2. Delays due to others are excluded.

ECM 8 – Roofing Modifications

Energy Conservation Measure Investigated but Not Currently Proposed

Most of the roofing at Houtzdale is beyond the average life of similar systems. As roofs age, the materials degrade and can lead to leaks and energy loss. Houtzdale desires to replace all the roofing. While this is a costly venture, it is a necessity that will need to enact at some point in the near future. TEN can include some or all of the roofing work at Houtzdale, provided it meets the GESA requirements for "Energy Related Cost Savings".

Existing Conditions

The existing membrane roofs of the buildings at SCI Houtzdale were all installed as part of the original construction. Therefore, all the membrane roofs are over twenty years old and are no longer covered by a manufacturer's warranty.
During the site visits numerous areas of standing water were noted on each of the roofs surveyed. This is an indication of a failure in the roofing system. As shown in the photo the all the water ponding on the roof is away from the roof drain indicating that this area has steeled below the drain level which should be the lowest point of the roof.

Proposed Solutions

TEN recommends the installation of a new fully adhered rubber roofing system over the existing roofs. The new roofing system will include 3.5 inches of ISO insulation, 0.060 E.P.D.M. membrane, flashing, pipe collars, metal coping, stainless steel counterflashing, termination bar, fasteners, and adhesives. The new roofing system will come with a twenty-year manufacturer's warranty.

This scope is currently priced without small diverse business participation and includes a small allowance for replacing existing damaged insulation. The actual amount of insulation needing to be replaced will be determined during the construction as the roofing membrane is removed.

The following buildings are included in this scope:

Bldg A Housing	Bldg H Housing
Bldg B Housing	Bldg. I Housing
Bldg C Housing	Bldg J Housing
Bldg D Housing	Bldg K Housing
Bldg E Housing	Bldg 1 Administration
Bldg F Housing	Program Services
Bldg G Housing	Central Services/Intake

Maintenance Impact

The new roofing system will have the same maintenance requirements as the existing roofs. No new maintenance procedures will be required.

Training

No training is anticipated for this measure

Measurement & Verification

Option C is to be utilized for this measure and is further described in the Measurement and Verification Section.

Exclusions

The following general relevant exclusions apply except where explicitly included in the scope of work above:

1. Premium time labor is excluded.
2. Delays due to others are excluded.

ECM 10 – Kitchen HVAC Modification

Energy Conservation Measure Investigated but Not Currently Proposed

Existing Conditions

The kitchen at SCI Houtzdale currently operates approximately twenty hours per day. Cooking activates generate heat, smoke, and steam which must be exhausted from the building. Any air that is exhausted from the building must be replaced or negative pressures will result in the building.

The original design of the kitchen as SCI Houtzdale included nine major short circuit kitchen exhaust air hoods with direct makeup air. A summary of the kitchen hoods is provided below.

Existing Kitchen Exhaust Hoods		
Unit	Exhaust CFM	Supply CFM
KF-1	2,400	1,200
KF-2	6,900	3,450
KF-3	8,125	4,060
KF-4	3,675	1,840
KF-5	7,000	3,500
KF-6	6,300	3,150
KF-7	3,000	1,500
KF-8	4,650	2,325
KF-9	4,900	2,450
Total	46,950	23,475

As shown on the table the direct makeup air accounts for fifty percent of the required CFM needed to replace the exhaust air. The remaining air must be supplied form other sources either by direct conditioning of the space of via transfer air from nearby locations.

In the case of SCI Houtzdale, the remaining air is supplied from transfer air from the dining rooms. There are three inmate dining rooms and one staff dining room that are conditioned by four AHUs which are shown on the table below.

Dining Room Existing AHUs		
AHU #	Supply Air	Unit
AHU-28	8,400	CFM
AHU-29	4,820	CFM
AHU-30	8,400	CFM
AHU-31	6,150	CFM
Total	27,770	CFM

In addition to the AHUs providing transfer air, there are two Heating and Ventilation (HV) units that provide direct supply air to the kitchen. HV-2 serves the meat and vegetable preparation rooms and the rear hallway. This unit has a rated capacity of 3,590 CFM and is a 100 percent recirculation unit which pulls air from the three inmate dining rooms. HV-1 which provides space conditioning for the Laundry; also, by design supplies 5,500 CFM to the rear of the kitchen. HV-1 has a total capacity of 15,370 CFM with 10,600 CFM of outside air.

Based on this design of fifty percent of the makeup air being transfer air minimum of 23,475 CFM is required to make up for the exhaust air. The four AHUs supply 27,770 CFM however 3,590 CFM is needed for HV-2. This reduces the available CFM from the dining rooms to 24,180 CFM of approximately all the air supplied to the dining rooms is required as makeup air. This makes the 5,500 CFM of outside air supplied from HV-1 critical to maintain positive pressurization in the dining rooms and kitchen.

During the IGA, TEN located the 36”x24” supply grate from HV-1 serving the kitchen and noted that it is not providing the design CFM to the kitchen. HV-1 is currently providing a much lower amount of transfer air, therefore the required air is being pulled from the dining rooms.

Proposed Solution

TEN evaluated the current operational needs of the kitchen and the use of the existing kitchen exhaust air hoods compared to the original design. Since the original design the kitchen has switched to a heart healthy menu. For this reason, fried foods were eliminated. This change effected the operational requirements of KF-4 and KF-9. Additionally, there was a change to the cooking operation in the special diet area served by KF-6.

Based on the change in operation, KF-6 and KF-9 could be replaced with much smaller exhaust air fans which would lower both the exhaust air and makeup air requirements.

Currently, there is no equipment under KF-4 that requires an exhaust fan. However, since KF-4 is part of a double island hood it needs to remain in operation or it will adversely affect the operation of KF-5. If KF-4 is not in operation KF-5 would then be considered a single island hood and have insufficient operational capacity.

Cleaning of the AHUs, HV units, and exhaust fans serving the kitchen should be performed. Then air balancing should be performed to verify the design airflows. Reducing the makeup air requirements from KF-6 and KF-9 would allow for return air to be used in the AHUs serving the dining room.

After this work is completed changes to the kitchen exhaust air hoods can be evaluated for reductions in exhaust and makeup air. Systems will be rebalanced and analyzed for possible next steps. Since this is primarily a constant volume system, the balancing will be set for design requirements.

Operational Impact

While there shouldn't be any change in operational needs, it is evident that periodic cleaning of supply and exhaust systems are necessary to maintain the proper air flows.

Training

Because there are no real changes to operation or equipment, training will be concentrated on the new economizer operation of the air handlers. This can take place with the BAS overall training sessions.

Measurement and Verification

IPMVP Option C provides a comprehensive confirmation of savings achieved for this ECM as part of the greater project proposed for the facility at large.

Exclusions

The following general relevant exclusions apply except where explicitly included in the scope of work above:

1. Premium time labor is excluded.
2. Delays due to others are excluded.

ECM 11 – AHU Coil Cleaning and Restoration

Energy Conservation Measure Investigated but Not Currently Proposed

Efficient HVAC equipment is necessary to achieve optimum savings and reduced O&M costs resulting from temperature complaints or equipment failures. All equipment has some requirement of ongoing maintenance to keep efficiency levels at desired levels. Additionally, equipment will degrade over time and addressing the impact of the degradation is necessary for efficiency. Coil cleaning and AHU restoration address both these goals.

Existing Conditions

During our facility audit of the buildings at SCI Houtzdale, we routinely inspect Air Handling Units (AHUs) to check the position and function of outside air and return air dampers. As a result of this process we noted the ductwork in most systems would benefit from cleaning. Additionally, the insulation lining the ductwork is breaking down and depositing downstream in low velocity areas, coils or other obstructions in its path.

A more intensive inspection of the AHUs was conducted later in the IGA phase and TEN provided SCI Houtzdale the results of the inspection with recommendations for coil cleaning and repairs to insulation and condensate pans. Dirty Coils reduce the ability of the coil to transfer the heating or cooling energy to the air stream resulting in excessive run times to meet the heating and cooling loads. Additionally, the added resistance on the coil causes an increase in static pressure resulting changes to the fan efficiency.

Proposed Solution

TEN proposes the AHU coils be cleaned to restore the effectiveness of the heat transfer surfaces and ensure the efficient operation of the new boilers and chillers.

The coils will be cleaned utilizing an environmentally friendly PH neutral, probiotic nontoxic biodegradable coil cleaner, to inhibit bio-film growth. The proposed cleaning method utilizes probiotics, enzymes and steam where necessary to completely clean through the center compaction with no harmful effects to the coil.

SCOPE OF WORK FOR AHU REFURBISHMENT:

1. **Coil Restoration Program:** Cleaning and coating cooling and evaporative coils on (10) roof top units (RTU's), (38) AHU's, & (4) heating and ventilating units (HVU's) associated with (17) Buildings with ***Aeris Guard™ Patented Enzymatic Coil Cleaner and Coil Coating***. These will treat all microbial and fungi growth within the coils, it will also inhibit Bio-Film Growth. This treatment is Non-Corrosive to the coil, nontoxic and biodegradable. This treatment will bond to the coil fin for no less than one (1) year. This treatment will be removed by condensate over time or with coil cleaner. Heating coils will be cleaned but not coated.
2. Clean and treat (10) RTU, (38) AHU's, & (4) HV'S, all HVAC components will undergo intensive cleaning with HEPA vacuum. After HEPA vacuum, all non-porous surfaces in the HVAC components will be wiped and cleaned with Aeris Guard™ Surface Cleaner cleaners use patented antimicrobial multi-enzyme technology, which is non-toxic & non-acidic to breakdown and digest biofilm and other contaminants. All filters will be replaced at time of service with customer provided filters.
3. Remove and replace approximately (15,168) sq ft of insulation on (42) AHU's & HVU's due to deterioration with a completely closed cell insulation that will not support mold growth within it and is cleanable called "IMCOA"
4. Encapsulate insulation that is fouled but not deteriorated
5. Disposal of waste materials will be placed in on site waste containers provided by Owner.

6. Remove a maximum of (144) sq ft of insulation (1 Reheat coil per unit) due to suspect microbial growth around coil by AHU units: 4, 5, 6, 7, 8, 9, 10, 11, 12, 13, 14,15, 16, 17, 18, 19, 20, 21, 26, 37
7. Provide trained workers, in Hazardous Communication, Lock-out/Tag-out, Respiratory Protection, Confined Space Entry, and Fall Safety as defined by OSHA. *All applications of CRT coatings will be performed by CRT certified A/C Hygiene Specialists.*
8. A written report with before and after picture and any finding and recommendations

Operation and Maintenance Impact

While the is no change in industry-recommended O&M tasks, periodic cleaning is required for the entire HVAC system to operate correctly. Houtzdale should inspect interiors of HVAC units every 3-5 years to ensure that conditions currently being experienced do not occur in the future. Besides the impact of occupant comfort, the overall efficiency of the heating and cooling systems can be adversely impacted.

Training

Training will be conducted to teach the maintenance personnel how to inspect the systems for cleanliness and detection of degradation.

Measurement and Verification

IPMVP Option C provides a comprehensive confirmation of savings achieved for this ECM as part of the greater project proposed for the facility at large. See Measurement and Verification section for more details on specific protocols

Exclusions

The following general relevant exclusions apply except where explicitly included in the scope of work above:

1. Premium time labor is excluded.
2. Delays due to others are excluded.

ECM 12 – Domestic Water Booster Pumps Replacement

Energy Conservation Measure Investigated but Not Currently Proposed

Existing Conditions

During our facility audit at SCI Houtzdale, we inspected the main pump house which houses the domestic water booster pumps.

Domestic water from the water authority is housed in a 1,000,000-gallon onsite storage tank. A Syncroflo booster pump system is utilized to maintain pressure in the domestic water distribution system.

The existing booster pump system is a staged system which uses four pumps. One 20 HP pump is base loaded and there are three 40 HP pumps that are staged on as necessary. The system currently maintains the system pressure at approximately 100 psig.

TEN installed data loggers on the four motors for a period of approximately two weeks. The logger data indicates that the 20 HP pump operates continuously, and one 40 HP pump will run as needed along with the 20 HP pump. In rare instances two 40 HP will operate however, this operation was only for a few minutes.

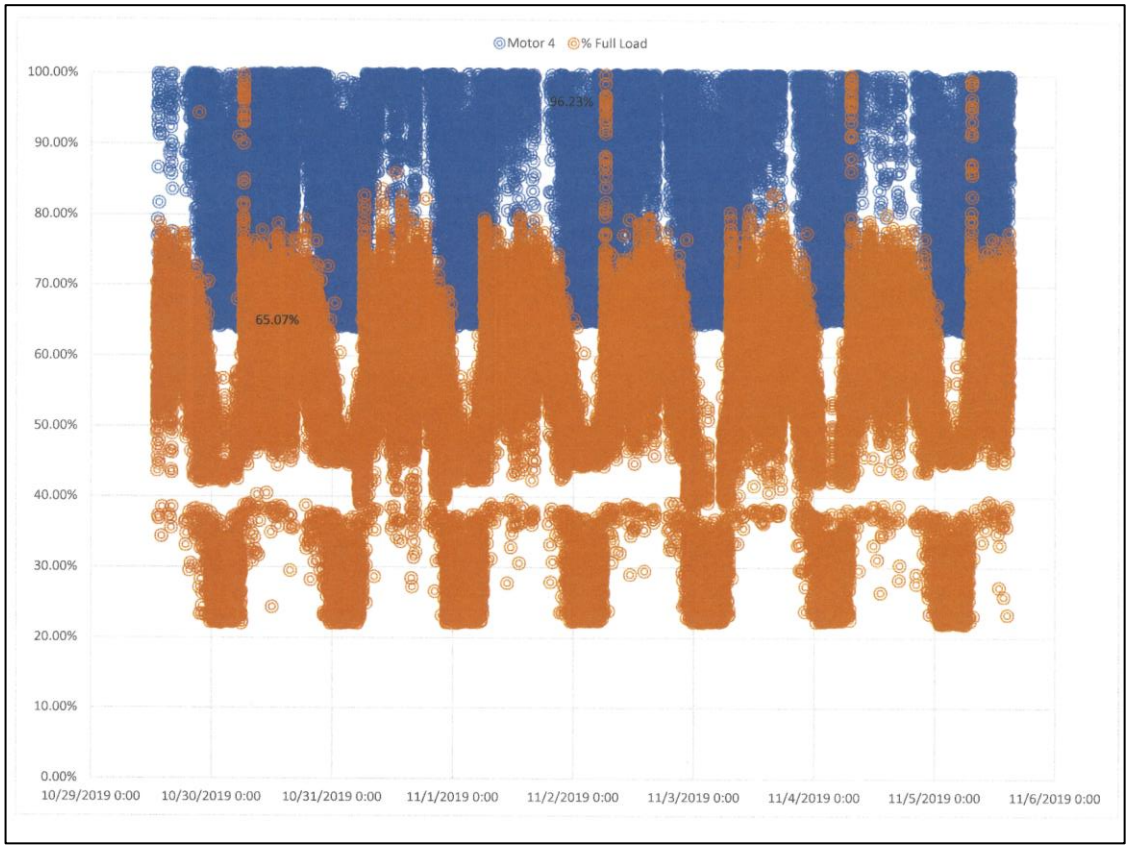

The chart above shows the loading of the 20 HP motor (Motor 4) in blue. The Percent full load is based on operating the 20 HP motor with one 40 HP motor. Typical daily operation ranged from twenty to 80 percent loading with a two-pump operation.

Proposed Solution

This measure calls for the installation of a new domestic water booster pump system. The new booster pump will be resized to match the facilities operational needs. The new booster pump system will utilize two pumps operating in a lead / standby configuration with VFDs for flow control.

VFDs are a more efficient way to match changing loads verses the existing staged configuration. The new pumps will provide energy savings at part load conditions.

Operation and Maintenance Impact

While no major impact is predicted, the reduction of pumps as well as the running of pumps at reduced amperage draws should help reduce any maintenance needs. VFDs need to be inspected annually for connection integrity and general cleanliness.

Training

Training will concentrate on the proper operation of the new pump station and maintenance needs. Training can be combined to overall Central Plant training.

Measurement and Verification

IPMVP Option C provides a comprehensive confirmation of savings achieved for this ECM as part of the greater project proposed for the facility at large

Exclusions

The following general relevant exclusions apply except where explicitly included in the scope of work above:

1. Premium time labor is excluded.
2. Delays due to others are excluded.

ECM 13 – Visitor's Lot Electric Vehicle (EV) Charging Station

Energy Conservation Measure Investigated but Not Currently Proposed

Existing Conditions

In 2019, Governor Wolf signed the Executive Order 2019-1 "Commonwealth Leadership in Addressing Climate Change and Promoting Energy Conservation and Sustainable Governance" Among the many provisions intended to address the climate change issues affecting Pennsylvania and the world at large, the Order asks DGS to "Research, recommend, and develop vehicle fleet sustainability practices and metrics consistent with leading fleet accreditation programs".

TEN has been asked to develop a project to address this provision of the Order.

Proposed Solution

This measure calls for the installation of a two-port Level 2 electric vehicle (EV) charging station at the visitor's parking lot. Specifically, the scope of work shall include:

1. Two port EV charging station with a 240 volt single phase 40amp circuit for each port. (Either BTC Power or EV Box stations with cable management system) installed with a concrete foundation and conduit to independent circuit panel box.
2. GreenLots Metering and Power Metering system that can work with multiple hardware options. No billing cost to DOC vehicles but capable of accommodating other vehicles with electricity billed to a visitors credit card.
3. Concrete installed bollard between station and parking.
4. 480 volt 3-phase power run in conduit from the central plant to a step down transformer and electrical enclosure with panel box to accommodate the initial dual port station with capacity to add stations. (step down transformer & enclosure located near visitor lot).
5. Each additional two-port station with bollard and cable management system is $24,127. This illustrates that the majority of the cost is associated with getting the 240 volt single phase power to the visitor lot.
6. A lower cost is possible if the stations are located near the central plant without public access.
7. Options were considered to run power through the existing perimeter road lighting conduit (no room) or from the Administration Building penthouse mechanical room (panel spaces available but not capacity).

Operation and Maintenance Impact

The charging station shall be maintained by the State, however such responsibilities are mainly to keep the area free and clear of debris and prevent damage to the charging station components. The BTC Power and EV Box power station equipment includes a 3-year warranty.

Training

Training will concentrate on the proper operation of the new charging station and any maintenance needs.

Measurement and Verification

No savings are claimed for this measure. An annual base year adjustment will be required to account for electricity used by DOC and other vehicles using the charging station. This information can be provided by the Greenlot metering system.

Exclusions

The following general relevant exclusions apply except where explicitly included in the scope of work above:

1. Premium time labor is excluded.
2. Delays due to others are excluded.

Measurement and Verification Plan

TEN shall provide measurement and verification services to confirm project savings levels. Due to the seasonal nature of the savings associated with this project, a full operating year will be required to confirm the operating assumptions and annual savings level for the Project.

TEN follows the International Performance Measurement & Verification Protocol (IPMVP), the industry standard for development and implementation of M&V plans in energy savings projects. IPMVP provides four options for determining savings, Options A, B, C, and D. TEN shall verify all energy and water savings amounts after ECM commissioning for this Project in accordance with IPMVP Option C. The monthly Energy Unit Savings are calculated by subtracting the monthly post-retrofit consumption from the corresponding monthly Baseline consumption and will be presented in an annual M&V report. During the Construction Period, Option C Energy Unit Savings will be calculated each month beginning at construction start and ending at Final Acceptance.

Option C verification techniques calculate savings by comparing the post-retrofit overall energy use in a building or facility with pre-retrofit energy Baselines. This methodology captures all the savings under a particular meter and requires ongoing monitoring of the facilities.

Measurement and Verification Methodology

Utility	IPMVP Option
Electric	Option C
Coal	Option C
Fuel Oil	Option C
Propane	Option C
Water	Option C
Compressed Natural Gas	Option C

*Because the water is billed by the water supplier a year after usage occurs, the PSFEI reports and the water meter installed by TEN will be used to measure the water flowing into the water tank, not the water supplier utility bills.

Baselines used for measurement and verification of savings are detailed in Attachment 1, Part 3.

Many other factors influence the baseline utility usage and the usage in subsequent years. Since the measurement and verification plan is an IPMVP Option C, these factors should be documented both prior to and after construction is completed. One of these factors is resident and staff populations. According to the PSFEI Utility Usage reports, the following are the populations for the 2018 calendar year.

Resident and Staff Populations for 2018

Month	Residents	Staff
January	2508	600
February	2538	600
March	2527	610
April	2541	610
May	2514	610
June	2537	615
July	2534	615
August	2528	621
September	2524	605
October	2527	605
November	2521	610
December	2511	610

Guaranteed Savings Reconciliation

Reconciliation of the energy savings will take place on an annual basis, based upon the measurement and verification protocol identified above.

If TEN is unable to reconcile missed savings during a reconciliation period then TEN may undertake, at its own expense, actions to bring that measure into compliance with the savings guarantee - including making necessary adjustments to the missed savings measure, repairing equipment (or replacing the equipment altogether). If these efforts do not result in savings compliance, then TEN will pay the missed savings amount directly to SCI Houtzdale for each reconciliation period during the term of the contract.

Environmental Benefits

Below are various annual environmental benefits of the selected project. Figures calculated through EPA website (https://www.epa.gov/energy/greenhouse-gases-equivalencies-calculator-calculations-and-references)

A.	4,492	Tons CO2e
B.	74,274	Equivalent Trees Planted
C.	953	Equivalent Cars Removed from The Road

Working Hours:

Any correctional work requires tool checks on a daily basis and, to minimize both the impact to the Institution along with the delays associated with tool check, TEN's project schedule is based on a four (4) day per week, 10 hour per day, Monday thru Thursday work schedule. The actual workdays during weeks with holidays will be adjusted accordingly. For example, a Monday holiday will shift the work-week from Monday thru Thursday to Tuesday thru Friday. Weeks with multiple holidays, such as Thanksgiving and the day after, and the start of the 2020 deer season, will be coordinated with the Institution.

Our schedule is built with the assumption that there will be planned and unplanned non-working days due to holidays, facility lock-downs, and inclement weather. Our plan accounts for the twelve (12) Commonwealth of Pennsylvania holidays as scheduled non-working days. Furthermore, our plan has allotted twelve (12) days annually for facility-wide shutdowns/lock-outs and five (5) days annually for inclement weather. Specific scheduling strategy follows:

ECM 1 & ECM 2: LED Lighting Upgrades and Lighting Controls

Lighting work is planned to be done as one of the initial measures. The submittal process will be relatively quick and material delivery time is relatively short. TEN will coordinate these measures initially with Houtzdale to maximize the escort availability and labor staffing for optimum efficiency.

ECM 3.1: CNG Conversion

A key to obtaining construction period savings for this measure is the ability to commence work immediately after contract and financing execution. To achieve this, TEN is proposing that all agreements with a chosen supplier be finalized by the time the GESA is fully executed. Additionally, TEN proposes that the engineering required to finalize the design and obtain Houtzdale/DOC approvals be completed before final GESA contract execution. To permit this, TEN asks that DOC consider a pre-contract authorization to commence engineering, understanding that such costs will ultimately be born in the financed package, and in part included within a mobilization invoice to be paid when the escrow account is funded.

Once the authorization is obtained, and engineering completed and accepted, TEN, TEN's subcontractors and the CNG supplier can quickly start construction of the station. Since this work is mainly outside the fence, we expect work to flow quickly, in coordination with Houtzdale/DOC. Our schedule is based upon a working conversion by Fall of 2020.

ECM 3.2: Steam Plant Upgrades

The steam plant work shall be done as one of the last items in the boiler house. It is important to keep the steam plant in operation throughout the transition of the hot water system from steam based to direct fired through dedicated hot water boilers. It is intended to keep the two existing fire tube boilers in operation (in milder weather) allowing for the removal of the coal fired boilers. With the removal, the hot water boilers can be installed. Afterwards the pumping changes to the hot water system will be conducted. Thus, until the hot water plant is completed and operational, the remaining steam boilers will continue to produce steam. The installation of the new boiler and conversion of the 800 hp Cleaver Brooks to hot water operation will then be performed.

ECM 3.3: Hot Water Plant Upgrades

In order to install the new hot water boilers and the associated pumping, the existing coal boilers need to be removed. This will be accomplished when the entire system can operate with the remaining two fire tube boilers in milder weather. The coal boilers will be shut down and removed and the new hot water boilers installed. The new hot water pumps will also be installed and tied in to the distribution center. Once this work is completed and the controls verified, the hot water will be created and pumped by the new equipment and the existing heat exchanger and pump sets decommissioned and removed. Once the hot water requirements are removed from the steam system and the new steam boiler installed, the remaining Cleaver-Brooks boiler will be converted to hot water operation and tied into the hot water distribution.

ECM 4.1 & 4.2: Hot Water and Chilled Water Distribution

The TEN team has designed a new piping system for both the hot water and chilled water distribution. This was intentionally done in a way to allow the new system to be installed while the existing system continues to serve the facilities. Thus the work for this project is prioritized on ensuring full installation and operation with the planned construction period. Pre-contract engineering is requested so that this extensive work can be completed in time.

ECM 5: Water Conservation

Completing water conservation in 2020 is imperative to obtaining the anticipated savings from the Water District's O&M costs. By completing the work in 2020, partial savings will be realized in 2021 and full savings starting in 2022. Since the scope of work is controls only (no plumbing fixtures) with no access requirements to the cells, work should progress well, given an adequate level of escort(s). Our subcontractor plans on deploying two crews on a regular basis to install the control devices.

ECM 6 and 6a: Chilled Water Plant Upgrades

All work regarding the chilled water plant is seasonally restricted. The work is planned to start in late October 2020 and continue through early spring 2021 when space cooling is not required.

ECM 7: Building Automation System Upgrades

Controls work inside the fence is independent of other work in the project. Thus this portion of the controls scope will continue mostly in the beginning of the project so that there are enough technicians available to perform the work in the central plant later on. As equipment is installed in the central plant, resources need to be diverted from the main complex to allow for the timely installation and start up of each system, all which need operating controls.

OTHER SCHEDULING CONSTRUCTION ISSUES:

TEN & Contractor's Site Office Trailer:

TEN and our major subcontractors will require a site office and storage trailer(s) for the staging of the work. It has been discussed with the Institution that such trailers would be located within the secured area adjacent to Building 5.. TEN anticipated one (1) office trailer and upwards of four (4) storage trailers. The project schedule is based on all site work activities within the perimeter occurring from these trailers. An additional construction area is anticipated near the central plant and new CNG station, both outside the fence.

Worker Break Areas and Lunch, Drinking Water And Sanitation Facilities:
TEN recognizes that workers cannot simply go to a break or lunch trailer inside the fence nor can the Institution expect that the workers leave once inside the perimeter. Therefore, breaks and lunch will occur either at the work site or within an area designated by the Institution. TEN may opt to have the Contractor's supply drinking water containers stored in the TEN office trailer within the secured perimeter. Also, all workers are presumed to be able to utilize sanitation facilities within the Institution not requiring portable sanitation facilities, other than possibly some located with the office trailers outside Building 5

Material Deliveries:
The Institution has suggested that lost time could be minimize by transferring materials outside the fence to the Institution's trucks where it would be checked prior to entrance into the Institution. TEN's project schedule is based on such means of deliveries.

Access To Individual Cells And/Or Day Areas For The Work:
TEN recognizes that the inmates cannot be moved to a different building to enable TEN to perform its work. However, much of the work will be within individual cells and/or day areas. TEN's project schedule is based on the Institution's ability to make such areas available on a daily basis to enable the work to be performed. The access requirements will be coordinated with the Institution on a weekly basis.

Attachment 1: GESA Contract Schedules

The following conceptual schedules illustrate the anticipated flow of work for this project. They are initially drafted around an April 1st Notice to Proceed (NTP) and will be updated for the project kickoff meeting immediately following a fully executed GESA.

1. High level illustration
2. Summary of steam and hot water implementation
3. Additional CPM detail for boiler and distribution system work

ID	Task Mode	Task Name
1		**ILLUSTRATES INTERCONNECTED TASKS... NOT DURATIONS**
2		
3		**CNG Site Design & Installation**
4		Start
5		Establish CNG Contract Provider (DOC)
6		Prepare Design Drawings (Letter of Intent)
7		***Fully Executed Contract & NTP***
8		Secure Necessary Permits
9		Installation of CNG Site Equipment & Distribution to Plant
10		Interconnect NG to existing Kewanee 500 BHP & CB 800 BHP Boilers
11		Commission NG Operations on Kewanee & CB Boilers (recheck oil ops)
12		***Note....Kewanee & CB boilers will remain connected to and serve the steam distribution systems until new HHW Boilers installed***
13		
14		**Boiler Design, Demolition & New Installations**
15		Prepare Final Design Drawings (Concurrent w/ CNG Design)
16		*> One (1) New 350 BHP Steam Boiler*
17		*> Two (2) New 350 BHP HW Boilers*
18		Secure Necessary Permits
19		Release boiler orders
20		Demolition of B&W Coal Boilers 1 & 2 and ancillary equipment
21		Installation of HW & Steam Boilers, ancillary equipment and interconnect to distribution piping within plant
22		Transition existing HHW System to new HW Boiler service
23		***Note...Once new HW Boilers are fully operational demolition of HHW HX equipment demolition can proceed***
24		Commission new 350 BHP Steam Boiler
25		***Note...Once the new 350 BHP Steam Boiler is commissioned, existing CB 800 BHP steam boiler can be converted to HW***
26		
27		**Campus-wide Distribution Piping**
28		Conduct Ground Penetrating Survey to establish pipe support locations
29		Conduct Structural verification of roof structures to confirm load-bearing design/capacities
30		Prepare Design Drawings
31		Secure Necessary Permits
32		Fabricate & Erect Pipe Carrier Structures
33		Installation of new Steam/Condensate piping services to Bldg 5
34		***Note... interconnect with existing steam and condensate piping will require hot-taps or shutdown for final interconnect***
35		Installation of CHW & HHW Distribution throughout campus
36		***Note... Existing CHW & HW Tertiary Pump system will remain functional as Bldgs are transitioned to new HW Distribution System***

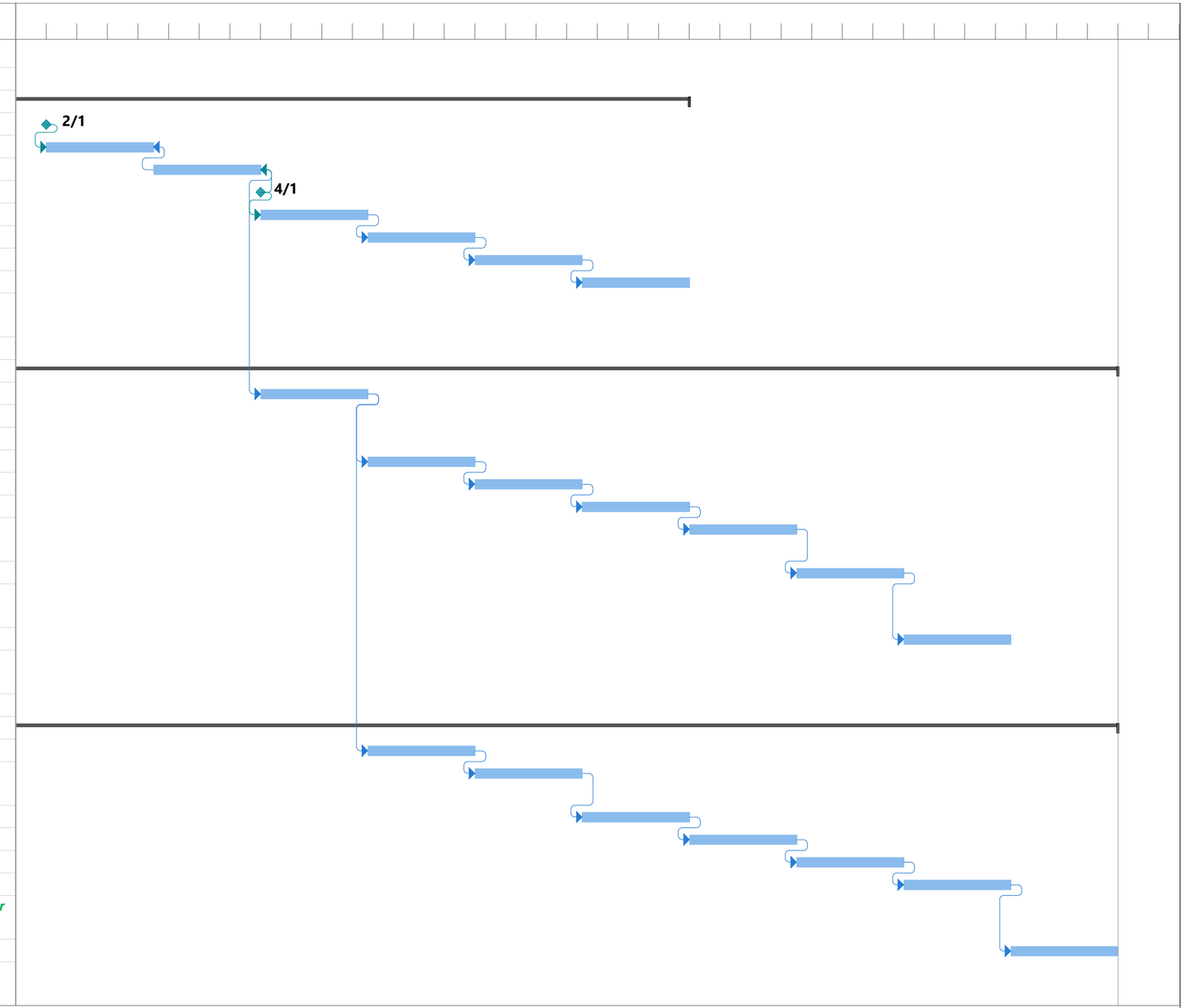

SCI Houtzdale
Central Plant / Distribution Sequencing

Task	Project Summary	Manual Task	Start-only	Deadline
Split	Inactive Task	Duration-only	Finish-only	Progress
Milestone	Inactive Milestone	Manual Summary Rollup	External Tasks	Manual Progress
Summary	Inactive Summary	Manual Summary	External Milestone	

Attachment D - Summary Schedule STM/HW Implementation

ID		Task Mode	Task Name	Duration	Start	Finish	Predecessors
1			**STEAM & HOT WATER BOILER IMPLEMENTATION**	**257 days**	**Wed 4/1/20**	**Thu 3/25/21**	
2			DS1000 - FINAL DESIGN	5 days	Wed 4/1/20	Tue 4/7/20	
3			DS1010 - STRUCTURAL VALIDATION	5 days	Wed 4/1/20	Tue 4/7/20	2SS
4			DS1020 - CNG SYSTEM DESIGN	60 days	Wed 4/1/20	Tue 6/23/20	2SS
5			P1000 - L&I APPROVAL	5 days	Wed 4/8/20	Tue 4/14/20	4SS+5 days
6			PRO1010 - FAB & DELIVER HOT WATER BOILERS (2)	65 days	Wed 4/8/20	Tue 7/7/20	5SS
7			PRO1020 - FAB & DELIVER STEAM BOILER (1)	65 days	Wed 4/8/20	Tue 7/7/20	6SS
8			PRO1040 - FAB & DELIVER PUMPS	30 days	Wed 4/8/20	Tue 5/19/20	7SS
9			PRO1050 - FAB & DELIVER CNG SKID	40 days	Wed 4/8/20	Tue 6/2/20	8SS
10			PRO1060 - PROCURE PIPE	15 days	Wed 4/8/20	Tue 4/28/20	9SS
11			HW1000 - FAB HOT WATER PIPING	103 days	Wed 4/22/20	Fri 9/11/20	10FS-5 days
12			HW0500 -INSTALL SYSTEM INTERFACE TAPS IN BLDG 5 MER	6 days	Wed 4/22/20	Wed 4/29/20	11SS
13			CNG1000 - CNG STATION SITE WORK	30 days	Wed 6/17/20	Tue 7/28/20	4FS-5 days
14			CNG1010 - CNG GAS PIPING	30 days	Wed 6/17/20	Tue 7/28/20	13SS
15			CNG1020 - INSTALL CNG SKID & PIPING	40 days	Wed 6/24/20	Tue 8/18/20	4
16			CNG1030 - START-UP CNG SKID	5 days	Wed 8/19/20	Tue 8/25/20	15
17			CP DEMO1000 - DEMO COAL FIRED BOILERS	25 days	Wed 4/8/20	Tue 5/12/20	9SS
18			CPS1000 - INSTALL HOT WATER BOILERS	25 days	Wed 7/8/20	Tue 8/11/20	6
19			CPS1010 - INSTALL STEAM BOILER	15 days	Wed 8/12/20	Tue 9/1/20	18
20			A0120 - INSTALL NEW HW DISTRIBUTION PUMPS	15 days	Wed 5/20/20	Tue 6/9/20	8
21			A0100 - INSTALL HW FEED IN C.P. FOR INTERIM CONNECT F.A.BLDG1	12 days	Wed 6/10/20	Thu 6/25/20	20
22			A0110 - INSTALL HW FEED TO WAREHOUSE BLDG 13	8 days	Fri 6/26/20	Tue 7/7/20	21
23			A1050 - HOT WATER PIPING REVISIONS CENTRAL PLANT	30 days	Wed 8/12/20	Tue 9/22/20	18
24			NEW A1060 - INSTALL HW & STM INTERCONNECT PIPING FROM CP TO BLDG 5 MER	60 days	Fri 6/26/20	Thu 9/17/20	21
25			A1080 - START HOT WATER SYSTEM & NEW STEAM BOILER	0 days	Fri 9/18/20	Fri 9/18/20	24
26			BOILER START-UPS (10-DAY ALLOWANCE FOR EACH BOILER)	30 days	Fri 9/18/20	Thu 10/29/20	25
27			NEW A1090 - CONVERT EXISTING CB BOILER TO HOT WATER	30 days	Fri 10/30/20	Thu 12/10/20	26
28			NEW A1100 - CONTINUE RUNNING BALANCE OF DISTRIBUTION PIPING	110 days	Fri 9/18/20	Thu 2/18/21	24
29			NEW A1200 - CUTOVER INDIVIDUAL BLDG SYSTEMS	25 days	Fri 2/19/21	Thu 3/25/21	28

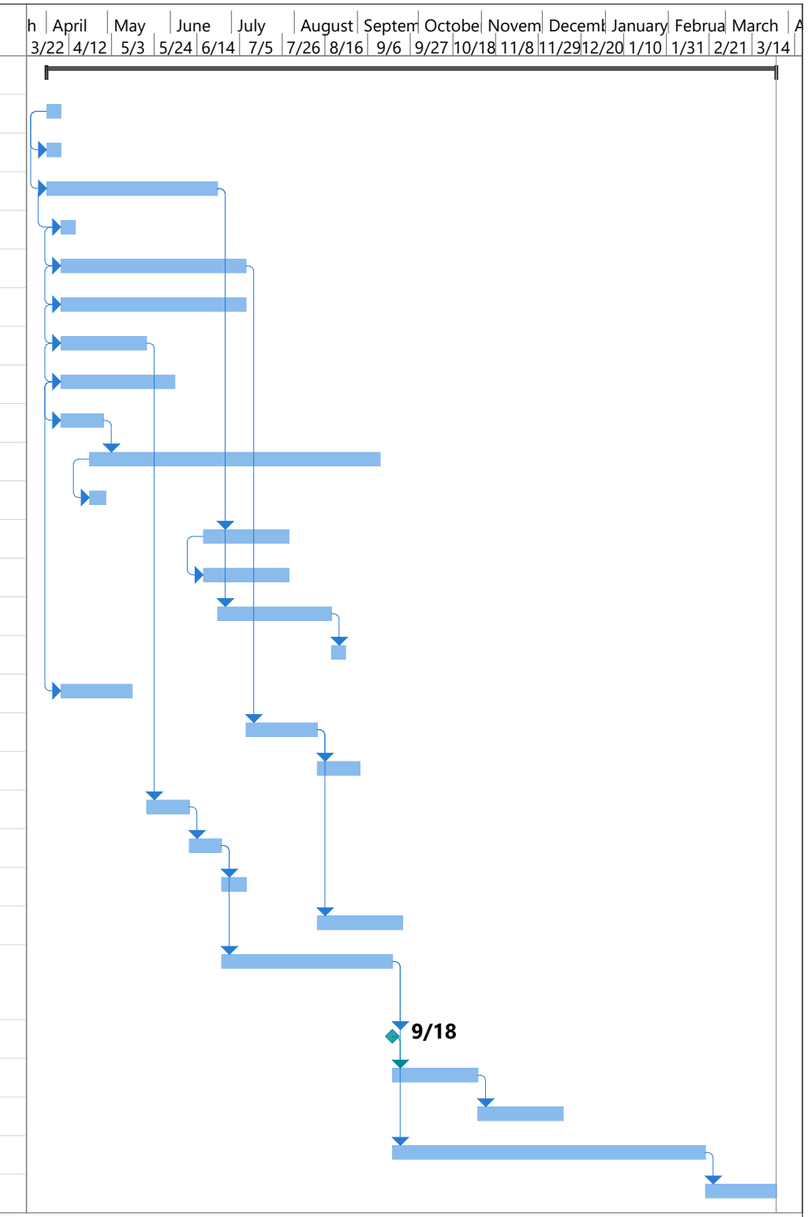

SCI HOUTZDALE
PRELIMINARY STEAM & HOT WATER SYSTEM IMPLEMENTION CONCEPT

Task	Inactive Task	Manual Summary Rollup	External Milestone
Split	Inactive Milestone	Manual Summary	Deadline
Milestone	Inactive Summary	Start-only	Progress
Summary	Manual Task	Finish-only	Manual Progress
Project Summary	Duration-only	External Tasks	

SNELICK CONSTRUCTION SERVICES, LLC

McCROSSIN

Jan-16-20 06:20

Attachment E - Addl. CPM Detail for Boiler & Distribution System Work

Activity ID	Activity Name	Original Duration	Early Start	Early Finish
SCI Houtzdale GESA		235d	Apr-01-20 08:00	Feb-23-21 17:00
ADMINISTRATIVE		227d	Apr-01-20 08:00	Feb-11-21 17:00
A1010	LETTER OF INTENT	0d	Apr-01-20 08:00	
A1020	SITE NOTICE TO PROCEED	0d	Apr-01-20 08:00	
A1030	COMPLETE CNG ECM	0d		Sep-30-20 17:00
A1040	COMPLETE ABOVE GROUND HOT WA	0d		Oct-15-20 17:00
A1090	COMPLETE ABOVE GROUND CHILLED	0d		Feb-11-21 17:00
DESIGN SERVICES		60d	Apr-01-20 08:00	Jun-23-20 17:00
DS1000	FIANL DESIGN	5d	Apr-01-20 08:00	Apr-07-20 17:00
DS1010	STRUCTURAL VALIDATION OF ROOF	5d	Apr-01-20 08:00	Apr-07-20 17:00
DS1020	CNG SYSTEM DESIGN	60d	Apr-01-20 08:00	Jun-23-20 17:00
PERMITING		5d	Apr-01-20 08:00	Apr-07-20 17:00
P1000	L&I APPROVAL	5d	Apr-01-20 08:00	Apr-07-20 17:00
APPROVALS		5d	Apr-01-20 08:00	Apr-07-20 17:00
APP1000	New Activity	5d	Apr-01-20 08:00	Apr-07-20 17:00
PROCURMENT		100d	Apr-01-20 08:00	Aug-18-20 17:00
PRO1000	FABRICATE & DELIVER STEEL SUPPOI	60d	Apr-01-20 08:00	Jun-23-20 17:00
PRO1010	FABRICATE & DELIVER HOT WATER B	65d	Apr-01-20 08:00	Jun-30-20 17:00
PRO1020	FABRICATE & DELIVER STEAM BOILEF	65d	Apr-01-20 08:00	Jun-30-20 17:00
PRO1030	FABRICATE & DELIVER CHIILLER 10-1	60d	Apr-01-20 08:00	Jun-23-20 17:00
PRO1040	FABRICATE & DELIVER PUMPS 4-6 wee	30d	Apr-01-20 08:00	May-12-20 17:00
PRO1060	PROCURE PIPE	15d	Apr-01-20 08:00	Apr-21-20 17:00
PRO1050	FABRICATE & DELIVER CNG SKID	40d	Jun-24-20 08:00	Aug-18-20 17:00
CONSTRUCTION		235d	Apr-01-20 08:00	Feb-23-21 17:00
CNG STATION		65d	Jun-24-20 08:00	Sep-22-20 17:00
CNG1000	CNG STATION SITEWORK	30d	Jun-24-20 08:00	Aug-04-20 17:00
CNG1010	CNG GAS PIPING	30d	Jun-24-20 08:00	Aug-04-20 17:00
CNG1020	INSTALL CNG SKID AND PIPING	20d	Aug-19-20 08:00	Sep-15-20 17:00
CNG1030	START-UP CNG SKID	5d	Sep-16-20 08:00	Sep-22-20 17:00
ABOVEGROUND DISTRIBUTION		235d	Apr-01-20 08:00	Feb-23-21 17:00
GROUND STRUCTURES		127d	Apr-01-20 08:00	Sep-24-20 17:00
SUPP1000	LAYOUT SITE/ INVESTIGATE	20d	Apr-01-20 08:00	Apr-28-20 17:00
SUPP1010	DRILLED FOUNDATIONS AND POUR	45d	Apr-22-20 08:00	Jun-23-20 17:00
SUPP1020	FRP BRIDGE AND ANCHOR FOUNDAT	20d	May-13-20 08:00	Jun-09-20 17:00
SUPP1030	ERECT STEEL SUPPORTS	80d	May-22-20 08:00	Sep-10-20 17:00
SUPP1050	ERECT BRIDGES	60d	Jun-19-20 08:00	Sep-10-20 17:00
SUPP1040	ERECT WALLSUPPORTS	10d	Sep-11-20 08:00	Sep-24-20 17:00
ROOF SUPPORTS		45d	Sep-11-20 08:00	Nov-12-20 17:00
RS1000	ROOF STEEL FRAMING BLDG 1	15d	Sep-11-20 08:00	Oct-01-20 17:00
RS1010	ROOF STEEL BLDG 2	15d	Oct-02-20 08:00	Oct-22-20 17:00

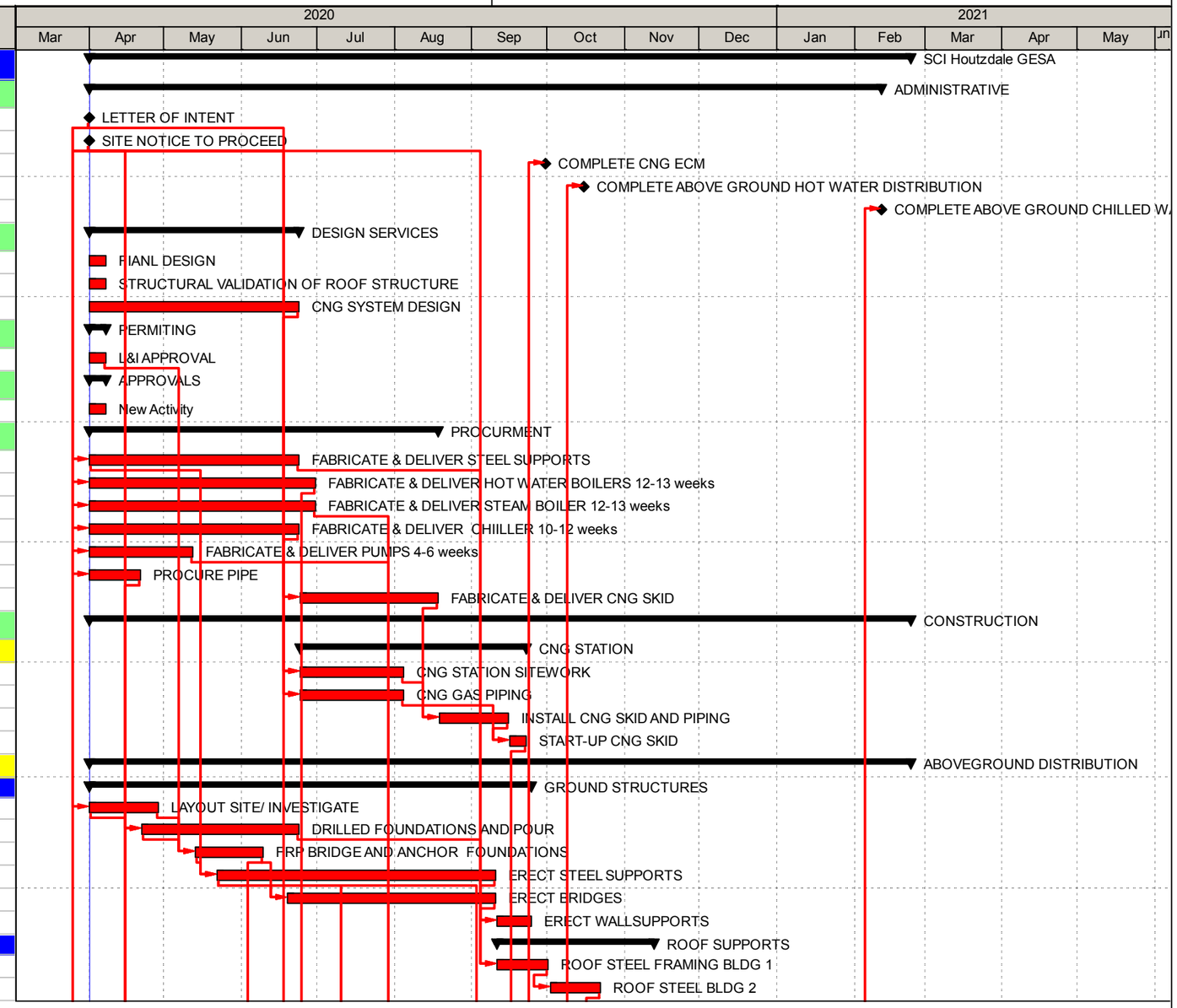

- Actual Work
- Remaining Work
- Critical Remaining Work
- Milestone
- Summary

TASK filter: All Activities

© Oracle Corporation

SNELICK CONSTRUCTION SERVICES, LLC

McCROSSIN

Activity ID	Activity Name	Original Duration	Early Start	Early Finish
RS1020	ROOF STEEL BLDG I&J	15d	Oct-23-20 08:00	Nov-12-20 17:00
RS1030	ROOF STEEL BLDG	15d	Oct-23-20 08:00	Nov-12-20 17:00
HOT WATER DISTRIBUTION		**220d**	**Apr-22-20 08:00**	**Feb-23-21 17:00**
HW1000	FABRICATE HOT WATER PIPING	103d	Apr-22-20 08:00	Sep-11-20 17:00
HW0500	INSTALL SYSTEM CONVERSION TAPS	6d	Apr-22-20 08:00	Apr-29-20 17:00
HW1010	INSTALL HOT WATER PIPING	158d	Jul-17-20 08:00	Feb-23-21 17:00
HW1020	INSULATED HOT WATER SYSTEM	5d	Oct-09-20 08:00	Oct-15-20 17:00
CHILLED WATER DISTRIBUTION		**212d**	**Apr-22-20 08:00**	**Feb-11-21 17:00**
CW1000	FABRICATE CHILLED WATER PIPING	95d	Apr-22-20 08:00	Sep-02-20 09:36
CW1010	INSTALLCHILLED WATER PIIPNG	150d	Jul-17-20 08:00	Feb-11-21 17:00
CW1020	INSULATE CHILLED WATER SYSTEM	5d	Oct-09-20 08:00	Oct-15-20 17:00
INTERIOR GAS DISTRIBUTION		**20d**	**Sep-02-20 09:36**	**Sep-30-20 09:36**
IG1000	FABRICATE GAS PIPING	5d	Sep-02-20 09:36	Sep-09-20 09:36
IG1010	INSTALL GAS PIPNG	15d	Sep-09-20 09:36	Sep-30-20 09:36
UNDERGROUND DISTRIBUTION		**25d**	**Jun-10-20 08:00**	**Jul-14-20 17:00**
UG1000	FENCE BORING	20d	Jun-10-20 08:00	Jul-07-20 17:00
UG1010	UNDERGROUND DISTRIBUTION	5d	Jul-08-20 08:00	Jul-14-20 17:00
CENTRAL, PLANT		**227d**	**Apr-01-20 08:00**	**Feb-11-21 17:00**
CENTRAL PLANT DEMOLITION		**25d**	**Apr-01-20 08:00**	**May-05-20 17:00**
CP DEMO1000	DEMO COAL FIRED BOILERS	25d	Apr-01-20 08:00	May-05-20 17:00
CNG CONVERSION		**6d**	**Sep-23-20 08:00**	**Sep-30-20 17:00**
CP CNG1000	CONVERT STEAM BOILERS	3d	Sep-23-20 08:00	Sep-25-20 17:00
CP CNG1010	CONVERT HOT WATER BOILER	3d	Sep-28-20 08:00	Sep-30-20 17:00
STEAM		**40d**	**Jul-01-20 08:00**	**Aug-25-20 17:00**
CPS1000	INSTALL HOT WATER BOILERS	25d	Jul-01-20 08:00	Aug-04-20 17:00
CPS1010	INSTALLSTEAM BOILER	15d	Aug-05-20 08:00	Aug-25-20 17:00
CHILLED WATER		**167d**	**Jun-24-20 08:00**	**Feb-11-21 17:00**
A1000	REPLACE CHILLERS	5d	Jun-24-20 08:00	Jun-30-20 17:00
A1060	CHILLED WATER PIPING	24d	Jul-01-20 08:00	Aug-03-20 16:00
A1070	START CHILLED WATER SYSTEM	0d		Feb-11-21 17:00
HOT WATER		**117d**	**May-06-20 08:00**	**Oct-15-20 17:00**
A0120	INSTALL NEW HW DISTRIBUTION PUM	15d	May-06-20 08:00	May-26-20 17:00
A0100	UP SIZE HW FEED EXISTING CONNEC	12d	May-27-20 08:00	Jun-11-20 17:00
A0110	INSTALL HW FEED WAREHOUSE BLDG	8d	Jun-12-20 08:00	Jun-23-20 17:00
A1050	HOT WATER PIPING REVISIONS CENT	30d	Aug-05-20 08:00	Sep-15-20 17:00
A1080	START HOT WATER SYSTEM	0d		Oct-15-20 17:00

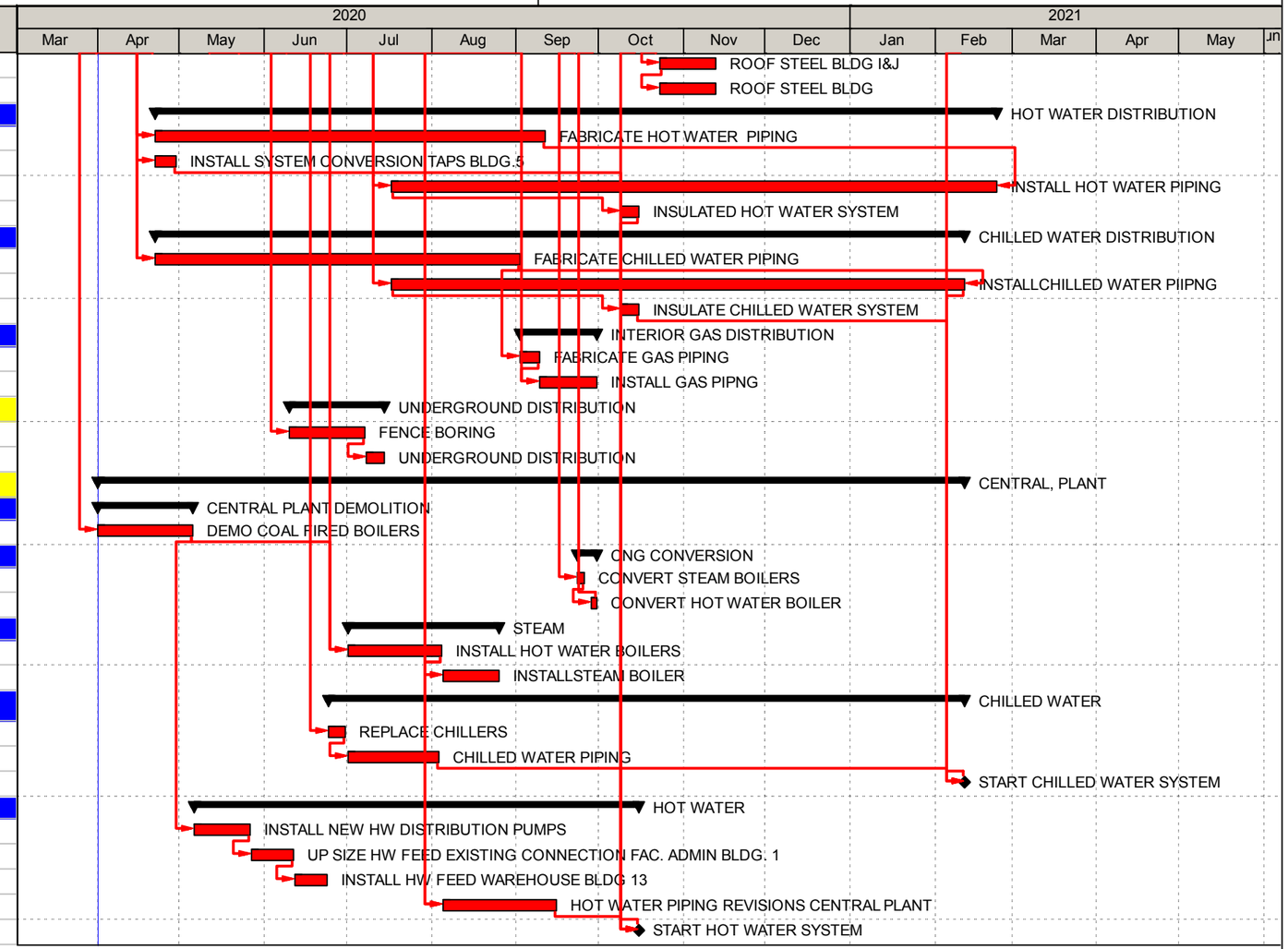

Actual Work
Remaining Work
Critical Remaining Work
Milestone
Summary

TASK filter: All Activities

© Oracle Corporation

EXHIBIT 1
Scope of Work by ECM
Including
Small Diverse Business Participation

Project Scope

Listed in the table below are the Base Project Energy Conservation Measures (ECMs) as well as additional ECMs which DOC can fund from additional Energy Related Cost Savings or from owner controlled contingency funds. The Efficiency Network (TEN) will engineer and install the ECMs. There will be a three (3) year measurement and verification period from the end of the project to confirm the projected savings.

ECM 1 **LED Lighting:** This ECM will retrofit or install new luminaires with LED lamps in over 6,600 fixtures throughout the complex. Scope to include optional LED flatpanel fixture replacements for 1,030 linear lay-in applications instead of retrofits.

ECM 2 **Lighting Controls:**.TEN shall install occupancy sensors in select areas that can take advantage of controls without compromising security. These areas tend to be offices, conference rooms, or other larger rooms with intermittent occupancy patterns.

ECM 3.1 **Compressed Natural Gas (CNG) Conversion:** This measure calls for the conversion of the thermal plant form coal and oil to predominately natural gas. The work shall include a truck unloading facility for the CNG fuel, necessary piping, electrical and structures to supply CNG to the Central Plant as well as for replacing propane fuel within the main complex.

ECM 3.2 **Steam Plant Upgrades Using Kewanee Boiler:** This ECM shall re-utilize the existing 500 HP Kewanee steam boiler and install a new 350 HP firetube boiler to serve the remaining steam loads within the complex (laundry and kitchen).

ECM 3.3 **Hot Water Plant Upgrades:** This work will include creating a dedicated hot water plant in the Central Plant and converting the pumping system to a primary, variable flow system. The existing 800 HP Cleaver Brooks boiler will be converted to hot water use and two new 350 HP firetube hot water boilers installed approximately where the coal boilers reside.

ECM 4.1 **New Hot Water Distribution:** This ECM will replace all buried hot water piping both inside and outside the fence. The majority of the new piping to the buildings will be placed on stanchions for easy access and detection of failures. Select piping will be installed on the roofs to the associated mechanical rooms.

ECM 4.2 **Chilled Water Distribution Replacement:** This ECM will replace all buried chilled water piping both inside and outside the fence. The majority of the new piping to the buildings will be placed on stanchions for easy access and detection of failures. Select piping will be installed on the roofs to the associated mechanical rooms.

ECM 5 Water Conservation: Inmate cell areas will be retrofitted with I-CON electronic plumbing controls. The new controls will be installed on 1,120 flush valves, 352 lavatory valves and 266 shower valves.

ECM 6 Central Chilled Water Plant Upgrades: This measure will replace all chillers and pumps with new efficient chillers and pumping designed for variable, primary flow operation. New 410 ton electric chillers will be equipped with variable speed drives.

ECM 6a New Cooling Towers: TEN will remove existing BAC cooling towers and replace them with similar tonnage towers, utilizing existing tower supports. New tower fans will be equipped with variable frequency drives.

ECM 7 Building Automation System: New controls will be installed to serve the new central plant equipment (ECMs 3.2, 3.3, 6 and 6a). Second, the existing DX controllers and fiber-optic cable will be replaced and a new BACnet infrastructure will be extended to individual buildings. Last, sequence and operation modification will be implemented, and new variable frequency drives will be installed to generate additional energy savings.

TEN
THE EFFICIENCY NETWORK

SMALL DIVERSE BUSINESS SUBMISSION FORM

Submit 2 originals in a sealed envelope separate from the Technical Submission and the ECM/Cost

Project Description:	Request for Quotes for a Guaranteed Energy Savings Project at SCI Houtzdale, Clearfield County, PA
RFQ#:	Project No. GESA 2018-1
Solicitation Due Date:	November 20, 2018 – 2:00 p.m.
Offeror Company's Name:	The Efficiency Network (TEN)
Offeror Contact	
Name:	David Robb, Vice President Business Development
Email:	david.robb@tensaves.com
Phone:	412-722-9845

OFFEROR INFORMATION:

Is your firm a DGS-Verified Small Diverse Business? ☐Yes ☒ No (MUST check one)

Is your firm a DGS-Self-Certified Small Business? ☒ Yes ☐ No (MUST check one) ← **Note - Yes Answer**

PERCENTAGE COMMITMENT INFORMATION:

Percentage Commitments for SDB and SB Subcontracting, Manufacturing, Stocking Supplier, and Non-Stocking Supplier Participation

After examination of the contract documents, which are made a part hereof as if fully set forth herein, the Offeror commits to each of the following independent percentages of the total Core ECM costs for Small Diverse Business and Small Business participation.

Small Diverse Business percentage commitment: (Do not include any commitments made to subcontractors, manufacturers, stocking suppliers, and/or non-stocking suppliers that only qualify as Small Businesses.)

__65.0__ % __Sixty-Fve__ Percent
(Figure) (Written)

Small Business percentage commitment: (Do not include any commitments made to Subcontractors, manufacturers, stocking suppliers, and/or non-stocking suppliers that only qualify as Small Diverse Businesses.)

__100__ % __One Hundred__ Percent
(Figure)

We have inserted 100% as per page 40 of the RFQ, Section 3.3C(3)a(1) "If the offeror is a SB, 100% of the contract cost is allocated to SB participation."

DGS Project No. GESA 2018-1 November 20, 2018
SCI Houtzdale – Vol III. SDB and SB Participation Submission Page 1

EXHIBIT 2

ASSURED PERFORMANCE GUARANTEE
For
GESA CONTRACT

PART 1

1-1. DEFINITIONS

For purposes of this Agreement, the following terms have the meanings set forth below:

Annual Project Benefits are the portion of the projected Total Project Benefits to be achieved in any one year of the
Guarantee Term.

Annual Project Benefits Realized are the Project Benefits actually realized for any one year of the Guarantee Term.

Annual Project Benefits Shortfall is the amount by which the Annual Project Benefits exceed the Annual Project Benefits Realized in any one year of the Guarantee Term.

Annual Project Benefits Surplus is the amount by which the Annual Project Benefits Realized exceed the Annual Project Benefits in any one year of the Guarantee Term.

Baseline is the mutually agreed upon data and/or usage amounts that reflect conditions prior to the installation of the
Energy Conservation Measures.

Guarantee Term will commence on the first day of the month following the Final Payment date and will continue through the duration of the M&V Services.

Installation Period is the period beginning on the effective date of the GESA Contract and ending on the commencement of the Guarantee Term.

Measured Project Benefits are the utility savings and cost avoidance calculated in accordance with the methodologies set forth in Part 2 of this Agreement.

Project Benefits are the Measured Project Benefits to be achieved for a particular period during the term of this Agreement.

O&M Benefits are the operations and maintenance cost avoidance savings as stipulated in Part 2 of this Agreement.

Rebate Project Benefits are the energy rebate or incentive non-recurring savings as stipulated in Part 2 of this Agreement.

Total Project Benefits are the projected Project Benefits to be achieved during the entire term of this Agreement.

1-2. SCOPE

A. The Funding Agency is contracting for a full range of energy services and energy-related capital improvements at no initial capital cost for the Project. The ECMs may include but are not limited to: the design, acquisition, installation, modification, maintenance and training of funding agency personnel in the operation of existing and new equipment. The ECMs will reduce energy consumption and related costs associated with the heating, ventilation and air conditioning system, lighting systems, control systems, building envelope, the hot water systems, water consumption, sewage costs and other energy using devices. Additionally, savings which will not reduce consumption but are aimed at cost savings, such as fuel switching, demand side management, on-site generation, utility bill auditing, utility rate changes, and distribution upgrades etc. have been considered. ECMs may also include the training of facility staff with respect to routine maintenance and operation of all improvements. ECMs must result in a guaranteed minimum energy savings with payments linked to actual documented energy and cost reductions.

B. Any stipulated energy and/or operational cost savings that are attributed to this project have been rigorously reviewed and the GESA Contractor is required by this contract to thoroughly document and verify the savings, which have been approved by DGS and the Funding Agency. The Annual Project Benefits Realized by the ECMs in any year must be guaranteed to equal or exceed the Annual Project Benefits during that year for the duration of the contract. The GESA Contractor is required to guarantee energy and cost savings on an annual basis. No credit for the achievement of savings above and beyond the annual guarantee will be credited to satisfy performance guarantees in future years of the contract. Annual reconciliation of the achieved savings will be required.

1-3. MEASUREMENT & VERIFICATION

A. Measurement & Verification (M&V) services shall commence on the first day of the month following the month in which the Funding Agency releases the Final Payment to the GESA Contractor and shall continue throughout the Assured Performance Guarantee Term, subject to earlier termination of the Assured Performance Guarantee as provided herein. The GESA Contractor shall ensure that an approved representative from the Funding Agency is physically present for all pre-retrofit and post-retrofit measurements for each ECM as applicable to the Energy Savings Guarantee unless the Funding Agency waives their right to be present. The final completion date shall be the date when all Work is completed, including all punch list items, as evidenced by the release of the Final Payment by the Funding Agency. In the event the Funding Agency (i) cancels or terminates receipt of M&V Services, (ii) fails to fulfill any of Funding Agency responsibilities necessary to enable GESA Contractor to complete the Work and provide the M&V Services, or (iii) otherwise cancels, terminates or materially breaches this Agreement, GESA Contractor shall issue a written notice to the Funding Agency stating the nature of the alleged breach, the date upon which it arose, and the remedy sought. GESA Contractor shall provide the Funding Agency with a thirty (30) day period to cure such breach. In the event of a dispute, all parties shall act in good faith to mitigate damages with a reservation of rights as to damages.

B. If the GESA Contractor is delayed in the commencement, performance, or completion of the M&V Services by causes beyond its control and without its fault, including but not limited to inability to access property; concealed or unknown conditions encountered at the project, differing from the conditions represented by Funding Agency in the quote documents or

otherwise disclosed by Funding Agency to the GESA Contractor; a Force Majeure condition; failure by Funding Agency to perform its obligations under this GESA Contract; or failure by Funding Agency to reasonably cooperate with GESA Contractor in the timely completion of the M&V Work where such failure is material, substantial and inconsistent with the terms of this GESA Contract, GESA Contractor shall provide written notice to Funding Agency of the existence, extent of, and reason for such delays and impacts. Under such circumstances, an equitable adjustment in the time for performance and the Assured Performance Guarantee shall be made, subject to the mutual written agreement of the parties.

C. Funding Agency shall provide GESA Contractor, its subcontractors, and its agents reasonable and safe access to all facilities and properties in Funding Agency's control that are subject to the M&V Services. Work to be performed by GESA Contractor in accordance with this GESA Contract shall be performed during normally scheduled staff shifts and as agreed to by both parties. Funding Agency further agrees to assist GESA Contractor, its subcontractors, and its agents to gain access to facilities and properties that are not controlled by Funding Agency but are necessary for GESA Contractor to provide the M&V Services. An equitable adjustment in the time for performance and Assured Performance Guarantee shall be made as a result of any failure to grant such access, subject to the mutual written agreement of the parties.

D. In order for GESA Contractor to perform its obligations under this Agreement with respect to the Work, the Assured Performance Guarantee, and the M&V Services, Funding Agency shall be responsible for:

1. Providing GESA Contractor, its subcontractors, and its agents reasonable and safe access to all facilities and properties that are subject to the Work and/or M&V Services;

2. Properly maintaining, and performing appropriate preventative maintenance on, all equipment and building systems affecting the Assured Performance Guarantee in accordance with manufacturers' standards and specifications;

3. Providing the utility bills, reports, and similar information reasonably necessary for administering GESA Contractor's obligations under the Assured Performance Guarantee within thirty (30) days of Funding Agency receipt and/or generation or GESA Contractor's request therefore;

4. Providing all records relating to energy and/or water usage and related maintenance of the premises and relevant equipment requested by GESA Contractor; and

5. Promptly notifying GESA Contractor of any change in use or condition or any other matter that may impact the Assured Performance Guarantee.

2-1. PROJECT BENEFITS SUMMARY

A. Subject to the terms and conditions of this GESA Contract, GESA Contractor and Funding Agency agree that, upon Final Completion, Funding Agency will be deemed to achieve a total of $5,856,193 in annual increments as shown in the Operation & Maintenance Savings column and $11,304,997 in annual increments as shown in the Energy Related Cost Savings column of the Total Project Benefits table below. GESA Contractor guarantees that Funding Agency will achieve a total of $24,614,350 in Total Annual Energy Savings during the term of this Assured Performance Guarantee, for Total Project Benefits of $41,796,969 as set forth in the Total Project Benefits table below.

Table A. Total Project Benefits

Year	Guaranteed Energy Cost Savings	Operations & Maintenance Cost Savings[1]	Energy Related Cost Savings[2]	Total Guaranteed Savings[3]
0	$ 404,839	$ 142,798	$ -	$ 547,637
1	$ 1,014,637	$ 275,568	$ 595,000	$ 1,885,205
2	$ 1,182,522	$ 278,324	$ 595,000	$ 2,055,846
3	$ 1,194,347	$ 281,107	$ 595,000	$ 2,070,455
4	$ 1,206,291	$ 283,918	$ 595,000	$ 2,085,209
5	$ 1,218,354	$ 286,757	$ 595,000	$ 2,100,111
6	$ 1,230,537	$ 289,625	$ 595,000	$ 2,115,162
7	$ 1,242,843	$ 292,521	$ 595,000	$ 2,130,364
8	$ 1,255,271	$ 295,447	$ 595,000	$ 2,145,718
9	$ 1,267,824	$ 298,401	$ 595,000	$ 2,161,225
10	$ 1,280,502	$ 301,385	$ 595,000	$ 2,176,887
11	$ 1,293,307	$ 304,399	$ 595,000	$ 2,192,706
12	$ 1,306,240	$ 307,443	$ 595,000	$ 2,208,683
13	$ 1,319,303	$ 310,517	$ 595,000	$ 2,224,820
14	$ 1,332,496	$ 313,622	$ 595,000	$ 2,241,118
15	$ 1,345,821	$ 316,759	$ 595,000	$ 2,257,579
16	$ 1,359,279	$ 319,926	$ 595,000	$ 2,274,205
17	$ 1,372,872	$ 323,126	$ 595,000	$ 2,290,997
18	$ 1,386,600	$ 326,357	$ 595,000	$ 2,307,957
19	$ 1,400,466	$ 329,620	$ 595,000	$ 2,325,086
Total	$ 24,614,350	$ 5,877,621	$ 11,304,997	$ 41,796,969

The energy cost savings provided in **Table A** above are based on the annual escalation stated in **Table A-1** below and will be applied to the unit utility rates listed in **Table B** beginning the first month following the baseline period, escalating annually throughout the Guarantee Period.

Table A-1 – Annual Escalation Rates

Energy Cost Esc./yr	**1.0%**
Labor Cost Esc./yr	**1.0%**
Maintenance Cost Esc	**1.0%**

The actual escalation of calculated savings that will be applied in the M&V Report will be escalated such that results in the highest dollar savings of:

(1) **Table A-1** above
(2) CPI (Consumer Price Index) for the geographical region, or
(3) Actual fuel rate

B. Within thirty (30) days of the commencement of the Guarantee Term, GESA Contractor will calculate the Measured Project Benefits achieved during the Installation Period and provide the Funding Agency of written confirmation of the calculations.

C. Within thirty (30) days of each anniversary of the commencement of the Guarantee Term, GESA Contractor will calculate the Measured Project Benefits achieved for the applicable year applicable to such period and provide both DGS and the Funding Agency with an annual report containing:

1. an executive overview of the project's performance and Project Benefits achieved to date; and
2. summary analysis of the Measured Project Benefits accounting; and
3. a detailed analysis of the Measured Project Benefits calculations.

D. Funding Agency acknowledges and agrees that if, for any reason, it (i) cancels or terminates receipt of M&V Services, (ii) fails to pay for M&V Services, (iii) fails to fulfill any of its responsibilities necessary to enable GESA Contractor to complete the Work and provide the M&V Services, or (iv) otherwise cancels, terminates or materially breaches this GESA Contract, the Assured Performance Guarantee shall automatically terminate and GESA Contractor shall have no liability hereunder.

2-2. PROJECT SAVINGS SHORTFALLS OR SURPLUSES

A. Guaranteed Savings Shortfalls: If an Annual Project Benefit Shortfall occurs for any year of the Assured Performance Guarantee Term, GESA Contractor shall, at the sole discretion of the Funding Agency, perform one or more of the following:

1. pay to Funding Agency the amount of such shortfall, or
2. subject to Funding Agency's written approval, provide to Funding Agency additional products or services, in the value of such shortfall, at no additional cost to Funding Agency.

B. Guaranteed Savings Surpluses: If an Annual Project Benefit Surplus occurs for any year of the Guarantee Term, GESA Contractor may not apply the amount of such surplus to set off any subsequent Annual Project Benefit Shortfall during the Guarantee Term.

C. Additional Energy Conservations. Where an Annual Project Benefits Shortfall has occurred, GESA Contractor may, subject to Funding Agency approval, implement additional Energy Conservation Measures, at no cost to Funding Agency, which may generate additional Project

Benefits in future years of the Guarantee Term. Such improvements do not relieve the GESA Contractor from liability set forth in Paragraph 2-2(A).

D. Event of Default by GESA Contractor: If an Annual Project Benefits Shortfall has occurred and the GESA Contractor does not comply with Paragraph 2-2(A), the Funding Agency may deem this to be an Event of Default. If default occurs, the Funding Agency may place the GESA Contractor in the Contractor Responsibility Program and also pursue debarment or suspension in accordance with the Commonwealth Procurement Code.

PART 3

MEASUREMENT AND VERIFICATION METHODOLOGY

3-1. MEASUREMENT & VERIFICATION PROTOCOL

A. GESA Contractor shall apply Option C verification methodologies, as more fully detailed in the guidelines and standards of the International Measurement and Verification Protocol (IPMVP) and/or the Federal Energy Management Program (FEMP), or modified variations as outlined below, in connection with the provision of M&V Services hereunder. The applicable option shall be as set forth in the Project-Specific Request for Quote submitted to and accepted by DGS and the Funding Agency.

B. Option C: Whole Facility
Savings are determined by measuring energy use at the whole facility level using utility metered data and utility billing. The baselines for this project are as follows:

ECM #	Energy Conservation Measure Description	Annual kWh Savings	Annual Nat Gas (MCF)	Annual Wtr/Swr (kGal) Savings	Annual Coal /Oil Savings (MMBTU)	Annual LPG Savings (MMBTU)
1	Lighting (Base + ~400 New Fixtures)	1,463,739	-300			
1.1	Lighting ADD (1030 New Panels vs Troffer Retro.)	24,943				
1.2	Lighting (DOC Implemented Savings-Ext + 32/28W)	275,915				
2	Lighting Controls	4,019				
3.1	CNG Conversion (incl. site work, lines, Bldg K & Kit)	304,965	-90,483		88,287	2,197
3.2	New Steam in Plant - Kewanee (+ 1-350 hp Blr)	177,141	4,322			
3.3	New HW Plant (Conv. 800 hp CB; 2 new 350 hp Blrs)	755,180	11,113			
4.1	New HW distribution piping		2,417			
4.2	New CHW distribution piping					
5	Water Conservation - Base w/o non-inmate areas		5,432	35,832		
5b	Domestic Water Housing Unit PRV Replacements					
6	Central Chilled Water Plant Upgrades	889,537				
6a	Cooling Towers Replacement (S/S basin)	50,000				
7	Building Automation System (BAS) Upgrade	347,912	5,138			
	Totals	**4,293,351**	**-62,362**	**35,832**	**88,287**	**2,197**

C. The baselines for this project are as follows:

Electric Baselines

Month	Usage kWh	Demand kW	Cooling Degree Days
January	943,922	1,910	0
February	915,360	1,910	0
March	950,781	1,528	0
April	815,851	1,503	4
May	831,253	1,701	81
June	993,767	1,935	94
July	1,016,389	1,121	184
August	999,491	1,898	229

September	1,025,646	1,866	138
October	813,986	1,793	34
November	868,932	1,366	0
December	849,915	1,423	0
Total	**11,025,293**	**19,954**	**764**

The electric baselines were chosen from the 2018 calendar year's electric utility information supplied by the PSFEI Utility Usage reports. The cooling degree days are taken from the Weather Data Depot website using weather station PA6616 and a 65°F balance point. This electric baseline information is graphed below to show the correlation to weather patterns during the 2018 calendar year.

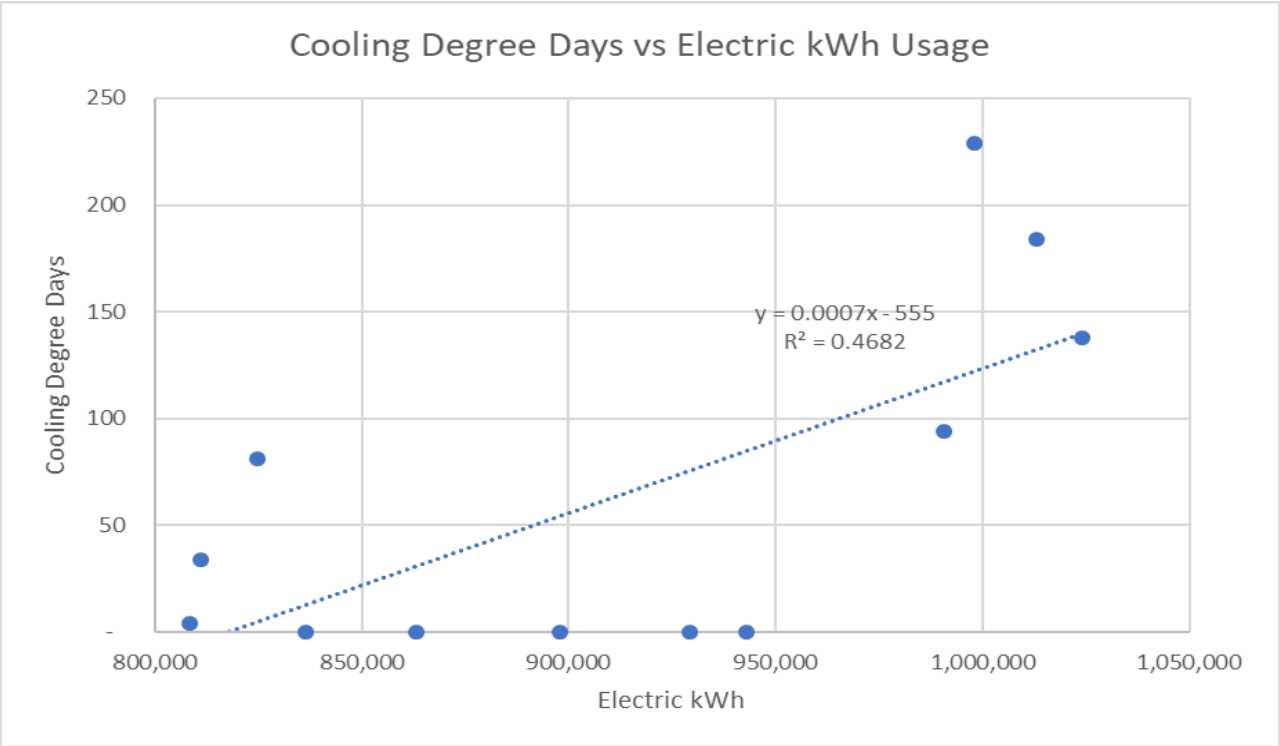

Coal and Fuel Oil Baselines

Month	Coal Tons	#2 Fuel Oil Gallons	MMBtu	Heating Degree Days
January	324	27,687	12,289	1121
February	288	16,544	9,798	710
March	309	16,008	10,269	831
April	37	53,857	8,480	529
May	0	40,867	5,705	25
June	0	37,065	5,174	6
July	0	37,659	5,257	0
August	0	35,883	5,009	0
September	0	35,667	4,979	33
October	0	43,794	6,114	319
November	0	59,673	8,330	743
December	0	63,024	8,798	834
Total	**958**	**467,728**	**90,203**	**5,151**

The coal and fuel oil baselines were chosen from the 2018 calendar year's utility information supplied by the PSFEI Utility Usage reports. The baselines are usage for the boiler systems only and do not include the fuel oil used by the emergency generators. TEN assumes that going forward the emergency generators will continue to be run as they were in 2018. The Btu content of the bituminous coal is assumed to be 26,000,000 Btus per ton. The Btu content of the #2 fuel oil is assumed to be 139,600 Btus per gallon. The heating degree days are taken from the Weather Data Depot website using weather station PA6616 and a 60°F balance point. This coal and fuel oil baseline information is graphed below to show the correlation to weather patterns during the 2018 calendar year.

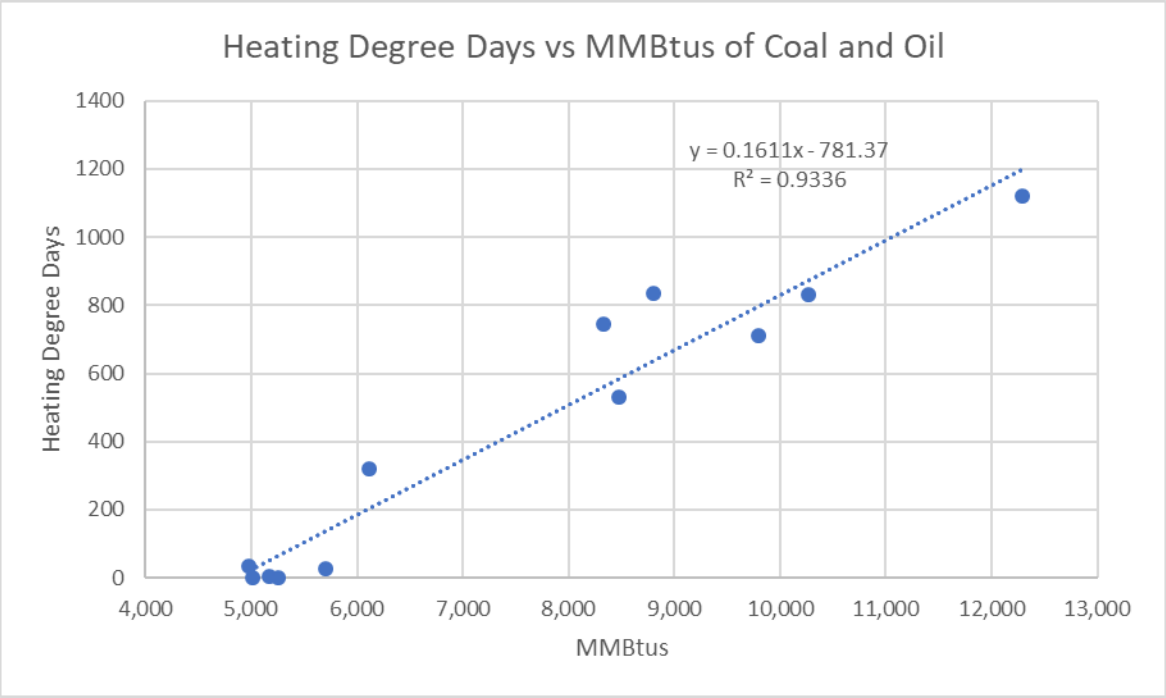

Propane Baseline

Month	Usage Gallons	Converted MCuFt
January	4,799	429
February	2,595	232
March	3,199	286
April	3,747	335
May	2,796	250
June	1,801	161
July	2,002	179
August	2,002	179
September	2,204	197
October	1,096	98
November	3,602	322
December	2,405	215
Total	**32,248**	**2,883**

The propane baselines were chosen from the 2018 calendar year's utility information supplied by the PSFEI Utility Usage reports. The usage is reported in MCuFt using a conversion rate of 0.0894 MCuFt per gallon,

but the propane is purchased in gallons from the supplier. Post-construction this utility will be removed from use at SCI Houtzdale and be replaced by natural gas as the fuel source for the kitchen and heating Building K.

Water Baseline

Month	Usage Gallons into the Tank
January	9,496,000
February	9,052,843
March	9,983,530
April	9,631,293
May	9,820,333
June	10,050,000
July	10,366,667
August	10,419,000
September	10,116,000
October	9,780,667
November	9,393,333
December	9,844,000
Total	117,953,667

The water usage baseline was chosen from the average of the 2016-2018 calendar year's utility information supplied by the PSFEI Utility Usage reports. This usage is reported as the water flowing into the storage tank.

3-2. CHANGES IN USE OR CONDITION

A. Funding Agency agrees to notify GESA Contractor within thirty (30) days of (i) any actual or intended change, whether before or during the Guarantee Term, in the use of any facility, equipment, or Energy Conservation Measure to which this schedule applies; (ii) any proposed or actual expansions or additions to the premises or any building or facility at the premises; (iii) a change to utility services to all or any portion of the premises; or (iv) any other change or condition arising before or during the Guarantee Term that reasonably could be expected to change the amount of Project Savings realized under this Agreement.

1. Such a change, expansion, addition, or condition would include, but is not limited to: (a) changes in the primary use of any facility, Energy Conservation Measure, or portion of the premises; (b) changes to the hours of operation of any facility or portion of the premises; (c) changes or modifications to the Energy Conservation Measures or any related equipment; (d) changes to the M&V Services provided under this GESA Contract; (e) insufficient or improper maintenance or unsound usage of the Energy Conservation Measures or any related equipment at any facility or portion of the premises (other than by GESA Contractor); or (f) additions or deletions of Energy Conservation Measures or any related equipment at any facility or portion of the premises.

B. If GESA Contractor independently learns of any such change or condition, GESA Contractor shall calculate and send to Funding Agency a Notice of adjustment to the Annual Project Benefits to reflect the impact of such change or condition, and the adjustment shall become effective as of

the date the change or condition first arose. If the Funding Agency fails to promptly provide GESA Contractor with notice of any such change or condition, GESA Contractor may make reasonable estimates as to the impact of such change or condition and as to the date on which such change or condition first arose in calculating the impact of such change or condition, and such estimates shall be conclusive.

BASELINE CALCULATIONS AND UTILITY RATES

4-1. UTILITY COSTS FOR BASELINE

A. The unit utility costs for the Baseline period are set forth below as "Base Utility Cost" and shall be used for all calculations. The Base Utility Cost shall be escalated annually by escalation rate of one percent (1%). Escalated Base Energy Rates or Actual Utility Rates will be used during the M&V period, whichever results in the highest dollar savings for SCI Houtzdale.

B. Baseline utility rates used for the energy savings calculations were determined according to the following methods:

a. The electric rate used to calculate ECM savings is $0.0753/kWh which is derived from the average rate of the 2018 calendar year ($0.0739/kWh), with an annual escalation of 1% each year until the estimated project completion of 2021 Steam Rates: Average annual consumption rate for 2018.

b. TEN is proposing a fuel conversion to compressed natural gas, the coal and fuel oil usage has been converted to MMBtu in order to compare it to the natural gas MMBtu usage post-construction. Therefore, TEN has calculated an overall $/MMBtu rate inclusive of both fuels. The fuel oil usage used in calculating the MMBtu rate is the total oil consumed at the site which includes the oil consumed by the emergency generators. This overall rate used to calculate ECM savings is $12.83/MMBtu derived from an average rate in 2018 of $12.49/MMBtu with a 1% annual escalation rate each year until the estimated project completion of 2021.

c. The propane rate used to calculate ECM savings is $13.70/MCuFt, derived from an average rate in 2018 of $10.62/MCuFt with a 1% annual escalation rate each year until the estimated project completion of 2021Sewer Rates: Published tariff rate for 2018.

d. SCI Houtzdale is billed for water usage through the Houtzdale Municipal Authority, account #1 1HOUTZDAL and billed for sewer charges by the Woodward Township Sewage and Water Authority, account #2184-TP. Because of the sewage treatment facility's contract with SCI Houtzdale, their charges are heavily weighed by capital project reimbursement to the treatment facility and do not have a high enough $/gallon rate to be considered for ECM savings calculations. Therefore, TEN has not calculated any sewage charge savings in this project. Per the water supply contract, due for renewal in October 2028, SCI Houtzdale is not charged a consistent per gallon rate for their water usage. TEN has modeled the water supply contract for the 2016, 2017, and 2018 calendar years to calculate an effective rate per thousand gallon which includes O&M costs as well as a minimum flow rate from the water supply plant. The effective water rate used to determine ECM savings is $7.26/kGal derived from the average of the three-year period with a 1% annual escalation rate each year until the estimated project completion of 2021.

e. The compressed natural gas rate is estimated based on the rate given to TEN by PSFEI. The assumption is that PA DOC will solicit a compressed natural gas supplier prior to construction completion.

The following table outlines the Base Utility Costs which were used to calculate the savings shown in Year 1 of the Guaranteed Savings:

Table B – Base Utility Costs

Utility	Cost	Units
Electric	$0.0753	$/kWh
Coal and Fuel Oil	$12.828	$/MMBtu
Propane	$13.697	$/MCuFt
Water	$7.264	$/kGallon
Compressed Natural Gas	$9.217	$/MCF

PART 5

PRIMARY OPERATIONS SCHEDULE PRE & POST RETROFIT

5-1. PRE/POST RETROFIT – Standards of Control

HVAC Parameters – Scheduled Zones

SCI Houtzdale			
Typical Occupied Schedule for Housing Units	All Housing units operate 24 hours per day 7 days per week this includes Housing Units A to K and AHUs AHU-1 to AHU-25 and the 10 RTUs serving I &J. Housing Unit K is conditioned by 15 Bard Units		
AHU-26, 27, 32,33 and HV-2	units operate 24 hours per day 7 days per week		24/7
Zone Schedules	Day		Time
AHU-28, 29,30, and HV-1 Inmate/Staff Dining & Laundry	Sunday to Saturday		4:00 am to midnight
AHU-34,35,36 and AHU-37 Learning Services	Sunday to Saturday		6:00 am to midnight
HV-3, HV-4 and HV-5 Correction Industries	Sunday to Saturday		6:00 am to midnight
		Set Points	
Equipment		Occupied	Unoccupied
Air Handling Units / Roof Top Units			
Heating season	Nov - Apr	72F	67F
Cooling season	May-Oct	72F	78F
Heating and Ventilating Units			
Heating season	Nov-Apr	72F	67F
Cooling season	May-Oct	72F	78F
Overrides are standard procedure set by facility personnel as needed.			

PART 6

6.1 MEASUREMENT & VERIFICATION SERVICES

COMMONWEALTH REPRESENTATIVE

A. **GESA Contractor shall ensure that an approved representative from Funding Agency is physically present for all pre-retrofit and post retrofit measurements, for each ECM as applicable to the Energy Savings Guarantee. Funding Agency and GESA Contractor shall mutually witness and record said measurements and sign GESA Contractor's measurement logbook, if deemed mutually acceptable. GESA Contractor shall include all logged measurements in the annual report to be provided.**

6-2. M&V SERVICES

A. GESA Contractor will, for a period of 3 Guarantee Years (the "Reporting Period") unless earlier terminated by Funding Agency, provide the "M&V Services" set forth below in connection with the Assured Performance Guarantee. Funding Agency shall pay GESA Contractor an annual fee during the Reporting Period for such M&V Services as identified in the table below. Notwithstanding anything to the contrary, Funding Agency may choose to continue the M&V services in Guarantee Year Four (4) and beyond by notifying GESA Contractor within thirty (30) days of the end of the third Guarantee Year. If Funding Agency, after GESA Contractor's completion of the third year of M&V Services, does not continue with the M&V Services, it irrevocably acknowledges GESA Contractor's full satisfaction of, and release from, this Assured Performance Guaranty.

1. During the Installation Period, the GESA Contractor's Performance Assurance Engineer will track Measured Project Benefits. The GESA Contractor will report the Measured Project Benefits achieved during the Installation Period to the Funding Agency within 90 days of the commencement of the Guarantee Term.

2. Within 90 days of each anniversary of the commencement of the Guarantee Term, for a period of 3 years, GESA Contractor will provide the Funding Agency with an annual report containing:
   A. an executive overview of the project's performance and Project Benefits achieved to date;
   B. a summary analysis of the Measured Project Benefits accounting; and
   C. depending on the M&V Option, a detailed analysis of the Measured Project Benefits calculations.

3. During the Guarantee Term, for a period of 3 years, the GESA Contractor's Performance Assurance Engineer will monitor the on-going performance of the ECMs, as specified in this GESA Contract, to determine whether anticipated Measured Project Benefits are being achieved. In this regard, the Performance Assurance Engineer will periodically assist the Funding Agency, on-site or remotely, with respect to the following activities:

   A. Conduct one annual on-site visit to verify proper operation of the equipment installed under the project.

B. review information furnished by the Funding Agency from the facility management system to confirm that control strategies are in place and functioning;
C. advise Funding Agency's designated personnel of any performance deficiencies based on such information;
D. coordinate with Funding Agency's designated personnel to address any performance deficiencies that affect the realization of Measured Project Benefits; and
E. inform Funding Agency of opportunities to further enhance project performance and of opportunities for the implementation of additional ECMs.

6-3. COST OF M&V SERVICES

Based on direction from the Commonwealth, the fees for the first three (3) years of annual M&V service has been included in the Project; refer to the project cash flow in the Investment Grade Audit. The amount to be paid annually by Funding Agency for the M&V services provided is listed in the table below. If the Funding Agency chooses to continue the M&V services in Guarantee Year Four (4) and beyond, it must notify GESA Contractor within thirty (30) days of the end of the third Guarantee Year. If the Customer wishes to continue the M&V Services past the third Guarantee Year, the pricing for each additional Guarantee Year for M&V services will be the Year 3 M&V Cost annually escalated at 3% in each additional Guarantee Year. The billing for the 1st three Guarantee Years will begin with Final Acceptance of this project.

Year	**M&V Cost**
1	$20,000.00
2	$20,000.00
3	$20,000.00
Total	**$60,000.00**

PART 7

FUNDING AGENCY RESPONSIBILITIES

7-1. In order for GESA Contractor to perform its obligations under this GESA Contract with respect to the Work, the Assured Performance Guarantee, and the M&V Services, Funding Agency shall be responsible for:

1. Providing GESA Contractor, its subcontractors, and its agents reasonable and safe access to all facilities and properties that are subject to the Work and/or M&V Services;

2. Properly maintaining, and performing appropriate preventative maintenance on, all equipment and building systems affecting the Assured Performance Guarantee in accordance with manufacturers' standards and specifications;

3. Providing the utility bills, reports, and similar information reasonably necessary for administering GESA Contractor's obligations under the Assured Performance Guarantee within thirty (30) days of Funding Agency receipt and/or generation or GESA Contractor's request therefore;

4. Providing all records relating to energy and/or water usage and related maintenance of the premises and relevant equipment requested by GESA Contractor;

5. Providing and maintaining a dedicated telephone line and/or TCP/IP remote connection to facilitate remote monitoring of relevant equipment;

6. Promptly notifying GESA Contractor of any change in use or condition or any other matter that may impact the Assured Performance Guarantee.

[remainder of this page left intentionally blank]

ENERGY EFFICIENT MEASURES

The table(s) below summarizes ECM savings and cost and simple payback

ECM #	DOC Selected Project (Energy Related Cost Savings Included) Energy Conservation Measure Description	Install Cost	Annual Energy Savings ($)	Annual O&M Savings ($)	Simple Payback
1	Lighting (Base + ~400 New Fixtures)	$ 1,148,746	$ 107,477	$ 27,942	8.5
1.1	Lighting ADD (1030 New Panels vs Troffer Retro.)	$ 86,913	$ 1,879	$ -	46.3
1.2	Lighting (DOC Implemented Savings-Ext + 32/28W)	$ -	$ 20,781	$ 946	-
2	Lighting Controls	$ 18,661	$ 303	$ -	61.7
3.1	CNG Conversion (incl. site work, lines, Bldg K & Kit)	$ 924,167	$ 350,949	$ 128,827	1.9
3.2	New Steam in Plant - Kewanee (+ 1-350 hp Blr)	$ 1,696,897	$ 53,173	$ 23,298	22.2
3.3	New HW Plant (Conv. 800 hp CB; 2 new 350 hp Blrs)	$ 3,428,949	$ 159,299	$ 23,298	18.8
4.1	New HW distribution piping	$ 9,570,341	$ 22,277	$ 21,206	220.1
4.2	New CHW distribution piping	$ 3,601,918	$ -	$ 21,206	169.9
5	Water Conservation - Base w/o non-inmate areas	$ 2,721,734	$ 310,359	$ -	8.8
5b	Domestic Water Housing Unit PRV Replacements	$ 129,172	$ -	$ -	-
6	Central Chilled Water Plant Upgrades	$ 3,342,834	$ 66,995	$ 28,847	34.9
6a	Cooling Towers Replacement (S/S basin)	$ 989,572	$ 3,766	$ -	262.8
7	Building Automation System (BAS) Upgrade	$ 1,727,432	$ 73,558	$ -	23.5
	DOC Energy Consultant Fee	$ 1,175,496			-
	Installation Total	**$ 30,562,832**	**$ 1,170,814**	**$ 275,568**	**21.1**

Owner Controlled Contngency:	$ 150,000		
LESS Energy Related Savings (lump sum):		$ 595,000	Annualized Amount
Net Financed Amount:	**$ 30,712,832**		

Possible Act-129 Incentives:	$ 171,150
Possible PJM Permanent Cap. Redux Pmts (4 yrs):	$ 10,000
(Adjusted Owner Contingency as realized) - **Total:**	$ 331,150

APPENDICES

Appendix A – Utility Rate Analysis

Appendix B – Savings Calculations

Appendix C – Equipment Cut Sheets

Appendix D – Listing of SDB and SB Firms

Appendix E - Small Diverse Business and Small Business Letter of Intent

Appendix F – Entech Design Prints and Specifications

APPENDIX A – Utility Rate Analysis

Electric

SCI Houtzdale's main electric service, meter # L97024705 and Penelec account # 100 002 968 483, is on Penelec's General Service Primary PN-GPD rate schedule. Electric supply is provided by WGL Energy Services Inc. with consumption billed by Penelec. The electric rate used to calculate ECM savings is $0.0753/kWh which is derived from the average rate of the 2018 calendar year ($0.0739/kWh), with an annual escalation of 1% each year until the estimated project completion of 2021. The electric usage, demand, and total cost data used to calculate the average electric rate is supplied from the PSFEI Utility Usage reports and tabulated below.

Electric Data from PSFEI Utility Usage Reports from 2018

Month	Usage kWh	Demand kW	Total Cost
January	943,922	1,910	$68,459
February	915,360	1,910	$67,108
March	950,781	1,528	$68,079
April	815,851	1,503	$60,145
May	831,253	1,701	$65,391
June	993,767	1,935	$73,895
July	1,016,389	1,121	$74,556
August	999,491	1,898	$73,008
September	1,025,646	1,866	$74,988
October	813,986	1,793	$61,953
November	868,932	1,366	$64,405
December	849,915	1,423	$63,226
Total	**11,025,293**	**19,954**	**$815,213**

Coal and Fuel Oil

SCI Houtzdale uses bituminous coal and #2 fuel oil for their heating sources. Coal is supplied by Strishock LLC, account #201060 and fuel oil is supplied by Superior Plus Energy Services, account #1519183. Since TEN is proposing a fuel conversion to compressed natural gas, the coal and fuel oil usage has been converted to MMBtu in order to compare it to the natural gas MMBtu usage post-construction. Therefore, TEN has calculated an overall $/MMBtu rate inclusive of both fuels. The fuel oil usage used in calculating the MMBtu rate is the total oil consumed at the site which includes the oil consumed by the emergency generators. This overall rate used to calculate ECM savings is $12.83/MMBtu derived from an average rate in 2018 of $12.49/MMBtu with a 1% annual escalation rate each year until the estimated project completion of 2021.

Coal and #2 Fuel Oil Data from PSFEI Utility Usage Reports from 2018

Month	Coal Tons	#2 Fuel Oil Gallons	MMBtu	Total Cost
January	324	27,966	11,680	$91,771
February	288	16,970	9,281	$63,674
March	309	16,704	9,748	$63,000
April	37	54,061	8,435	$114,985
May	0	41,073	5,734	$85,843
June	0	37,508	5,236	$77,266

July	0	38,780	5,414	$79,887
August	0	37,519	5,238	$76,164
September	0	36,553	5,103	$82,610
October	0	44,648	6,233	$100,904
November	0	61,041	8,521	$137,953
December	0	64,124	8,952	$144,920
Total	**958**	**476,947**	**89,574**	**$1,118,977**

Propane

SCI Houtzdale uses propane for its cooking fuel and for heating in Building K. Propane is supplied by Provanta Inc., account #P0442 and delivered in gallons. The gallons are converted to thousands of cubic feet (MCuFt) in the monthly utility usage reports from PSFEI. The rate used to calculate ECM savings is $13.70/MCuFt, derived from an average rate in 2018 of $10.62/MCuFt with a 1% annual escalation rate each year until the estimated project completion of 2021.

Propane Data from PSFEI Utility Usage Reports from 2018

Month	Propane MCuFt	Propane Gallons	Total Cost
January	429	4,799	$ 4,603
February	232	2,595	$ 2,393
March	286	3,199	$ 3,069
April	335	3,747	$ 3,596
May	250	2,796	$ 2,374
June	161	1,801	$ 1,526
July	179	2,002	$ 1,696
August	179	2,002	$ 1,696
September	197	2,204	$ 2,288
October	98	1,096	$ 1,144
November	322	3,602	$ 3,744
December	215	2,405	$ 2,496
Total	**2,883**	**32,248**	**$ 30,625**

Water + Sewer

SCI Houtzdale is billed for water usage through the Houtzdale Municipal Authority, account #1 1HOUTZDAL and billed for sewer charges by the Woodward Township Sewage and Water Authority, account #2184-TP. Because of the sewage treatment facility's contract with SCI Houtzdale, their charges are heavily weighed by capital project reimbursement to the treatment facility and do not have a high enough $/gallon rate to be considered for ECM savings calculations. Therefore, TEN has not calculated any sewage charge savings in this project. Per the water supply contract, due for renewal in October 2028, SCI Houtzdale is not charged a consistent per gallon rate for their water usage. TEN has modeled the water supply contract for the 2016, 2017, and 2018 calendar years to calculate an effective rate per thousand gallon which includes O&M costs as well as a minimum flow rate from the water supply plant. The effective water rate used to determine ECM savings is $7.26/kGal derived from the average of the three-year period with a 1% annual escalation rate each year until the estimated project completion of 2021.

Month	Year	Minimum Water	Over Min Water	Total Water	O&M Cost Water $	O&M Adjustment	Mo Creek Proj. Water $	Total Water $	Total Water (w/o capital) $	Effective $ / kgal
Jan	2016	6,975,000	2,946,000	9,921,000	$ 155,133		$ 15,752	$ 170,885	$ 155,133	$ 15.637
Feb	2016	6,300,000	3,232,000	9,532,000	$ 155,133		$ 15,752	$ 170,885	$ 155,133	$ 16.275
Mar	2016	6,975,000	3,126,000	10,101,000	$ 155,133		$ 15,752	$ 170,885	$ 155,133	$ 15.358
Apr	2016	6,750,000	3,402,000	10,152,000	$ 155,133		$ 15,752	$ 170,885	$ 155,133	$ 15.281
May	2016	6,975,000	2,928,000	9,903,000	$ 155,133		$ 15,752	$ 170,885	$ 155,133	$ 15.665
Jun	2016	6,750,000	3,681,000	10,431,000	$ 155,133		$ 15,752	$ 170,885	$ 155,133	$ 14.872
Jul	2016	6,975,000	3,659,000	10,634,000	$ 155,133	$ (25,959)	$ 15,752	$ 144,926	$ 129,174	$ 12.147
Aug	2016	6,975,000	3,673,000	10,648,000	$ 155,133	$ (25,959)	$ 15,752	$ 144,926	$ 129,174	$ 12.131
Sep	2016	6,750,000	3,230,000	9,980,000	$ 155,133	$ (25,959)	$ 15,752	$ 144,926	$ 129,174	$ 12.943
Oct	2016	6,975,000	2,896,000	9,871,000	$ 155,133	$ (25,959)	$ 15,752	$ 144,926	$ 129,174	$ 13.086
Nov	2016	6,750,000	2,800,000	9,550,000	$ 155,133	$ (25,959)	$ 15,752	$ 144,926	$ 129,174	$ 13.526
Dec	2016	6,975,000	3,418,000	10,393,000	$ 155,133	$ (25,959)	$ 15,752	$ 144,926	$ 129,174	$ 12.429
	TOTAL	82,125,000	38,991,000	121,116,000	$ 1,861,595	$ (155,754)	$ 189,025	$ 1,894,866	$ 1,705,841	$ 14.084
					Total Est. System O&M Cost (w/o Capital Projects):				$ 3,344,787	

Month	Year	Minimum Water	Over Min Water	Total Water	O&M Cost Water $	O&M Adjustment	Mo Creek Proj. Water $	Total Water $	Total Water (w/o capital) $	Effective $ / kgal
Jan	2017	6,975,000	1,977,000	8,952,000	$ 116,250		$ 15,752	$ 132,002	$ 116,250	$ 12.986
Feb	2017	6,300,000	2,465,000	8,765,000	$ 116,250		$ 15,752	$ 132,002	$ 116,250	$ 13.263
Mar	2017	6,975,000	2,783,000	9,758,000	$ 116,250		$ 15,752	$ 132,002	$ 116,250	$ 11.913
Apr	2017	6,750,000	2,514,000	9,264,000	$ 116,250		$ 15,752	$ 132,002	$ 116,250	$ 12.549
May	2017	6,975,000	2,658,000	9,633,000	$ 116,250		$ 15,752	$ 132,002	$ 116,250	$ 12.068
Jun	2017	6,750,000	2,727,000	9,477,000	$ 116,250		$ 15,752	$ 132,002	$ 116,250	$ 12.267
Jul	2017	6,975,000	3,409,000	10,384,000	$ 116,250	$ (79,805)	$ 15,752	$ 52,197	$ 36,445	$ 3.510
Aug	2017	6,975,000	3,205,000	10,180,000	$ 116,250	$ (79,805)	$ 15,752	$ 52,197	$ 36,445	$ 3.580
Sep	2017	6,750,000	3,673,000	10,423,000	$ 116,250	$ (79,805)	$ 15,752	$ 52,197	$ 36,445	$ 3.497
Oct	2017	6,975,000	2,451,000	9,426,000	$ 116,250	$ (79,805)	$ 15,752	$ 52,197	$ 36,445	$ 3.866
Nov	2017	6,750,000	2,484,000	9,234,000	$ 116,250	$ (79,805)	$ 15,752	$ 52,197	$ 36,445	$ 3.947
Dec	2017	6,975,000	2,642,000	9,617,000	$ 116,250	$ (79,805)	$ 15,752	$ 52,197	$ 36,445	$ 3.790
	TOTAL	82,125,000	32,988,000	115,113,000	$ 1,395,000	$ (478,830)	$ 189,025	$ 1,105,194	$ 916,170	$ 7.959
					Total Est. System O&M Cost (w/o Capital Projects):				$ 1,761,865	

Month	Year	Minimum Water	Over Min Water	Total Water	O&M Cost Water $	O&M Adjustment	Mo Creek Proj. Water $	Total Water $	Total Water (w/o capital) $	Effective $ / kgal
Jan	2018	6,975,000	2,640,000	9,615,000	$ 115,048		$ 15,752	$ 130,800	$ 115,048	$ 11.965
Feb	2018	6,300,000	2,561,530	8,861,530	$ 115,048		$ 15,752	$ 130,800	$ 115,048	$ 12.983
Mar	2018	6,975,000	3,119,590	10,094,590	$ 115,048		$ 15,752	$ 130,800	$ 115,048	$ 11.397
Apr	2018	6,750,000	2,728,880	9,478,880	$ 115,048		$ 15,752	$ 130,800	$ 115,048	$ 12.137
May	2018	6,975,000	2,952,000	9,927,000	$ 115,048		$ 15,752	$ 130,800	$ 115,048	$ 11.589
Jun	2018	6,750,000	3,494,000	10,244,000	$ 115,048		$ 15,752	$ 130,800	$ 115,048	$ 11.231
Jul	2018	6,975,000	3,107,000	10,082,000	$ 115,048	$ 62,075	$ 15,752	$ 192,875	$ 177,123	$ 17.568
Aug	2018	6,975,000	3,456,000	10,431,000	$ 115,048	$ 62,075	$ 15,752	$ 192,875	$ 177,123	$ 16.980
Sep	2018	6,750,000	3,195,000	9,945,000	$ 115,048	$ 62,075	$ 15,752	$ 192,875	$ 177,123	$ 17.810
Oct	2018	6,975,000	3,070,000	10,045,000	$ 115,048	$ 62,075	$ 15,752	$ 192,875	$ 177,123	$ 17.633
Nov	2018	6,750,000	2,646,000	9,396,000	$ 115,048	$ 62,075	$ 15,752	$ 192,875	$ 177,123	$ 18.851
Dec	2018	6,975,000	2,548,000	9,523,000	$ 115,048	$ 62,075	$ 15,752	$ 192,875	$ 177,123	$ 18.600
	TOTAL	82,125,000	35,518,000	117,643,000	$ 1,380,575	$ 372,452	$ 189,025	$ 1,942,052	$ 1,753,027	$ 14.901
					Total Est. System O&M Cost (w/o Capital Projects):				$ 3,506,054	

3-Year Average (2016, 2017, 2018)	
231,379,836	Est Total HMA System Billed Customer Volume
117,957,333	SCI Baseyear Volume
35,832,333	Maximum Potential Savings Volume
82,125,000	Post Retrofit Target Volume
195,547,502	Post Retrofit System Volume
42.00%	Post Retrofit % Volume
$ 1,205,706	Post Retrofit SCI Cost
$ 252,640	Maximum Volume Reduction $ Savings

Appendix B

Savings Calculations

SAVINGS CALCULATIONS

ECM-1 and 1.1 LED Lighting Upgrades (New Panel Fixtures vs. Retrofit)
ECM-2 Lighting Controls

SCI Houtzdale Option 1.1 Add (1030
New LED Panels vs. Troffer Retro)

Line #	Facility Area	Space	Pre Fixture Qty	Pre Watts/ Fixt	Pre Description	Post Fixture Qty	Post Watt/ Fixt	Post Description	Wallswitch Sensor	Ceiling Sensor	Hours of Operation	Base kW	Proposed kW	Base kWh	Proposed kWh	Luminaire Part #	Lamp Part #	Driver Part#	Misc. Parts
1	A Block Common	A Block Main Entry	1	43	4' Wraparound; Tamper-Proof Surface Mounted Fluorescent, (2) 48", Super T-8 lamp, Instant Start Ballast, NLO (BF: .85-.95) Prismatic Acrylic Diffuser	1	24	Surface Mounted T8 LED Retrofit Lamp with External Driver LED 4' T8 Lamp (2) 12W Lamps			8760	0.04	0.02	379	208	-	GE 34235 LEDT8/LC/G/4/840	GE 21378 LED/DR/D2L/LW	-
2	A Block Common	Main Vestibule	3	266	2'x2' Troffer Recessed Flanged Metal Halide, (1) 250W lamp Prismatic Acrylic Diffuser	3	49	Recessed Flanged Chip On Board (COB) Type Screw-in / Bypass Existing Ballast Light Emitting Diode Lamp, Screw-in, (1) 54W lamp			8760	0.80	0.15	6,997	1,277	-	KEYSTONE KT-LED54HID-EX39-840-D	-	-
3	A Block Common	Main Vestibule	1	19	Universal Face Exit Sign; Black Surface Mounted Compact Fluorescent, twin, (2) 7W lamp (No Diffuser)	1	2	Surface Mounted Upgrade EXIT Sign LED Light Fixture. (1) 2W			8760	0.02	0.00	166	17	-	TCP 20716 RD LED PADDLE RETRO HARDWIRE	-	-
4	A Block Common	Office	2	43	4' Wraparound; Tamper-Proof Surface Mounted Fluorescent, (2) 48", Super T-8 lamp, Instant Start Ballast, NLO (BF: .85-.95) Prismatic Acrylic Diffuser	2	24	Surface Mounted T8 LED Retrofit Lamp with External Driver LED 4' T8 Lamp (2) 12W Lamps			3640	0.09	0.05	315	173	-	GE 34235 LEDT8/LC/G/4/840	GE 21378 LED/DR/D2L/LW	-
5	A Block Common	Custodial Supply	2	43	4' Wraparound; Tamper-Proof Surface Mounted Fluorescent, (2) 48", Super T-8 lamp, Instant Start Ballast, NLO (BF: .85-.95) Prismatic Acrylic Diffuser	2	24	Surface Mounted T8 LED Retrofit Lamp with External Driver LED 4' T8 Lamp (2) 12W Lamps			1560	0.09	0.05	135	74	-	GE 34235 LEDT8/LC/G/4/840	GE 21378 LED/DR/D2L/LW	-
6	A Block Common	Staff Restroom	1	43	4' Wraparound; Tamper-Proof Surface Mounted Fluorescent, (2) 48", Super T-8 lamp, Instant Start Ballast, NLO (BF: .85-.95) Prismatic Acrylic Diffuser	1	24	Surface Mounted T8 LED Retrofit Lamp with External Driver LED 4' T8 Lamp (2) 12W Lamps			1456	0.04	0.02	63	35	-	GE 34235 LEDT8/LC/G/4/840	GE 21378 LED/DR/D2L/LW	-
7	A Block Common	Custodial Closet	1	43	4' Wraparound; Tamper-Proof Surface Mounted Fluorescent, (2) 48", Super T-8 lamp, Instant Start Ballast, NLO (BF: .85-.95) Prismatic Acrylic Diffuser	1	24	Surface Mounted T8 LED Retrofit Lamp with External Driver LED 4' T8 Lamp (2) 12W Lamps			1456	0.04	0.02	63	35	-	GE 34235 LEDT8/LC/G/4/840	GE 21378 LED/DR/D2L/LW	-
8	A Block Common	Stairwell / Upper Open Office	1	43	4' Corner Mount Wall Vanity; Tamper-Proof Wall Mounted Fluorescent, (2) 48", Super T-8 lamp, Instant Start Ballast, NLO (BF: .85-.95) Prismatic Acrylic Diffuser	1	24	Wall Mounted T8 LED Retrofit Lamp with External Driver LED 4' T8 Lamp (2) 12W Lamps			3640	0.04	0.02	158	86	-	GE 34235 LEDT8/LC/G/4/840	GE 21378 LED/DR/D2L/LW	-
9	A Block Common	Stairwell / Upper Open Office	3	43	4' Wraparound; Tamper-Proof Surface Mounted Fluorescent, (2) 48", Super T-8 lamp, Instant Start Ballast, NLO (BF: .85-.95) Prismatic Acrylic Diffuser	3	24	Surface Mounted T8 LED Retrofit Lamp with External Driver LED 4' T8 Lamp (2) 12W Lamps			3640	0.13	0.07	473	259	-	GE 34235 LEDT8/LC/G/4/840	GE 21378 LED/DR/D2L/LW	-
10	A Block Common	Stairwell / Upper Open Office	12	65	2'x4' Troffer Recessed Flanged Fluorescent, (3) 48", Super T-8 lamp, Instant Start Ballast, NLO (BF: .85-.95) Deep Cell Parabolic Diffuser	12	36	Recessed Flanged T8 LED Retrofit Lamp with External Driver LED 4' T8 Lamp (3) 12W Lamps			3640	0.78	0.43	2,838	1,557	-	GE 34235 LEDT8/LC/G/4/840	GE 21379 LED/DR/D4L/LW	-
11	A Block Common	Stairwell / Upper Open Office	2	19	Universal Face Exit Sign; Black Surface Mounted Compact Fluorescent, twin, (2) 7W lamp (No Diffuser)	2	2	Surface Mounted Upgrade EXIT Sign LED Light Fixture. (1) 2W			8760	0.04	0.00	332	35	-	TCP 20716 RD LED PADDLE RETRO HARDWIRE	-	-
12	A Block Common	Office	2	65	2'x4' Dimmable Recessed Troffer Recessed Flanged Fluorescent, (3) 48", Super T-8 lamp, Instant Start Ballast, NLO (BF: .85-.95) Deep Cell Parabolic Diffuser	2	36	Recessed Flanged T8 LED Retrofit Lamp with External Driver LED 4' T8 Lamp (3) 12W Lamps			3640	0.13	0.07	473	259	-	GE 34235 LEDT8/LC/G/4/840	GE 21379 LED/DR/D4L/LW	-
13	A Block Common	Office	4	65	2'x4' Troffer Recessed Flanged Fluorescent, (3) 48", Super T-8 lamp, Instant Start Ballast, NLO (BF: .85-.95) Prismatic Acrylic Diffuser	4	36	Recessed Flanged T8 LED Retrofit Lamp with External Driver LED 4' T8 Lamp (3) 12W Lamps			3640	0.26	0.14	946	519	-	GE 34235 LEDT8/LC/G/4/840	GE 21379 LED/DR/D4L/LW	-
14	A Block Common	Office	2	65	2'x4' Troffer Recessed Flanged Fluorescent, (3) 48", Super T-8 lamp, Instant Start Ballast, NLO (BF: .85-.95) Prismatic Acrylic Diffuser	2	36	Recessed Flanged T8 LED Retrofit Lamp with External Driver LED 4' T8 Lamp (3) 12W Lamps			3640	0.13	0.07	473	259	-	GE 34235 LEDT8/LC/G/4/840	GE 21379 LED/DR/D4L/LW	-
15	A Block Common	Office Supply Closet	1	65	2'x4' Troffer Recessed Flanged Fluorescent, (3) 48", Super T-8 lamp, Instant Start Ballast, NLO (BF: .85-.95) Prismatic Acrylic Diffuser	1	36	Recessed Flanged T8 LED Retrofit Lamp with External Driver LED 4' T8 Lamp (3) 12W Lamps			520	0.06	0.04	34	19	-	GE 34235 LEDT8/LC/G/4/840	GE 21379 LED/DR/D4L/LW	-
16	A Block Common	Pipe Chase	1	43	4' Industrial Chain Mounted Fluorescent, (2) 48", Super T-8 lamp, Instant Start Ballast, NLO (BF: .85-.95) (No Diffuser)	1	24	Chain Mounted T8 LED Retrofit Lamp with External Driver LED 4' T8 Lamp (2) 12W Lamps			200	0.04	0.02	9	5	-	GE 34235 LEDT8/LC/G/4/840	GE 21378 LED/DR/D2L/LW	-
17	A Block Common	Pipe Chase	1	43	4' Industrial Chain Mounted Fluorescent, (2) 48", Super T-8 lamp, Instant Start Ballast, NLO (BF: .85-.95) (No Diffuser)	1	24	Chain Mounted T8 LED Retrofit Lamp with External Driver LED 4' T8 Lamp (2) 12W Lamps			200	0.04	0.02	9	5	-	GE 34235 LEDT8/LC/G/4/840	GE 21378 LED/DR/D2L/LW	-
18	A Block Common	Back Stairwell	6	43	4' Wraparound; Tamper-Proof Surface Mounted Fluorescent, (2) 48", Super T-8 lamp, Instant Start Ballast, NLO (BF: .85-.95) Prismatic Acrylic Diffuser	6	24	Surface Mounted T8 LED Retrofit Lamp with External Driver LED 4' T8 Lamp (2) 12W Lamps			8760	0.26	0.14	2,277	1,249	-	GE 34235 LEDT8/LC/G/4/840	GE 21378 LED/DR/D2L/LW	-
19	A Block Common	Back Stairwell	1	19	Universal Face Exit Sign; Black Surface Mounted Compact Fluorescent, twin, (2) 7W lamp (No Diffuser)	1	2	Surface Mounted Upgrade EXIT Sign LED Light Fixture. (1) 2W			8760	0.02	0.00	166	17	-	TCP 20716 RD LED PADDLE RETRO HARDWIRE	-	-
20	A Block Common	A.003 Mechanical Equipment Room	13	43	4' Industrial Chain Mounted Fluorescent, (2) 48", Super T-8 lamp, Instant Start Ballast, NLO (BF: .85-.95) (No Diffuser)	13	24	Chain Mounted T8 LED Retrofit Lamp with External Driver LED 4' T8 Lamp (2) 12W Lamps			520	0.56	0.31	293	161	-	GE 34235 LEDT8/LC/G/4/840	GE 21378 LED/DR/D2L/LW	-
21	A Block Common	A.003 Mechanical Equipment Room	2	19	Universal Face Exit Sign; White Surface Mounted Compact Fluorescent, twin, (2) 7W lamp (No Diffuser)	2	3	Surface Mounted Universal Face Exit Sign; White LED Light Fixture. (1) 3W			8760	0.04	0.01	332	52	TCP 22743 RD LED EXIT BBU WH HOUSING	-	-	-
22	A Block Common	Outside Electrical	3	43	4' Industrial Chain Mounted Fluorescent, (2) 48", Super T-8 lamp, Instant Start Ballast, NLO (BF: .85-.95) (No Diffuser)	3	24	Chain Mounted T8 LED Retrofit Lamp with External Driver LED 4' T8 Lamp (2) 12W Lamps			520	0.13	0.07	68	37	-	GE 34235 LEDT8/LC/G/4/840	GE 21378 LED/DR/D2L/LW	-
23	A Block Common	A.002 Security Panel Closet	1	43	4' Wraparound; Tamper-Proof Surface Mounted Fluorescent, (2) 48", Super T-8 lamp, Instant Start Ballast, NLO (BF: .85-.95) Prismatic Acrylic Diffuser	1	24	Surface Mounted T8 LED Retrofit Lamp with External Driver LED 4' T8 Lamp (2) 12W Lamps			520	0.04	0.02	23	12	-	GE 34235 LEDT8/LC/G/4/840	GE 21378 LED/DR/D2L/LW	-
24	A Block A Side	A Block A Side Dayroom	6	266	2'x2' Troffer Recessed Metal Halide, (1) 250W lamp Prismatic Acrylic Diffuser	6	49	Recessed Chip On Board (COB) Type Screw-in / Bypass Existing Ballast Light Emitting Diode Lamp, Screw-in, (1) 54W lamp			5824	1.60	0.29	9,303	1,698	-	KEYSTONE KT-LED54HID-EX39-840-D	-	-
25	A Block A Side	A Block A Side Dayroom	16	266	2'x2' Troffer Recessed Flanged Metal Halide, (1) 250W lamp Prismatic Acrylic Diffuser	16	49	Recessed Flanged Chip On Board (COB) Type Screw-in / Bypass Existing Ballast Light Emitting Diode Lamp, Screw-in, (1) 54W lamp			5824	4.26	0.78	24,809	4,529	-	KEYSTONE KT-LED54HID-EX39-840-D	-	-
26	A Block A Side	A Block A Side Dayroom	7	43	4' Corner Mount Wall Vanity; Tamper-Proof Wall Mounted Fluorescent, (2) 48", Super T-8 lamp, Instant Start Ballast, NLO (BF: .85-.95) Prismatic Acrylic Diffuser	7	24	Wall Mounted T8 LED Retrofit Lamp with External Driver LED 4' T8 Lamp (2) 12W Lamps			5824	0.30	0.17	1,766	969	-	GE 34235 LEDT8/LC/G/4/840	GE 21378 LED/DR/D2L/LW	-
27	A Block A Side	A Block A Side Dayroom	1	43	4' Wraparound; Tamper-Proof Wall Mounted Fluorescent, (2) 48", Super T-8 lamp, Instant Start Ballast, NLO (BF: .85-.95) Prismatic Acrylic Diffuser	1	24	Wall Mounted T8 LED Retrofit Lamp with External Driver LED 4' T8 Lamp (2) 12W Lamps			5824	0.04	0.02	252	138	-	GE 34235 LEDT8/LC/G/4/840	GE 21378 LED/DR/D2L/LW	-
28	A Block A Side	A Block A Side Dayroom	3	19	Universal Face Exit Sign; Black Surface Mounted Compact Fluorescent, twin, (2) 7W lamp (No Diffuser)	3	2	Surface Mounted Upgrade EXIT Sign LED Light Fixture. (1) 2W			8760	0.06	0.01	498	52	-	TCP 20716 RD LED PADDLE RETRO HARDWIRE	-	-
29	A Block A Side	A1 Cell / Dorm	5	65	4' Wraparound; Tamper-Proof Surface Mounted Fluorescent, (3) 48", Super T-8 lamp, Instant Start Ballast, NLO (BF: .85-.95) Prismatic Acrylic Diffuser	5	36	Surface Mounted T8 LED Retrofit Lamp with External Driver LED 4' T8 Lamp (3) 12W Lamps			2912	0.32	0.18	946	519	-	GE 34235 LEDT8/LC/G/4/840	GE 21379 LED/DR/D4L/LW	-
30	A Block A Side	A2-A12 Cell	11	65	4' Wraparound; Tamper-Proof Surface Mounted Fluorescent, (3) 48", Super T-8 lamp, Instant Start Ballast, NLO (BF: .85-.95) Prismatic Acrylic Diffuser	11	36	Surface Mounted T8 LED Retrofit Lamp with External Driver LED 4' T8 Lamp (3) 12W Lamps			2912	0.71	0.39	2,081	1,142	-	GE 34235 LEDT8/LC/G/4/840	GE 21379 LED/DR/D4L/LW	-
31	A Block A Side	A13 Cell	1	65	4' Wraparound; Tamper-Proof Surface Mounted Fluorescent, (3) 48", Super T-8 lamp, Instant Start Ballast, NLO (BF: .85-.95) Prismatic Acrylic Diffuser	1	36	Surface Mounted T8 LED Retrofit Lamp with External Driver LED 4' T8 Lamp (3) 12W Lamps			2912	0.06	0.04	189	104	-	GE 34235 LEDT8/LC/G/4/840	GE 21379 LED/DR/D4L/LW	-
32	A Block A Side	A13 Cell	5	43	4' Wraparound; Tamper-Proof Surface Mounted Fluorescent, (2) 48", Super T-8 lamp, Instant Start Ballast, NLO (BF: .85-.95) Prismatic Acrylic Diffuser	5	24	Surface Mounted T8 LED Retrofit Lamp with External Driver LED 4' T8 Lamp (2) 12W Lamps			2912	0.22	0.12	631	346	-	GE 34235 LEDT8/LC/G/4/840	GE 21378 LED/DR/D2L/LW	-
33	A Block A Side	A14-A64	51	65	4' Wraparound; Tamper-Proof Surface Mounted Fluorescent, (3) 48", Super T-8 lamp, Instant Start Ballast, NLO (BF: .85-.95) Prismatic Acrylic Diffuser	51	36	Surface Mounted T8 LED Retrofit Lamp with External Driver LED 4' T8 Lamp (3) 12W Lamps			2912	3.31	1.82	9,650	5,293	-	GE 34235 LEDT8/LC/G/4/840	GE 21379 LED/DR/D4L/LW	-
34	A Block A Side	Supply Storage Room (between A24 and A25	1	87	4' Wraparound Recessed Fluorescent, (4) 48", Super T-8 lamp, Instant Start Ballast, NLO (BF: .85-.95) (No Diffuser)	1	48	Recessed T8 LED Retrofit Lamp with External Driver LED 4' T8 Lamp (4) 12W Lamps			200	0.09	0.05	17	10	-	GE 34235 LEDT8/LC/G/4/840	GE 21379 LED/DR/D4L/LW	-
35	A Block A Side	Upper Shower Area	7	30	2' Wraparound; Tamper-Proof Surface Mounted Fluorescent, (2) 24", T-8 lamp, Instant Start Ballast, NLO (BF: .85-.95) Prismatic Acrylic Diffuser	7	24	Surface Mounted 2' Wraparound; Tamper-Proof LED Light Fixture. (1) 24W			5824	0.21	0.17	1,214	969	COOPER FAILSAFE FVS8P-2-LD4-2LO-40-UNV-P125-EDC1-WL	-	-	-
36	A Block A Side	Lower Shower Area	6	30	2' Wraparound; Tamper-Proof Surface Mounted Fluorescent, (2) 24", T-8 lamp, Instant Start Ballast, NLO (BF: .85-.95) Prismatic Acrylic Diffuser	6	24	Surface Mounted 2' Wraparound; Tamper-Proof LED Light Fixture. (1) 24W			5824	0.18	0.14	1,041	830	COOPER FAILSAFE FVS8P-2-LD4-2LO-40-UNV-P125-EDC1-WL	-	-	-
37	A Block A Side	Lower Shower Area	1	43	4' Wraparound; Tamper-Proof Surface Mounted Fluorescent, (2) 48", Super T-8 lamp, Instant Start Ballast, NLO (BF: .85-.95) Prismatic Acrylic Diffuser	1	46	Surface Mounted 4' Wraparound; Tamper-Proof LED Light Fixture. (1) 46W			5824	0.04	0.05	252	265	COOPER FAILSAFE FVS8P-4-LD4-2LO-40-UNV-P125-EDC1-WL	-	-	-
38	A Block A Side	Lower Shower Area	2	65	4' Wraparound; Tamper-Proof Surface Mounted Fluorescent, (3) 48", Super T-8 lamp, Instant Start Ballast, NLO (BF: .85-.95) Prismatic Acrylic Diffuser	2	36	Surface Mounted T8 LED Retrofit Lamp with External Driver LED 4' T8 Lamp (3) 12W Lamps			5824	0.13	0.07	757	415	-	GE 34235 LEDT8/LC/G/4/840	GE 21379 LED/DR/D4L/LW	-

Line #	Facility Area	Space	Pre Fixture Qty	Pre Watts/ Fixt	Pre Description	Post Fixture Qty	Post Watt/ Fixt	Post Description	Wallswitch Sensor	Ceiling Sensor	Hours of Operation	Base kW	Proposed kW	Base kWh	Proposed kWh	Luminaire Part #	Lamp Part #	Driver Part#	Misc. Parts
39	A Block A Side	Ice Machine Area	1	43	4' Wraparound; Tamper-Proof Surface Mounted Fluorescent, (2) 48", Super T-8 lamp, Instant Start Ballast, NLO (BF: .85-.95) Prismatic Acrylic Diffuser	1	24	Surface Mounted T8 LED Retrofit Lamp with External Driver LED 4' T8 Lamp (2) 12W Lamps			5824	0.04	0.02	252	138	-	GE 34235 LEDT8/LC/G/4/840	GE 21378 LED/DR/D2L/LW	-
40	A Block A Side	Inmate Restroom	1	43	4' Wraparound; Tamper-Proof Surface Mounted Fluorescent, (2) 48", Super T-8 lamp, Instant Start Ballast, NLO (BF: .85-.95) Prismatic Acrylic Diffuser	1	24	Surface Mounted T8 LED Retrofit Lamp with External Driver LED 4' T8 Lamp (2) 12W Lamps			1456	0.04	0.02	63	35	-	GE 34235 LEDT8/LC/G/4/840	GE 21378 LED/DR/D2L/LW	-
41	A Block A Side	Custodial Supply	1	30	2' Wraparound; Tamper-Proof Surface Mounted Fluorescent, (2) 24", T-8 lamp, Instant Start Ballast, NLO (BF: .85-.95) Prismatic Acrylic Diffuser	1	16	Surface Mounted T8 LED Retrofit Lamp with External Driver LED 2' T8 Lamp (2) 8W Lamps			1560	0.03	0.02	46	25	-	GE 36409 LEDT8/LC/G/2/840	GE 21378 LED/DR/D2L/LW	-
42	A Block A Side	Custodial Supply	2	43	4' Wraparound; Tamper-Proof Surface Mounted Fluorescent, (2) 48", Super T-8 lamp, Instant Start Ballast, NLO (BF: .85-.95) Prismatic Acrylic Diffuser	2	24	Surface Mounted T8 LED Retrofit Lamp with External Driver LED 4' T8 Lamp (2) 12W Lamps			1560	0.09	0.05	135	74	-	GE 34235 LEDT8/LC/G/4/840	GE 21378 LED/DR/D2L/LW	-
43	A Block A Side	Custodial Supply	3	43	4' Industrial Surface Mounted Fluorescent, (2) 48", Super T-8 lamp, Instant Start Ballast, NLO (BF: .85-.95) (No Diffuser)	3	24	Surface Mounted T8 LED Retrofit Lamp with External Driver LED 4' T8 Lamp (2) 12W Lamps			1560	0.13	0.07	203	111	-	GE 34235 LEDT8/LC/G/4/840	GE 21378 LED/DR/D2L/LW	-
44	A Block A Side	Pipe Chase	1	43	4' Industrial Surface Mounted Fluorescent, (2) 48", Super T-8 lamp, Instant Start Ballast, NLO (BF: .85-.95) (No Diffuser)	1	24	Surface Mounted T8 LED Retrofit Lamp with External Driver LED 4' T8 Lamp (2) 12W Lamps			200	0.04	0.02	9	5	-	GE 34235 LEDT8/LC/G/4/840	GE 21378 LED/DR/D2L/LW	-
45	A Block A Side	A block A Side Stairwell	2	43	4' Wraparound; Tamper-Proof Surface Mounted Fluorescent, (2) 48", Super T-8 lamp, Instant Start Ballast, NLO (BF: .85-.95) Prismatic Acrylic Diffuser	2	24	Surface Mounted T8 LED Retrofit Lamp with External Driver LED 4' T8 Lamp (2) 12W Lamps			8760	0.09	0.05	759	416	-	GE 34235 LEDT8/LC/G/4/840	GE 21378 LED/DR/D2L/LW	-
46	A Block A Side	A block A Side Stairwell	2	43	4' Wraparound; Tamper-Proof Wall Mounted Fluorescent, (2) 48", Super T-8 lamp, Instant Start Ballast, NLO (BF: .85-.95) Prismatic Acrylic Diffuser	2	24	Wall Mounted T8 LED Retrofit Lamp with External Driver LED 4' T8 Lamp (2) 12W Lamps			8760	0.09	0.05	759	416	-	GE 34235 LEDT8/LC/G/4/840	GE 21378 LED/DR/D2L/LW	-
47	A Block A Side	A block A Side Stairwell	1	3	Universal Face Exit Sign; Black Surface Mounted EXIT C172Light Emitting Diode, (2) 1.5W lamp, Dual Sided (No Diffuser)	1	3	Existing luminaire to remain as is No Retrofit. To remain as is.			8760	0.00	0.00	25	25	-	-	-	-
48	A Block B Side	A Block B Side Dayroom	6	266	2'x2' Troffer Recessed Metal Halide, (1) 250W lamp Prismatic Acrylic Diffuser	6	49	Recessed Chip On Board (COB) Type Screw-in / Bypass Existing Ballast Light Emitting Diode Lamp, Screw-in, (1) 54W lamp			5824	1.60	0.29	9,303	1,698	-	KEYSTONE KT-LED54HID-EX39-840-D	-	-
49	A Block B Side	A Block B Side Dayroom	16	266	2'x2' Troffer Recessed Flanged Metal Halide, (1) 250W lamp Prismatic Acrylic Diffuser	16	49	Recessed Flanged Chip On Board (COB) Type Screw-in / Bypass Existing Ballast Light Emitting Diode Lamp, Screw-in, (1) 54W lamp			5824	4.26	0.78	24,809	4,529	-	KEYSTONE KT-LED54HID-EX39-840-D	-	-
50	A Block B Side	A Block B Side Dayroom	7	43	4' Corner Mount Wall Vanity; Tamper-Proof Wall Mounted Fluorescent, (2) 48", Super T-8 lamp, Instant Start Ballast, NLO (BF: .85-.95) Prismatic Acrylic Diffuser	7	24	Wall Mounted T8 LED Retrofit Lamp with External Driver LED 4' T8 Lamp (2) 12W Lamps			5824	0.30	0.17	1,766	969	-	GE 34235 LEDT8/LC/G/4/840	GE 21378 LED/DR/D2L/LW	-
51	A Block B Side	A Block B Side Dayroom	1	43	4' Wraparound; Tamper-Proof Wall Mounted Fluorescent, (2) 48", Super T-8 lamp, Instant Start Ballast, NLO (BF: .85-.95) Prismatic Acrylic Diffuser	1	24	Wall Mounted T8 LED Retrofit Lamp with External Driver LED 4' T8 Lamp (2) 12W Lamps			5824	0.04	0.02	252	138	-	GE 34235 LEDT8/LC/G/4/840	GE 21378 LED/DR/D2L/LW	-
52	A Block B Side	A Block B Side Dayroom	3	19	Universal Face Exit Sign; Black Surface Mounted Compact Fluorescent, twin, (2) 7W lamp (No Diffuser)	3	2	Surface Mounted Upgrade EXIT Sign LED Light Fixture. (1) 2W			8760	0.06	0.01	498	52	-	TCP 20716 RD LED PADDLE RETRO HARDWIRE	-	-
53	A Block B Side	B1 Cell / Dorm	5	65	4' Wraparound; Tamper-Proof Surface Mounted Fluorescent, (3) 48", Super T-8 lamp, Instant Start Ballast, NLO (BF: .85-.95) Prismatic Acrylic Diffuser	5	36	Surface Mounted T8 LED Retrofit Lamp with External Driver LED 4' T8 Lamp (3) 12W Lamps			2912	0.32	0.18	946	519	-	GE 34235 LEDT8/LC/G/4/840	GE 21379 LED/DR/D4L/LW	-
54	A Block B Side	B2-B12 Cell	11	65	4' Wraparound; Tamper-Proof Surface Mounted Fluorescent, (3) 48", Super T-8 lamp, Instant Start Ballast, NLO (BF: .85-.95) Prismatic Acrylic Diffuser	11	36	Surface Mounted T8 LED Retrofit Lamp with External Driver LED 4' T8 Lamp (3) 12W Lamps			2912	0.71	0.39	2,081	1,142	-	GE 34235 LEDT8/LC/G/4/840	GE 21379 LED/DR/D4L/LW	-
55	A Block B Side	B13 Cell	1	65	4' Wraparound; Tamper-Proof Surface Mounted Fluorescent, (3) 48", Super T-8 lamp, Instant Start Ballast, NLO (BF: .85-.95) Prismatic Acrylic Diffuser	1	36	Surface Mounted T8 LED Retrofit Lamp with External Driver LED 4' T8 Lamp (3) 12W Lamps			2912	0.06	0.04	189	104	-	GE 34235 LEDT8/LC/G/4/840	GE 21379 LED/DR/D4L/LW	-
56	A Block B Side	B13 Cell	5	43	4' Wraparound; Tamper-Proof Surface Mounted Fluorescent, (2) 48", Super T-8 lamp, Instant Start Ballast, NLO (BF: .85-.95) Prismatic Acrylic Diffuser	5	24	Surface Mounted T8 LED Retrofit Lamp with External Driver LED 4' T8 Lamp (2) 12W Lamps			2912	0.22	0.12	631	346	-	GE 34235 LEDT8/LC/G/4/840	GE 21378 LED/DR/D2L/LW	-
57	A Block B Side	B14-B64	51	65	4' Wraparound; Tamper-Proof Surface Mounted Fluorescent, (3) 48", Super T-8 lamp, Instant Start Ballast, NLO (BF: .85-.95) Prismatic Acrylic Diffuser	51	36	Surface Mounted T8 LED Retrofit Lamp with External Driver LED 4' T8 Lamp (3) 12W Lamps			2912	3.31	1.82	9,650	5,293	-	GE 34235 LEDT8/LC/G/4/840	GE 21379 LED/DR/D4L/LW	-
58	A Block B Side	Supply Storage Room (between A24 and A25)	1	87	4' Wraparound Recessed Fluorescent, (4) 48", Super T-8 lamp, Instant Start Ballast, NLO (BF: .85-.95) (No Diffuser)	1	48	Recessed T8 LED Retrofit Lamp with External Driver LED 4' T8 Lamp (4) 12W Lamps			200	0.09	0.05	17	10	-	GE 34235 LEDT8/LC/G/4/840	GE 21379 LED/DR/D4L/LW	-
59	A Block B Side	Upper Shower Area	7	30	2' Wraparound; Tamper-Proof Surface Mounted Fluorescent, (2) 24", T-8 lamp, Instant Start Ballast, NLO (BF: .85-.95) Prismatic Acrylic Diffuser	7	24	Surface Mounted 2' Wraparound; Tamper-Proof LED Light Fixture. (1) 24W			5824	0.21	0.17	1,214	969	COOPER FAILSAFE FVS8P-2-LD4-2LO-40-UNV-P125-EDC1-WL	-	-	-
60	A Block B Side	Lower Shower Area	6	30	2' Wraparound; Tamper-Proof Surface Mounted Fluorescent, (2) 24", T-8 lamp, Instant Start Ballast, NLO (BF: .85-.95) Prismatic Acrylic Diffuser	6	24	Surface Mounted 2' Wraparound; Tamper-Proof LED Light Fixture. (1) 24W			5824	0.18	0.14	1,041	830	COOPER FAILSAFE FVS8P-2-LD4-2LO-40-UNV-P125-EDC1-WL	-	-	-
61	A Block B Side	Lower Shower Area	1	43	4' Wraparound; Tamper-Proof Surface Mounted Fluorescent, (2) 48", Super T-8 lamp, Instant Start Ballast, NLO (BF: .85-.95) Prismatic Acrylic Diffuser	1	46	Surface Mounted 4' Wraparound; Tamper-Proof LED Light Fixture. (1) 46W			5824	0.04	0.05	252	265	COOPER FAILSAFE FVS8P-4-LD4-2LO-40-UNV-P125-EDC1-WL	-	-	-
62	A Block B Side	Lower Shower Area	2	65	4' Wraparound; Tamper-Proof Surface Mounted Fluorescent, (3) 48", Super T-8 lamp, Instant Start Ballast, NLO (BF: .85-.95) Prismatic Acrylic Diffuser	2	36	Surface Mounted T8 LED Retrofit Lamp with External Driver LED 4' T8 Lamp (3) 12W Lamps			5824	0.13	0.07	757	415	-	GE 34235 LEDT8/LC/G/4/840	GE 21379 LED/DR/D4L/LW	-
63	A Block B Side	Ice Machine Area	1	43	4' Wraparound; Tamper-Proof Surface Mounted Fluorescent, (2) 48", Super T-8 lamp, Instant Start Ballast, NLO (BF: .85-.95) Prismatic Acrylic Diffuser	1	24	Surface Mounted T8 LED Retrofit Lamp with External Driver LED 4' T8 Lamp (2) 12W Lamps			5824	0.04	0.02	252	138	-	GE 34235 LEDT8/LC/G/4/840	GE 21378 LED/DR/D2L/LW	-
64	A Block B Side	Inmate Restroom	1	43	4' Wraparound; Tamper-Proof Surface Mounted Fluorescent, (2) 48", Super T-8 lamp, Instant Start Ballast, NLO (BF: .85-.95) Prismatic Acrylic Diffuser	1	24	Surface Mounted T8 LED Retrofit Lamp with External Driver LED 4' T8 Lamp (2) 12W Lamps			1456	0.04	0.02	63	35	-	GE 34235 LEDT8/LC/G/4/840	GE 21378 LED/DR/D2L/LW	-
65	A Block B Side	Custodial Supply	1	30	2' Wraparound; Tamper-Proof Surface Mounted Fluorescent, (2) 24", T-8 lamp, Instant Start Ballast, NLO (BF: .85-.95) Prismatic Acrylic Diffuser	1	16	Surface Mounted T8 LED Retrofit Lamp with External Driver LED 2' T8 Lamp (2) 8W Lamps			1560	0.03	0.02	46	25	-	GE 36409 LEDT8/LC/G/2/840	GE 21378 LED/DR/D2L/LW	-
66	A Block B Side	Custodial Supply	2	43	4' Wraparound; Tamper-Proof Surface Mounted Fluorescent, (2) 48", Super T-8 lamp, Instant Start Ballast, NLO (BF: .85-.95) Prismatic Acrylic Diffuser	2	24	Surface Mounted T8 LED Retrofit Lamp with External Driver LED 4' T8 Lamp (2) 12W Lamps			1560	0.09	0.05	135	74	-	GE 34235 LEDT8/LC/G/4/840	GE 21378 LED/DR/D2L/LW	-
67	A Block B Side	Custodial Supply	3	43	4' Industrial Surface Mounted Fluorescent, (2) 48", Super T-8 lamp, Instant Start Ballast, NLO (BF: .85-.95) (No Diffuser)	3	24	Surface Mounted T8 LED Retrofit Lamp with External Driver LED 4' T8 Lamp (2) 12W Lamps			1560	0.13	0.07	203	111	-	GE 34235 LEDT8/LC/G/4/840	GE 21378 LED/DR/D2L/LW	-
68	A Block B Side	Pipe Chase	1	43	4' Industrial Surface Mounted Fluorescent, (2) 48", Super T-8 lamp, Instant Start Ballast, NLO (BF: .85-.95) (No Diffuser)	1	24	Surface Mounted T8 LED Retrofit Lamp with External Driver LED 4' T8 Lamp (2) 12W Lamps			200	0.04	0.02	9	5	-	GE 34235 LEDT8/LC/G/4/840	GE 21378 LED/DR/D2L/LW	-
69	A Block B Side	A block B Side Stairwell	2	43	4' Wraparound; Tamper-Proof Surface Mounted Fluorescent, (2) 48", Super T-8 lamp, Instant Start Ballast, NLO (BF: .85-.95) Prismatic Acrylic Diffuser	2	24	Surface Mounted T8 LED Retrofit Lamp with External Driver LED 4' T8 Lamp (2) 12W Lamps			8760	0.09	0.05	759	416	-	GE 34235 LEDT8/LC/G/4/840	GE 21378 LED/DR/D2L/LW	-
70	A Block B Side	A block B Side Stairwell	2	43	4' Wraparound; Tamper-Proof Wall Mounted Fluorescent, (2) 48", Super T-8 lamp, Instant Start Ballast, NLO (BF: .85-.95) Prismatic Acrylic Diffuser	2	24	Wall Mounted T8 LED Retrofit Lamp with External Driver LED 4' T8 Lamp (2) 12W Lamps			8760	0.09	0.05	759	416	-	GE 34235 LEDT8/LC/G/4/840	GE 21378 LED/DR/D2L/LW	-
71	A Block B Side	A block B Side Stairwell	1	19	Universal Face Exit Sign; Black Surface Mounted Compact Fluorescent, twin, (2) 7W lamp (No Diffuser)	1	2	Surface Mounted Upgrade EXIT Sign LED Light Fixture. (1) 2W			8760	0.02	0.00	166	17	-	TCP 20716 RD LED PADDLE RETRO HARDWIRE	-	-
72	B Block Common	B Block Main Entry	1	43	4' Wraparound; Tamper-Proof Surface Mounted Fluorescent, (2) 48", Super T-8 lamp, Instant Start Ballast, NLO (BF: .85-.95) Prismatic Acrylic Diffuser	1	24	Surface Mounted T8 LED Retrofit Lamp with External Driver LED 4' T8 Lamp (2) 12W Lamps			8760	0.04	0.02	379	208	-	GE 34235 LEDT8/LC/G/4/840	GE 21378 LED/DR/D2L/LW	-
73	B Block Common	Main Vestibule	3	266	2'x2' Troffer Recessed Flanged Metal Halide, (1) 250W lamp Prismatic Acrylic Diffuser	3	49	Recessed Flanged Chip On Board (COB) Type Screw-in / Bypass Existing Ballast Light Emitting Diode Lamp, Screw-in, (1) 54W lamp			8760	0.80	0.15	6,997	1,277	-	KEYSTONE KT-LED54HID-EX39-840-D	-	-
74	B Block Common	Main Vestibule	1	19	Universal Face Exit Sign; Black Surface Mounted Compact Fluorescent, twin, (2) 7W lamp (No Diffuser)	1	2	Surface Mounted Upgrade EXIT Sign LED Light Fixture. (1) 2W			8760	0.02	0.00	166	17	-	TCP 20716 RD LED PADDLE RETRO HARDWIRE	-	-
75	B Block Common	Office	2	43	4' Wraparound; Tamper-Proof Surface Mounted Fluorescent, (2) 48", Super T-8 lamp, Instant Start Ballast, NLO (BF: .85-.95) Prismatic Acrylic Diffuser	2	24	Surface Mounted T8 LED Retrofit Lamp with External Driver LED 4' T8 Lamp (2) 12W Lamps			3640	0.09	0.05	315	173	-	GE 34235 LEDT8/LC/G/4/840	GE 21378 LED/DR/D2L/LW	-
76	B Block Common	Custodial Supply	2	43	4' Wraparound; Tamper-Proof Surface Mounted Fluorescent, (2) 48", Super T-8 lamp, Instant Start Ballast, NLO (BF: .85-.95) Prismatic Acrylic Diffuser	2	24	Surface Mounted T8 LED Retrofit Lamp with External Driver LED 4' T8 Lamp (2) 12W Lamps			1560	0.09	0.05	135	74	-	GE 34235 LEDT8/LC/G/4/840	GE 21378 LED/DR/D2L/LW	-
77	B Block Common	Staff Restroom	1	43	4' Wraparound; Tamper-Proof Surface Mounted Fluorescent, (2) 48", Super T-8 lamp, Instant Start Ballast, NLO (BF: .85-.95) Prismatic Acrylic Diffuser	1	24	Surface Mounted T8 LED Retrofit Lamp with External Driver LED 4' T8 Lamp (2) 12W Lamps			1456	0.04	0.02	63	35	-	GE 34235 LEDT8/LC/G/4/840	GE 21378 LED/DR/D2L/LW	-

Line #	Facility Area	Space	Pre Fixture Qty	Pre Watts/ Fixt	Pre Description	Post Fixture Qty	Post Watt/ Fixt	Post Description	Wallswitch Sensor	Ceiling Sensor	Hours of Operation	Base kW	Proposed kW	Base kWh	Proposed kWh	Luminaire Part #	Lamp Part #	Driver Part#	Misc. Parts
78	B Block Common	Custodial Closet	1	43	4' Wraparound; Tamper-Proof Surface Mounted Fluorescent, (2) 48", Super T-8 lamp, Instant Start Ballast, NLO (BF: .85-.95) Prismatic Acrylic Diffuser	1	24	Surface Mounted T8 LED Retrofit Lamp with External Driver LED 4' T8 Lamp (2) 12W Lamps			1456	0.04	0.02	63	35	-	GE 34235 LEDT8/LC/G/4/840	GE 21378 LED/DR/D2L/LW	-
79	B Block Common	Stairwell / Upper Open Office	1	43	4' Corner Mount Wall Vanity; Tamper-Proof Wall Mounted Fluorescent, (2) 48", Super T-8 lamp, Instant Start Ballast, NLO (BF: .85-.95) Prismatic Acrylic Diffuser	1	24	Wall Mounted T8 LED Retrofit Lamp with External Driver LED 4' T8 Lamp (2) 12W Lamps			3640	0.04	0.02	158	86	-	GE 34235 LEDT8/LC/G/4/840	GE 21378 LED/DR/D2L/LW	-
80	B Block Common	Stairwell / Upper Open Office	3	43	4' Wraparound; Tamper-Proof Surface Mounted Fluorescent, (2) 48", Super T-8 lamp, Instant Start Ballast, NLO (BF: .85-.95) Prismatic Acrylic Diffuser	3	24	Surface Mounted T8 LED Retrofit Lamp with External Driver LED 4' T8 Lamp (2) 12W Lamps			3640	0.13	0.07	473	259	-	GE 34235 LEDT8/LC/G/4/840	GE 21378 LED/DR/D2L/LW	-
81	B Block Common	Stairwell / Upper Open Office	12	65	2'x4' Troffer Recessed Flanged Fluorescent, (3) 48", Super T-8 lamp, Instant Start Ballast, NLO (BF: .85-.95) Deep Cell Parabolic Diffuser	12	36	Recessed Flanged T8 LED Retrofit Lamp with External Driver LED 4' T8 Lamp (3) 12W Lamps			3640	0.78	0.43	2,838	1,557	-	GE 34235 LEDT8/LC/G/4/840	GE 21379 LED/DR/D4L/LW	-
82	B Block Common	Stairwell / Upper Open Office	2	19	Universal Face Exit Sign; Black Surface Mounted Compact Fluorescent, twin, (2) 7W lamp (No Diffuser)	2	2	Surface Mounted Upgrade EXIT Sign LED Light Fixture. (1) 2W			8760	0.04	0.00	332	35	-	TCP 20716 RD LED PADDLE RETRO HARDWIRE	-	-
83	B Block Common	Office	2	65	2'x4' Dimmable Recessed Troffer Recessed Flanged Fluorescent, (3) 48", Super T-8 lamp, Instant Start Ballast, NLO (BF: .85-.95) Deep Cell Parabolic Diffuser	2	36	Recessed Flanged T8 LED Retrofit Lamp with External Driver LED 4' T8 Lamp (3) 12W Lamps			3640	0.13	0.07	473	259	-	GE 34235 LEDT8/LC/G/4/840	GE 21379 LED/DR/D4L/LW	-
84	B Block Common	Office	4	65	2'x4' Troffer Recessed Flanged Fluorescent, (3) 48", Super T-8 lamp, Instant Start Ballast, NLO (BF: .85-.95) Prismatic Acrylic Diffuser	4	36	Recessed Flanged T8 LED Retrofit Lamp with External Driver LED 4' T8 Lamp (3) 12W Lamps			3640	0.26	0.14	946	519	-	GE 34235 LEDT8/LC/G/4/840	GE 21379 LED/DR/D4L/LW	-
85	B Block Common	Office	2	65	2'x4' Troffer Recessed Flanged Fluorescent, (3) 48", Super T-8 lamp, Instant Start Ballast, NLO (BF: .85-.95) Prismatic Acrylic Diffuser	2	36	Recessed Flanged T8 LED Retrofit Lamp with External Driver LED 4' T8 Lamp (3) 12W Lamps			3640	0.13	0.07	473	259	-	GE 34235 LEDT8/LC/G/4/840	GE 21379 LED/DR/D4L/LW	-
86	B Block Common	Office Supply Closet	1	65	2'x4' Troffer Recessed Flanged Fluorescent, (3) 48", Super T-8 lamp, Instant Start Ballast, NLO (BF: .85-.95) Prismatic Acrylic Diffuser	1	36	Recessed Flanged T8 LED Retrofit Lamp with External Driver LED 4' T8 Lamp (3) 12W Lamps			520	0.06	0.04	34	19	-	GE 34235 LEDT8/LC/G/4/840	GE 21379 LED/DR/D4L/LW	-
87	B Block Common	Pipe Chase	1	43	4' Industrial Chain Mounted Fluorescent, (2) 48", Super T-8 lamp, Instant Start Ballast, NLO (BF: .85-.95) (No Diffuser)	1	24	Chain Mounted T8 LED Retrofit Lamp with External Driver LED 4' T8 Lamp (2) 12W Lamps			200	0.04	0.02	9	5	-	GE 34235 LEDT8/LC/G/4/840	GE 21378 LED/DR/D2L/LW	-
88	B Block Common	Pipe Chase	1	43	4' Industrial Chain Mounted Fluorescent, (2) 48", Super T-8 lamp, Instant Start Ballast, NLO (BF: .85-.95) (No Diffuser)	1	24	Chain Mounted T8 LED Retrofit Lamp with External Driver LED 4' T8 Lamp (2) 12W Lamps			200	0.04	0.02	9	5	-	GE 34235 LEDT8/LC/G/4/840	GE 21378 LED/DR/D2L/LW	-
89	B Block Common	Back Stairwell	6	43	4' Wraparound; Tamper-Proof Surface Mounted Fluorescent, (2) 48", Super T-8 lamp, Instant Start Ballast, NLO (BF: .85-.95) Prismatic Acrylic Diffuser	6	24	Surface Mounted T8 LED Retrofit Lamp with External Driver LED 4' T8 Lamp (2) 12W Lamps			8760	0.26	0.14	2,277	1,249	-	GE 34235 LEDT8/LC/G/4/840	GE 21378 LED/DR/D2L/LW	-
90	B Block Common	Back Stairwell	1	19	Universal Face Exit Sign; Black Surface Mounted Compact Fluorescent, twin, (2) 7W lamp (No Diffuser)	1	2	Surface Mounted Upgrade EXIT Sign LED Light Fixture. (1) 2W			8760	0.02	0.00	166	17	-	TCP 20716 RD LED PADDLE RETRO HARDWIRE	-	-
91	B Block Common	A.003 Mechanical Equipment Room	13	43	4' Industrial Chain Mounted Fluorescent, (2) 48", Super T-8 lamp, Instant Start Ballast, NLO (BF: .85-.95) (No Diffuser)	13	24	Chain Mounted T8 LED Retrofit Lamp with External Driver LED 4' T8 Lamp (2) 12W Lamps			520	0.56	0.31	293	161	-	GE 34235 LEDT8/LC/G/4/840	GE 21378 LED/DR/D2L/LW	-
92	B Block Common	A.003 Mechanical Equipment Room	2	19	Universal Face Exit Sign; White Surface Mounted Compact Fluorescent, twin, (2) 7W lamp (No Diffuser)	2	3	Surface Mounted Universal Face Exit Sign; White LED Light Fixture. (1) 3W			8760	0.04	0.01	332	52	TCP 22743 RD LED EXIT BBU WH HOUSING	-	-	-
93	B Block Common	Outside Electrical	3	43	4' Industrial Chain Mounted Fluorescent, (2) 48", Super T-8 lamp, Instant Start Ballast, NLO (BF: .85-.95) (No Diffuser)	3	24	Chain Mounted T8 LED Retrofit Lamp with External Driver LED 4' T8 Lamp (2) 12W Lamps			520	0.13	0.07	68	37	-	GE 34235 LEDT8/LC/G/4/840	GE 21378 LED/DR/D2L/LW	-
94	B Block Common	A.002 Security Panel Closet	1	43	4' Wraparound; Tamper-Proof Surface Mounted Fluorescent, (2) 48", Super T-8 lamp, Instant Start Ballast, NLO (BF: .85-.95) Prismatic Acrylic Diffuser	1	24	Surface Mounted T8 LED Retrofit Lamp with External Driver LED 4' T8 Lamp (2) 12W Lamps			520	0.04	0.02	23	12	-	GE 34235 LEDT8/LC/G/4/840	GE 21378 LED/DR/D2L/LW	-
95	B Block A Side	B Block A Side Dayroom	6	266	2'x2' Troffer Recessed Metal Halide, (1) 250W lamp Prismatic Acrylic Diffuser	6	49	Recessed Chip On Board (COB) Type Screw-in / Bypass Existing Ballast Light Emitting Diode Lamp, Screw-in, (1) 54W lamp			5824	1.60	0.29	9,303	1,698	-	KEYSTONE KT-LED54HID-EX39-840-D	-	-
96	B Block A Side	A Block B Side Dayroom	16	266	2'x2' Troffer Recessed Flanged Metal Halide, (1) 250W lamp Prismatic Acrylic Diffuser	16	49	Recessed Flanged Chip On Board (COB) Type Screw-in / Bypass Existing Ballast Light Emitting Diode Lamp, Screw-in, (1) 54W lamp			5824	4.26	0.78	24,809	4,529	-	KEYSTONE KT-LED54HID-EX39-840-D	-	-
97	B Block A Side	B Block A Side Dayroom	7	43	4' Corner Mount Wall Vanity; Tamper-Proof Wall Mounted Fluorescent, (2) 48", Super T-8 lamp, Instant Start Ballast, NLO (BF: .85-.95) Prismatic Acrylic Diffuser	7	24	Wall Mounted T8 LED Retrofit Lamp with External Driver LED 4' T8 Lamp (2) 12W Lamps			5824	0.30	0.17	1,766	969	-	GE 34235 LEDT8/LC/G/4/840	GE 21378 LED/DR/D2L/LW	-
98	B Block A Side	A Block B Side Dayroom	1	43	4' Wraparound; Tamper-Proof Wall Mounted Fluorescent, (2) 48", Super T-8 lamp, Instant Start Ballast, NLO (BF: .85-.95) Prismatic Acrylic Diffuser	1	24	Wall Mounted T8 LED Retrofit Lamp with External Driver LED 4' T8 Lamp (2) 12W Lamps			5824	0.04	0.02	252	138	-	GE 34235 LEDT8/LC/G/4/840	GE 21378 LED/DR/D2L/LW	-
99	B Block A Side	A Block B Side Dayroom	3	19	Universal Face Exit Sign; Black Surface Mounted Compact Fluorescent, twin, (2) 7W lamp (No Diffuser)	3	2	Surface Mounted Upgrade EXIT Sign LED Light Fixture. (1) 2W			8760	0.06	0.01	498	52	-	TCP 20716 RD LED PADDLE RETRO HARDWIRE	-	-
100	B Block A Side	A1 Cell / Dorm	5	65	4' Wraparound; Tamper-Proof Surface Mounted Fluorescent, (3) 48", Super T-8 lamp, Instant Start Ballast, NLO (BF: .85-.95) Prismatic Acrylic Diffuser	5	36	Surface Mounted T8 LED Retrofit Lamp with External Driver LED 4' T8 Lamp (3) 12W Lamps			2912	0.32	0.18	946	519	-	GE 34235 LEDT8/LC/G/4/840	GE 21379 LED/DR/D4L/LW	-
101	B Block A Side	A2-A12 Cell	11	65	4' Wraparound; Tamper-Proof Surface Mounted Fluorescent, (3) 48", Super T-8 lamp, Instant Start Ballast, NLO (BF: .85-.95) Prismatic Acrylic Diffuser	11	36	Surface Mounted T8 LED Retrofit Lamp with External Driver LED 4' T8 Lamp (3) 12W Lamps			2912	0.71	0.39	2,081	1,142	-	GE 34235 LEDT8/LC/G/4/840	GE 21379 LED/DR/D4L/LW	-
102	B Block A Side	A13 Cell	1	65	4' Wraparound; Tamper-Proof Surface Mounted Fluorescent, (3) 48", Super T-8 lamp, Instant Start Ballast, NLO (BF: .85-.95) Prismatic Acrylic Diffuser	1	36	Surface Mounted T8 LED Retrofit Lamp with External Driver LED 4' T8 Lamp (3) 12W Lamps			2912	0.06	0.04	189	104	-	GE 34235 LEDT8/LC/G/4/840	GE 21379 LED/DR/D4L/LW	-
103	B Block A Side	B13 Cell	5	43	4' Wraparound; Tamper-Proof Surface Mounted Fluorescent, (2) 48", Super T-8 lamp, Instant Start Ballast, NLO (BF: .85-.95) Prismatic Acrylic Diffuser	5	24	Surface Mounted T8 LED Retrofit Lamp with External Driver LED 4' T8 Lamp (2) 12W Lamps			2912	0.22	0.12	631	346	-	GE 34235 LEDT8/LC/G/4/840	GE 21378 LED/DR/D2L/LW	-
104	B Block A Side	A14-A64	51	65	4' Wraparound; Tamper-Proof Surface Mounted Fluorescent, (3) 48", Super T-8 lamp, Instant Start Ballast, NLO (BF: .85-.95) Prismatic Acrylic Diffuser	51	36	Surface Mounted T8 LED Retrofit Lamp with External Driver LED 4' T8 Lamp (3) 12W Lamps			2912	3.31	1.82	9,650	5,293	-	GE 34235 LEDT8/LC/G/4/840	GE 21379 LED/DR/D4L/LW	-
105	B Block A Side	Supply Storage Room (between A24 and A25	1	87	4' Wraparound Recessed Fluorescent, (4) 48", Super T-8 lamp, Instant Start Ballast, NLO (BF: .85-.95) (No Diffuser)	1	48	Recessed T8 LED Retrofit Lamp with External Driver LED 4' T8 Lamp (4) 12W Lamps			200	0.09	0.05	17	10	-	GE 34235 LEDT8/LC/G/4/840	GE 21379 LED/DR/D4L/LW	-
106	B Block A Side	Upper Shower Area	7	30	2' Wraparound; Tamper-Proof Surface Mounted Fluorescent, (2) 24", T-8 lamp, Instant Start Ballast, NLO (BF: .85-.95) Prismatic Acrylic Diffuser	7	24	Surface Mounted 2' Wraparound; Tamper-Proof LED Light Fixture. (1) 24W			5824	0.21	0.17	1,214	969	COOPER FAILSAFE FVS8P-2-LD4-2LO-40-UNV-P125-EDC1-WL	-	-	-
107	B Block A Side	Lower Shower Area	6	30	2' Wraparound; Tamper-Proof Surface Mounted Fluorescent, (2) 24", T-8 lamp, Instant Start Ballast, NLO (BF: .85-.95) Prismatic Acrylic Diffuser	6	24	Surface Mounted 2' Wraparound; Tamper-Proof LED Light Fixture. (1) 24W			5824	0.18	0.14	1,041	830	COOPER FAILSAFE FVS8P-2-LD4-2LO-40-UNV-P125-EDC1-WL	-	-	-
108	B Block A Side	Lower Shower Area	1	43	4' Wraparound; Tamper-Proof Surface Mounted Fluorescent, (2) 48", Super T-8 lamp, Instant Start Ballast, NLO (BF: .85-.95) Prismatic Acrylic Diffuser	1	46	Surface Mounted 4' Wraparound; Tamper-Proof LED Light Fixture. (1) 46W			5824	0.04	0.05	252	265	COOPER FAILSAFE FVS8P-4-LD4-2LO-40-UNV-P125-EDC1-WL	-	-	-
109	B Block A Side	Lower Shower Area	2	65	4' Wraparound; Tamper-Proof Surface Mounted Fluorescent, (3) 48", Super T-8 lamp, Instant Start Ballast, NLO (BF: .85-.95) Prismatic Acrylic Diffuser	2	36	Surface Mounted T8 LED Retrofit Lamp with External Driver LED 4' T8 Lamp (3) 12W Lamps			5824	0.13	0.07	757	415	-	GE 34235 LEDT8/LC/G/4/840	GE 21379 LED/DR/D4L/LW	-
110	B Block A Side	Ice Machine Area	1	43	4' Wraparound; Tamper-Proof Surface Mounted Fluorescent, (2) 48", Super T-8 lamp, Instant Start Ballast, NLO (BF: .85-.95) Prismatic Acrylic Diffuser	1	24	Surface Mounted T8 LED Retrofit Lamp with External Driver LED 4' T8 Lamp (2) 12W Lamps			5824	0.04	0.02	252	138	-	GE 34235 LEDT8/LC/G/4/840	GE 21378 LED/DR/D2L/LW	-
111	B Block A Side	Inmate Restroom	1	43	4' Wraparound; Tamper-Proof Surface Mounted Fluorescent, (2) 48", Super T-8 lamp, Instant Start Ballast, NLO (BF: .85-.95) Prismatic Acrylic Diffuser	1	24	Surface Mounted T8 LED Retrofit Lamp with External Driver LED 4' T8 Lamp (2) 12W Lamps			1456	0.04	0.02	63	35	-	GE 34235 LEDT8/LC/G/4/840	GE 21378 LED/DR/D2L/LW	-
112	B Block A Side	Custodial Supply	1	30	2' Wraparound; Tamper-Proof Surface Mounted Fluorescent, (2) 24", T-8 lamp, Instant Start Ballast, NLO (BF: .85-.95) Prismatic Acrylic Diffuser	1	16	Surface Mounted T8 LED Retrofit Lamp with External Driver LED 2' T8 Lamp (2) 8W Lamps			1560	0.03	0.02	46	25	-	GE 36409 LEDT8/LC/G/2/840	GE 21378 LED/DR/D2L/LW	-
113	B Block A Side	Custodial Supply	2	43	4' Wraparound; Tamper-Proof Surface Mounted Fluorescent, (2) 48", Super T-8 lamp, Instant Start Ballast, NLO (BF: .85-.95) Prismatic Acrylic Diffuser	2	24	Surface Mounted T8 LED Retrofit Lamp with External Driver LED 4' T8 Lamp (2) 12W Lamps			1560	0.09	0.05	135	74	-	GE 34235 LEDT8/LC/G/4/840	GE 21378 LED/DR/D2L/LW	-
114	B Block A Side	Custodial Supply	3	43	4' Industrial Surface Mounted Fluorescent, (2) 48", Super T-8 lamp, Instant Start Ballast, NLO (BF: .85-.95) (No Diffuser)	3	24	Surface Mounted T8 LED Retrofit Lamp with External Driver LED 4' T8 Lamp (2) 12W Lamps			1560	0.13	0.07	203	111	-	GE 34235 LEDT8/LC/G/4/840	GE 21378 LED/DR/D2L/LW	-
115	B Block A Side	Pipe Chase	1	43	4' Industrial Surface Mounted Fluorescent, (2) 48", Super T-8 lamp, Instant Start Ballast, NLO (BF: .85-.95) (No Diffuser)	1	24	Surface Mounted T8 LED Retrofit Lamp with External Driver LED 4' T8 Lamp (2) 12W Lamps			200	0.04	0.02	9	5	-	GE 34235 LEDT8/LC/G/4/840	GE 21378 LED/DR/D2L/LW	-
116	B Block A Side	B block A Side Stairwell	2	43	4' Wraparound; Tamper-Proof Surface Mounted Fluorescent, (2) 48", Super T-8 lamp, Instant Start Ballast, NLO (BF: .85-.95) Prismatic Acrylic Diffuser	2	24	Surface Mounted T8 LED Retrofit Lamp with External Driver LED 4' T8 Lamp (2) 12W Lamps			8760	0.09	0.05	759	416	-	GE 34235 LEDT8/LC/G/4/840	GE 21378 LED/DR/D2L/LW	-

Line #	Facility Area	Space	Pre Fixture Qty	Pre Watts/ Fixt	Pre Description	Post Fixture Qty	Post Watt/ Fixt	Post Description	Wallswitch Sensor	Ceiling Sensor	Hours of Operation	Base kW	Proposed kW	Base kWh	Proposed kWh	Luminaire Part #	Lamp Part #	Driver Part#	Misc. Parts
117	B Block A Side	A block B Side Stairwell	2	43	4' Wraparound; Tamper-Proof Wall Mounted Fluorescent, (2) 48", Super T-8 lamp, Instant Start Ballast, NLO (BF: .85-.95) Prismatic Acrylic Diffuser	2	24	Wall Mounted T8 LED Retrofit Lamp with External Driver LED 4' T8 Lamp (2) 12W Lamps			8760	0.09	0.05	759	416	-	GE 34235 LEDT8/LC/G/4/840	GE 21378 LED/DR/D2L/LW	-
118	B Block A Side	A block B Side Stairwell	1	3	Universal Face Exit Sign; Black Surface Mounted EXIT C172Light Emitting Diode, (2) 1.5W lamp, Dual Sided (No Diffuser)	1	3	Existing luminaire to remain as is No Retrofit. To remain as is.			8760	0.00	0.00	25	25	-	-	-	-
119	B Block A Side	B block A Side Stairwell	2	43	4' Wraparound; Tamper-Proof Wall Mounted Fluorescent, (2) 48", Super T-8 lamp, Instant Start Ballast, NLO (BF: .85-.95) Prismatic Acrylic Diffuser	2	24	Wall Mounted T8 LED Retrofit Lamp with External Driver LED 4' T8 Lamp (2) 12W Lamps			8760	0.09	0.05	759	416	-	GE 34235 LEDT8/LC/G/4/840	GE 21378 LED/DR/D2L/LW	-
120	B Block A Side	B block A Side Stairwell	1	19	Universal Face Exit Sign; Black Surface Mounted Compact Fluorescent, twin, (2) 7W lamp (No Diffuser)	1	2	Surface Mounted Upgrade EXIT Sign LED Light Fixture. (1) 2W			8760	0.02	0.00	166	17	-	TCP 20716 RD LED PADDLE RETRO HARDWIRE	-	-
121	B Block B Side	B Block B Side Dayroom	6	266	2'x2' Troffer Recessed Metal Halide, (1) 250W lamp Prismatic Acrylic Diffuser	6	49	Recessed Chip On Board (COB) Type Screw-in / Bypass Existing Ballast Light Emitting Diode Lamp, Screw-in, (1) 54W lamp			5824	1.60	0.29	9,303	1,698	-	KEYSTONE KT-LED54HID-EX39-840-D	-	-
122	B Block B Side	B Block B Side Dayroom	16	266	2'x2' Troffer Recessed Flanged Metal Halide, (1) 250W lamp Prismatic Acrylic Diffuser	16	49	Recessed Flanged Chip On Board (COB) Type Screw-in / Bypass Existing Ballast Light Emitting Diode Lamp, Screw-in, (1) 54W lamp			5824	4.26	0.78	24,809	4,529	-	KEYSTONE KT-LED54HID-EX39-840-D	-	-
123	B Block B Side	B Block B Side Dayroom	7	43	4' Corner Mount Wall Vanity; Tamper-Proof Wall Mounted Fluorescent, (2) 48", Super T-8 lamp, Instant Start Ballast, NLO (BF: .85-.95) Prismatic Acrylic Diffuser	7	24	Wall Mounted T8 LED Retrofit Lamp with External Driver LED 4' T8 Lamp (2) 12W Lamps			5824	0.30	0.17	1,766	969	-	GE 34235 LEDT8/LC/G/4/840	GE 21378 LED/DR/D2L/LW	-
124	B Block B Side	B Block B Side Dayroom	1	43	4' Wraparound; Tamper-Proof Wall Mounted Fluorescent, (2) 48", Super T-8 lamp, Instant Start Ballast, NLO (BF: .85-.95) Prismatic Acrylic Diffuser	1	24	Wall Mounted T8 LED Retrofit Lamp with External Driver LED 4' T8 Lamp (2) 12W Lamps			5824	0.04	0.02	252	138	-	GE 34235 LEDT8/LC/G/4/840	GE 21378 LED/DR/D2L/LW	-
125	B Block B Side	B Block B Side Dayroom	3	19	Universal Face Exit Sign; Black Surface Mounted Compact Fluorescent, twin, (2) 7W lamp (No Diffuser)	3	2	Surface Mounted Upgrade EXIT Sign LED Light Fixture. (1) 2W			8760	0.06	0.01	498	52	-	TCP 20716 RD LED PADDLE RETRO HARDWIRE	-	-
126	B Block B Side	B1 Cell / Dorm	5	65	4' Wraparound; Tamper-Proof Surface Mounted Fluorescent, (3) 48", Super T-8 lamp, Instant Start Ballast, NLO (BF: .85-.95) Prismatic Acrylic Diffuser	5	36	Surface Mounted T8 LED Retrofit Lamp with External Driver LED 4' T8 Lamp (3) 12W Lamps			2912	0.32	0.18	946	519	-	GE 34235 LEDT8/LC/G/4/840	GE 21379 LED/DR/D4L/LW	-
127	B Block B Side	B2-B12 Cell	11	65	4' Wraparound; Tamper-Proof Surface Mounted Fluorescent, (3) 48", Super T-8 lamp, Instant Start Ballast, NLO (BF: .85-.95) Prismatic Acrylic Diffuser	11	36	Surface Mounted T8 LED Retrofit Lamp with External Driver LED 4' T8 Lamp (3) 12W Lamps			2912	0.71	0.39	2,081	1,142	-	GE 34235 LEDT8/LC/G/4/840	GE 21379 LED/DR/D4L/LW	-
128	B Block B Side	B13 Cell	1	65	4' Wraparound; Tamper-Proof Surface Mounted Fluorescent, (3) 48", Super T-8 lamp, Instant Start Ballast, NLO (BF: .85-.95) Prismatic Acrylic Diffuser	1	36	Surface Mounted T8 LED Retrofit Lamp with External Driver LED 4' T8 Lamp (3) 12W Lamps			2912	0.06	0.04	189	104	-	GE 34235 LEDT8/LC/G/4/840	GE 21379 LED/DR/D4L/LW	-
129	B Block B Side	B13 Cell	5	43	4' Wraparound; Tamper-Proof Surface Mounted Fluorescent, (2) 48", Super T-8 lamp, Instant Start Ballast, NLO (BF: .85-.95) Prismatic Acrylic Diffuser	5	24	Surface Mounted T8 LED Retrofit Lamp with External Driver LED 4' T8 Lamp (2) 12W Lamps			2912	0.22	0.12	631	346	-	GE 34235 LEDT8/LC/G/4/840	GE 21378 LED/DR/D2L/LW	-
130	B Block B Side	B14-B64	51	65	4' Wraparound; Tamper-Proof Surface Mounted Fluorescent, (3) 48", Super T-8 lamp, Instant Start Ballast, NLO (BF: .85-.95) Prismatic Acrylic Diffuser	51	36	Surface Mounted T8 LED Retrofit Lamp with External Driver LED 4' T8 Lamp (3) 12W Lamps			2912	3.31	1.82	9,650	5,293	-	GE 34235 LEDT8/LC/G/4/840	GE 21379 LED/DR/D4L/LW	-
131	B Block B Side	Supply Storage Room (between A24 and A25	1	87	4' Wraparound Recessed Fluorescent, (4) 48", Super T-8 lamp, Instant Start Ballast, NLO (BF: .85-.95) (No Diffuser)	1	48	Recessed T8 LED Retrofit Lamp with External Driver LED 4' T8 Lamp (4) 12W Lamps			200	0.09	0.05	17	10	-	GE 34235 LEDT8/LC/G/4/840	GE 21379 LED/DR/D4L/LW	-
132	B Block B Side	Upper Shower Area	7	30	2' Wraparound; Tamper-Proof Surface Mounted Fluorescent, (2) 24", T-8 lamp, Instant Start Ballast, NLO (BF: .85-.95) Prismatic Acrylic Diffuser	7	24	Surface Mounted 2' Wraparound; Tamper-Proof LED Light Fixture. (1) 24W			5824	0.21	0.17	1,214	969	COOPER FAILSAFE FVS8P-2-LD4-2LO-40-UNV-P125-EDC1-WL	-	-	-
133	B Block B Side	Lower Shower Area	6	30	2' Wraparound; Tamper-Proof Surface Mounted Fluorescent, (2) 24", T-8 lamp, Instant Start Ballast, NLO (BF: .85-.95) Prismatic Acrylic Diffuser	6	24	Surface Mounted 2' Wraparound; Tamper-Proof LED Light Fixture. (1) 24W			5824	0.18	0.14	1,041	830	COOPER FAILSAFE FVS8P-2-LD4-2LO-40-UNV-P125-EDC1-WL	-	-	-
134	B Block B Side	Lower Shower Area	1	43	4' Wraparound; Tamper-Proof Surface Mounted Fluorescent, (2) 48", Super T-8 lamp, Instant Start Ballast, NLO (BF: .85-.95) Prismatic Acrylic Diffuser	1	46	Surface Mounted 4' Wraparound; Tamper-Proof LED Light Fixture. (1) 46W			5824	0.04	0.05	252	265	COOPER FAILSAFE FVS8P-4-LD4-2LO-40-UNV-P125-EDC1-WL	-	-	-
135	B Block B Side	Lower Shower Area	2	65	4' Wraparound; Tamper-Proof Surface Mounted Fluorescent, (3) 48", Super T-8 lamp, Instant Start Ballast, NLO (BF: .85-.95) Prismatic Acrylic Diffuser	2	36	Surface Mounted T8 LED Retrofit Lamp with External Driver LED 4' T8 Lamp (3) 12W Lamps			5824	0.13	0.07	757	415	-	GE 34235 LEDT8/LC/G/4/840	GE 21379 LED/DR/D4L/LW	-
136	B Block B Side	Ice Machine Area	1	43	4' Wraparound; Tamper-Proof Surface Mounted Fluorescent, (2) 48", Super T-8 lamp, Instant Start Ballast, NLO (BF: .85-.95) Prismatic Acrylic Diffuser	1	24	Surface Mounted T8 LED Retrofit Lamp with External Driver LED 4' T8 Lamp (2) 12W Lamps			5824	0.04	0.02	252	138	-	GE 34235 LEDT8/LC/G/4/840	GE 21378 LED/DR/D2L/LW	-
137	B Block B Side	Inmate Restroom	1	43	4' Wraparound; Tamper-Proof Surface Mounted Fluorescent, (2) 48", Super T-8 lamp, Instant Start Ballast, NLO (BF: .85-.95) Prismatic Acrylic Diffuser	1	24	Surface Mounted T8 LED Retrofit Lamp with External Driver LED 4' T8 Lamp (2) 12W Lamps			1456	0.04	0.02	63	35	-	GE 34235 LEDT8/LC/G/4/840	GE 21378 LED/DR/D2L/LW	-
138	B Block B Side	Custodial Supply	1	30	2' Wraparound; Tamper-Proof Surface Mounted Fluorescent, (2) 24", T-8 lamp, Instant Start Ballast, NLO (BF: .85-.95) Prismatic Acrylic Diffuser	1	16	Surface Mounted T8 LED Retrofit Lamp with External Driver LED 2' T8 Lamp (2) 8W Lamps			1560	0.03	0.02	46	25	-	GE 36409 LEDT8/LC/G/2/840	GE 21378 LED/DR/D2L/LW	-
139	B Block B Side	Custodial Supply	2	43	4' Wraparound; Tamper-Proof Surface Mounted Fluorescent, (2) 48", Super T-8 lamp, Instant Start Ballast, NLO (BF: .85-.95) Prismatic Acrylic Diffuser	2	24	Surface Mounted T8 LED Retrofit Lamp with External Driver LED 4' T8 Lamp (2) 12W Lamps			1560	0.09	0.05	135	74	-	GE 34235 LEDT8/LC/G/4/840	GE 21378 LED/DR/D2L/LW	-
140	B Block B Side	Custodial Supply	3	43	4' Industrial Surface Mounted Fluorescent, (2) 48", Super T-8 lamp, Instant Start Ballast, NLO (BF: .85-.95) (No Diffuser)	3	24	Surface Mounted T8 LED Retrofit Lamp with External Driver LED 4' T8 Lamp (2) 12W Lamps			1560	0.13	0.07	203	111	-	GE 34235 LEDT8/LC/G/4/840	GE 21378 LED/DR/D2L/LW	-
141	B Block B Side	Pipe Chase	1	43	4' Industrial Surface Mounted Fluorescent, (2) 48", Super T-8 lamp, Instant Start Ballast, NLO (BF: .85-.95) (No Diffuser)	1	24	Surface Mounted T8 LED Retrofit Lamp with External Driver LED 4' T8 Lamp (2) 12W Lamps			200	0.04	0.02	9	5	-	GE 34235 LEDT8/LC/G/4/840	GE 21378 LED/DR/D2L/LW	-
142	B Block B Side	B block B Side Stairwell	2	43	4' Wraparound; Tamper-Proof Surface Mounted Fluorescent, (2) 48", Super T-8 lamp, Instant Start Ballast, NLO (BF: .85-.95) Prismatic Acrylic Diffuser	2	24	Surface Mounted T8 LED Retrofit Lamp with External Driver LED 4' T8 Lamp (2) 12W Lamps			8760	0.09	0.05	759	416	-	GE 34235 LEDT8/LC/G/4/840	GE 21378 LED/DR/D2L/LW	-
143	B Block B Side	B block B Side Stairwell	2	43	4' Wraparound; Tamper-Proof Wall Mounted Fluorescent, (2) 48", Super T-8 lamp, Instant Start Ballast, NLO (BF: .85-.95) Prismatic Acrylic Diffuser	2	24	Wall Mounted T8 LED Retrofit Lamp with External Driver LED 4' T8 Lamp (2) 12W Lamps			8760	0.09	0.05	759	416	-	GE 34235 LEDT8/LC/G/4/840	GE 21378 LED/DR/D2L/LW	-
144	B Block B Side	B block B Side Stairwell	1	3	Universal Face Exit Sign; Black Surface Mounted EXIT C172Light Emitting Diode, (2) 1.5W lamp, Dual Sided (No Diffuser)	1	3	Existing luminaire to remain as is No Retrofit. To remain as is.			8760	0.00	0.00	25	25	-	-	-	-
145	C Block Common	C Block Main Entry	1	43	4' Wraparound; Tamper-Proof Surface Mounted Fluorescent, (2) 48", Super T-8 lamp, Instant Start Ballast, NLO (BF: .85-.95) Prismatic Acrylic Diffuser	1	24	Surface Mounted T8 LED Retrofit Lamp with External Driver LED 4' T8 Lamp (2) 12W Lamps			8760	0.04	0.02	379	208	-	GE 34235 LEDT8/LC/G/4/840	GE 21378 LED/DR/D2L/LW	-
146	C Block Common	Main Vestibule	3	266	2'x2' Troffer Recessed Flanged Metal Halide, (1) 250W lamp Prismatic Acrylic Diffuser	3	49	Recessed Flanged Chip On Board (COB) Type Screw-in / Bypass Existing Ballast Light Emitting Diode Lamp, Screw-in, (1) 54W lamp			8760	0.80	0.15	6,997	1,277	-	KEYSTONE KT-LED54HID-EX39-840-D	-	-
147	C Block Common	Main Vestibule	1	19	Universal Face Exit Sign; Black Surface Mounted Compact Fluorescent, twin, (2) 7W lamp (No Diffuser)	1	2	Surface Mounted Upgrade EXIT Sign LED Light Fixture. (1) 2W			8760	0.02	0.00	166	17	-	TCP 20716 RD LED PADDLE RETRO HARDWIRE	-	-
148	C Block Common	Office	2	43	4' Wraparound; Tamper-Proof Surface Mounted Fluorescent, (2) 48", Super T-8 lamp, Instant Start Ballast, NLO (BF: .85-.95) Prismatic Acrylic Diffuser	2	24	Surface Mounted T8 LED Retrofit Lamp with External Driver LED 4' T8 Lamp (2) 12W Lamps			3640	0.09	0.05	315	173	-	GE 34235 LEDT8/LC/G/4/840	GE 21378 LED/DR/D2L/LW	-
149	C Block Common	Custodial Supply	2	43	4' Wraparound; Tamper-Proof Surface Mounted Fluorescent, (2) 48", Super T-8 lamp, Instant Start Ballast, NLO (BF: .85-.95) Prismatic Acrylic Diffuser	2	24	Surface Mounted T8 LED Retrofit Lamp with External Driver LED 4' T8 Lamp (2) 12W Lamps			1560	0.09	0.05	135	74	-	GE 34235 LEDT8/LC/G/4/840	GE 21378 LED/DR/D2L/LW	-
150	C Block Common	Staff Restroom	1	43	4' Wraparound; Tamper-Proof Surface Mounted Fluorescent, (2) 48", Super T-8 lamp, Instant Start Ballast, NLO (BF: .85-.95) Prismatic Acrylic Diffuser	1	24	Surface Mounted T8 LED Retrofit Lamp with External Driver LED 4' T8 Lamp (2) 12W Lamps			1456	0.04	0.02	63	35	-	GE 34235 LEDT8/LC/G/4/840	GE 21378 LED/DR/D2L/LW	-
151	C Block Common	Custodial Closet	1	43	4' Wraparound; Tamper-Proof Surface Mounted Fluorescent, (2) 48", Super T-8 lamp, Instant Start Ballast, NLO (BF: .85-.95) Prismatic Acrylic Diffuser	1	24	Surface Mounted T8 LED Retrofit Lamp with External Driver LED 4' T8 Lamp (2) 12W Lamps			1456	0.04	0.02	63	35	-	GE 34235 LEDT8/LC/G/4/840	GE 21378 LED/DR/D2L/LW	-
152	C Block Common	Stairwell / Upper Open Office	1	43	4' Corner Mount Wall Vanity; Tamper-Proof Wall Mounted Fluorescent, (2) 48", Super T-8 lamp, Instant Start Ballast, NLO (BF: .85-.95) Prismatic Acrylic Diffuser	1	24	Wall Mounted T8 LED Retrofit Lamp with External Driver LED 4' T8 Lamp (2) 12W Lamps			3640	0.04	0.02	158	86	-	GE 34235 LEDT8/LC/G/4/840	GE 21378 LED/DR/D2L/LW	-
153	C Block Common	Stairwell / Upper Open Office	3	43	4' Wraparound; Tamper-Proof Surface Mounted Fluorescent, (2) 48", Super T-8 lamp, Instant Start Ballast, NLO (BF: .85-.95) Prismatic Acrylic Diffuser	3	24	Surface Mounted T8 LED Retrofit Lamp with External Driver LED 4' T8 Lamp (2) 12W Lamps			3640	0.13	0.07	473	259	-	GE 34235 LEDT8/LC/G/4/840	GE 21378 LED/DR/D2L/LW	-
154	C Block Common	Stairwell / Upper Open Office	12	65	2'x4' Troffer Recessed Flanged Fluorescent, (3) 48", Super T-8 lamp, Instant Start Ballast, NLO (BF: .85-.95) Deep Cell Parabolic Diffuser	12	36	Recessed Flanged T8 LED Retrofit Lamp with External Driver LED 4' T8 Lamp (3) 12W Lamps			3640	0.78	0.43	2,838	1,557	-	GE 34235 LEDT8/LC/G/4/840	GE 21379 LED/DR/D4L/LW	-
155	C Block Common	Stairwell / Upper Open Office	2	19	Universal Face Exit Sign; Black Surface Mounted Compact Fluorescent, twin, (2) 7W lamp (No Diffuser)	2	2	Surface Mounted Upgrade EXIT Sign LED Light Fixture. (1) 2W			8760	0.04	0.00	332	35	-	TCP 20716 RD LED PADDLE RETRO HARDWIRE	-	-

Line #	Facility Area	Space	Pre Fixture Qty	Pre Watts/ Fixt	Pre Description	Post Fixture Qty	Post Watt/ Fixt	Post Description	Wallswitch Sensor	Ceiling Sensor	Hours of Operation	Base kW	Proposed kW	Base kWh	Proposed kWh	Luminaire Part #	Lamp Part #	Driver Part#	Misc. Parts
156	C Block Common	Office	2	65	2'x4' Dimmable Recessed Troffer Recessed Flanged Fluorescent, (3) 48", Super T-8 lamp, Instant Start Ballast, NLO (BF: .85-.95) Deep Cell Parabolic Diffuser	2	36	Recessed Flanged T8 LED Retrofit Lamp with External Driver LED 4' T8 Lamp (3) 12W Lamps			3640	0.13	0.07	473	259	-	GE 34235 LEDT8/LC/G/4/840	GE 21379 LED/DR/D4L/LW	-
157	C Block Common	Office	4	65	2'x4' Troffer Recessed Flanged Fluorescent, (3) 48", Super T-8 lamp, Instant Start Ballast, NLO (BF: .85-.95) Prismatic Acrylic Diffuser	4	36	Recessed Flanged T8 LED Retrofit Lamp with External Driver LED 4' T8 Lamp (3) 12W Lamps			3640	0.26	0.14	946	519	-	GE 34235 LEDT8/LC/G/4/840	GE 21379 LED/DR/D4L/LW	-
158	C Block Common	Office	2	65	2'x4' Troffer Recessed Flanged Fluorescent, (3) 48", Super T-8 lamp, Instant Start Ballast, NLO (BF: .85-.95) Prismatic Acrylic Diffuser	2	36	Recessed Flanged T8 LED Retrofit Lamp with External Driver LED 4' T8 Lamp (3) 12W Lamps			3640	0.13	0.07	473	259	-	GE 34235 LEDT8/LC/G/4/840	GE 21379 LED/DR/D4L/LW	-
159	C Block Common	Office Supply Closet	1	65	2'x4' Troffer Recessed Flanged Fluorescent, (3) 48", Super T-8 lamp, Instant Start Ballast, NLO (BF: .85-.95) Prismatic Acrylic Diffuser	1	36	Recessed Flanged T8 LED Retrofit Lamp with External Driver LED 4' T8 Lamp (3) 12W Lamps			520	0.06	0.04	34	19	-	GE 34235 LEDT8/LC/G/4/840	GE 21379 LED/DR/D4L/LW	-
160	C Block Common	Pipe Chase	1	43	4' Industrial Chain Mounted Fluorescent, (2) 48", Super T-8 lamp, Instant Start Ballast, NLO (BF: .85-.95) (No Diffuser)	1	24	Chain Mounted T8 LED Retrofit Lamp with External Driver LED 4' T8 Lamp (2) 12W Lamps			200	0.04	0.02	9	5	-	GE 34235 LEDT8/LC/G/4/840	GE 21378 LED/DR/D2L/LW	-
161	C Block Common	Pipe Chase	1	43	4' Industrial Chain Mounted Fluorescent, (2) 48", Super T-8 lamp, Instant Start Ballast, NLO (BF: .85-.95) (No Diffuser)	1	24	Chain Mounted T8 LED Retrofit Lamp with External Driver LED 4' T8 Lamp (2) 12W Lamps			200	0.04	0.02	9	5	-	GE 34235 LEDT8/LC/G/4/840	GE 21378 LED/DR/D2L/LW	-
162	C Block Common	Back Stairwell	6	43	4' Wraparound; Tamper-Proof Surface Mounted Fluorescent, (2) 48", Super T-8 lamp, Instant Start Ballast, NLO (BF: .85-.95) Prismatic Acrylic Diffuser	6	24	Surface Mounted T8 LED Retrofit Lamp with External Driver LED 4' T8 Lamp (2) 12W Lamps			8760	0.26	0.14	2,277	1,249	-	GE 34235 LEDT8/LC/G/4/840	GE 21378 LED/DR/D2L/LW	-
163	C Block Common	Back Stairwell	1	19	Universal Face Exit Sign; Black Surface Mounted Compact Fluorescent, twin, (2) 7W lamp (No Diffuser)	1	2	Surface Mounted Upgrade EXIT Sign LED Light Fixture. (1) 2W			8760	0.02	0.00	166	17	-	TCP 20716 RD LED PADDLE RETRO HARDWIRE	-	-
164	C Block Common	A.003 Mechanical Equipment Room	13	43	4' Industrial Chain Mounted Fluorescent, (2) 48", Super T-8 lamp, Instant Start Ballast, NLO (BF: .85-.95) (No Diffuser)	13	24	Chain Mounted T8 LED Retrofit Lamp with External Driver LED 4' T8 Lamp (2) 12W Lamps			520	0.56	0.31	293	161	-	GE 34235 LEDT8/LC/G/4/840	GE 21378 LED/DR/D2L/LW	-
165	C Block Common	A.003 Mechanical Equipment Room	2	19	Universal Face Exit Sign; White Surface Mounted Compact Fluorescent, twin, (2) 7W lamp (No Diffuser)	2	3	Surface Mounted Universal Face Exit Sign; White LED Light Fixture. (1) 3W			8760	0.04	0.01	332	52	TCP 22743 RD LED EXIT BBU WH HOUSING	-	-	-
166	C Block Common	Outside Electrical	3	43	4' Industrial Chain Mounted Fluorescent, (2) 48", Super T-8 lamp, Instant Start Ballast, NLO (BF: .85-.95) (No Diffuser)	3	24	Chain Mounted T8 LED Retrofit Lamp with External Driver LED 4' T8 Lamp (2) 12W Lamps			520	0.13	0.07	68	37	-	GE 34235 LEDT8/LC/G/4/840	GE 21378 LED/DR/D2L/LW	-
167	C Block Common	A.002 Security Panel Closet	1	43	4' Wraparound; Tamper-Proof Surface Mounted Fluorescent, (2) 48", Super T-8 lamp, Instant Start Ballast, NLO (BF: .85-.95) Prismatic Acrylic Diffuser	1	24	Surface Mounted T8 LED Retrofit Lamp with External Driver LED 4' T8 Lamp (2) 12W Lamps			520	0.04	0.02	23	12	-	GE 34235 LEDT8/LC/G/4/840	GE 21378 LED/DR/D2L/LW	-
168	C Block A Side	C Block A Side Dayroom	6	266	2'x2' Troffer Recessed Metal Halide, (1) 250W lamp Prismatic Acrylic Diffuser	6	49	Recessed Chip On Board (COB) Type Screw-in / Bypass Existing Ballast Light Emitting Diode Lamp, Screw-in, (1) 54W lamp			5824	1.60	0.29	9,303	1,698	-	KEYSTONE KT-LED54HID-EX39-840-D	-	-
169	C Block A Side	B Block B Side Dayroom	16	266	2'x2' Troffer Recessed Flanged Metal Halide, (1) 250W lamp Prismatic Acrylic Diffuser	16	49	Recessed Flanged Chip On Board (COB) Type Screw-in / Bypass Existing Ballast Light Emitting Diode Lamp, Screw-in, (1) 54W lamp			5824	4.26	0.78	24,809	4,529	-	KEYSTONE KT-LED54HID-EX39-840-D	-	-
170	C Block A Side	C Block A Side Dayroom	7	43	4' Corner Mount Wall Vanity; Tamper-Proof Wall Mounted Fluorescent, (2) 48", Super T-8 lamp, Instant Start Ballast, NLO (BF: .85-.95) Prismatic Acrylic Diffuser	7	24	Wall Mounted T8 LED Retrofit Lamp with External Driver LED 4' T8 Lamp (2) 12W Lamps			5824	0.30	0.17	1,766	969	-	GE 34235 LEDT8/LC/G/4/840	GE 21378 LED/DR/D2L/LW	-
171	C Block A Side	B Block B Side Dayroom	1	43	4' Wraparound; Tamper-Proof Wall Mounted Fluorescent, (2) 48", Super T-8 lamp, Instant Start Ballast, NLO (BF: .85-.95) Prismatic Acrylic Diffuser	1	24	Wall Mounted T8 LED Retrofit Lamp with External Driver LED 4' T8 Lamp (2) 12W Lamps			5824	0.04	0.02	252	138	-	GE 34235 LEDT8/LC/G/4/840	GE 21378 LED/DR/D2L/LW	-
172	C Block A Side	B Block B Side Dayroom	3	19	Universal Face Exit Sign; Black Surface Mounted Compact Fluorescent, twin, (2) 7W lamp (No Diffuser)	3	2	Surface Mounted Upgrade EXIT Sign LED Light Fixture. (1) 2W			8760	0.06	0.01	498	52	-	TCP 20716 RD LED PADDLE RETRO HARDWIRE	-	-
173	C Block A Side	A1 Cell / Dorm	5	65	4' Wraparound; Tamper-Proof Surface Mounted Fluorescent, (3) 48", Super T-8 lamp, Instant Start Ballast, NLO (BF: .85-.95) Prismatic Acrylic Diffuser	5	36	Surface Mounted T8 LED Retrofit Lamp with External Driver LED 4' T8 Lamp (3) 12W Lamps			2912	0.32	0.18	946	519	-	GE 34235 LEDT8/LC/G/4/840	GE 21379 LED/DR/D4L/LW	-
174	C Block A Side	A2-A12 Cell	11	65	4' Wraparound; Tamper-Proof Surface Mounted Fluorescent, (3) 48", Super T-8 lamp, Instant Start Ballast, NLO (BF: .85-.95) Prismatic Acrylic Diffuser	11	36	Surface Mounted T8 LED Retrofit Lamp with External Driver LED 4' T8 Lamp (3) 12W Lamps			2912	0.71	0.39	2,081	1,142	-	GE 34235 LEDT8/LC/G/4/840	GE 21379 LED/DR/D4L/LW	-
175	C Block A Side	A13 Cell	1	65	4' Wraparound; Tamper-Proof Surface Mounted Fluorescent, (3) 48", Super T-8 lamp, Instant Start Ballast, NLO (BF: .85-.95) Prismatic Acrylic Diffuser	1	36	Surface Mounted T8 LED Retrofit Lamp with External Driver LED 4' T8 Lamp (3) 12W Lamps			2912	0.06	0.04	189	104	-	GE 34235 LEDT8/LC/G/4/840	GE 21379 LED/DR/D4L/LW	-
176	C Block A Side	B13 Cell	5	43	4' Wraparound; Tamper-Proof Surface Mounted Fluorescent, (2) 48", Super T-8 lamp, Instant Start Ballast, NLO (BF: .85-.95) Prismatic Acrylic Diffuser	5	24	Surface Mounted T8 LED Retrofit Lamp with External Driver LED 4' T8 Lamp (2) 12W Lamps			2912	0.22	0.12	631	346	-	GE 34235 LEDT8/LC/G/4/840	GE 21378 LED/DR/D2L/LW	-
177	C Block A Side	A14-A64	51	65	4' Wraparound; Tamper-Proof Surface Mounted Fluorescent, (3) 48", Super T-8 lamp, Instant Start Ballast, NLO (BF: .85-.95) Prismatic Acrylic Diffuser	51	36	Surface Mounted T8 LED Retrofit Lamp with External Driver LED 4' T8 Lamp (3) 12W Lamps			2912	3.31	1.82	9,650	5,293	-	GE 34235 LEDT8/LC/G/4/840	GE 21379 LED/DR/D4L/LW	-
178	C Block A Side	Supply Storage Room (between A24 and A25	1	87	4' Wraparound Recessed Fluorescent, (4) 48", Super T-8 lamp, Instant Start Ballast, NLO (BF: .85-.95) (No Diffuser)	1	48	Recessed T8 LED Retrofit Lamp with External Driver LED 4' T8 Lamp (4) 12W Lamps			200	0.09	0.05	17	10	-	GE 34235 LEDT8/LC/G/4/840	GE 21379 LED/DR/D4L/LW	-
179	C Block A Side	Upper Shower Area	7	30	2' Wraparound; Tamper-Proof Surface Mounted Fluorescent, (2) 24", T-8 lamp, Instant Start Ballast, NLO (BF: .85-.95) Prismatic Acrylic Diffuser	7	24	Surface Mounted 2' Wraparound; Tamper-Proof LED Light Fixture. (1) 24W			5824	0.21	0.17	1,214	969	COOPER FAILSAFE FVS8P-2-LD4-2LO-40-UNV-P125-EDC1-WL	-	-	-
180	C Block A Side	Lower Shower Area	6	30	2' Wraparound; Tamper-Proof Surface Mounted Fluorescent, (2) 24", T-8 lamp, Instant Start Ballast, NLO (BF: .85-.95) Prismatic Acrylic Diffuser	6	24	Surface Mounted 2' Wraparound; Tamper-Proof LED Light Fixture. (1) 24W			5824	0.18	0.14	1,041	830	COOPER FAILSAFE FVS8P-2-LD4-2LO-40-UNV-P125-EDC1-WL	-	-	-
181	C Block A Side	Lower Shower Area	1	43	4' Wraparound; Tamper-Proof Surface Mounted Fluorescent, (2) 48", Super T-8 lamp, Instant Start Ballast, NLO (BF: .85-.95) Prismatic Acrylic Diffuser	1	46	Surface Mounted 4' Wraparound; Tamper-Proof LED Light Fixture. (1) 46W			5824	0.04	0.05	252	265	COOPER FAILSAFE FVS8P-4-LD4-2LO-40-UNV-P125-EDC1-WL	-	-	-
182	C Block A Side	Lower Shower Area	2	65	4' Wraparound; Tamper-Proof Surface Mounted Fluorescent, (3) 48", Super T-8 lamp, Instant Start Ballast, NLO (BF: .85-.95) Prismatic Acrylic Diffuser	2	36	Surface Mounted T8 LED Retrofit Lamp with External Driver LED 4' T8 Lamp (3) 12W Lamps			5824	0.13	0.07	757	415	-	GE 34235 LEDT8/LC/G/4/840	GE 21379 LED/DR/D4L/LW	-
183	C Block A Side	Ice Machine Area	1	43	4' Wraparound; Tamper-Proof Surface Mounted Fluorescent, (2) 48", Super T-8 lamp, Instant Start Ballast, NLO (BF: .85-.95) Prismatic Acrylic Diffuser	1	24	Surface Mounted T8 LED Retrofit Lamp with External Driver LED 4' T8 Lamp (2) 12W Lamps			5824	0.04	0.02	252	138	-	GE 34235 LEDT8/LC/G/4/840	GE 21378 LED/DR/D2L/LW	-
184	C Block A Side	Inmate Restroom	1	43	4' Wraparound; Tamper-Proof Surface Mounted Fluorescent, (2) 48", Super T-8 lamp, Instant Start Ballast, NLO (BF: .85-.95) Prismatic Acrylic Diffuser	1	24	Surface Mounted T8 LED Retrofit Lamp with External Driver LED 4' T8 Lamp (2) 12W Lamps			1456	0.04	0.02	63	35	-	GE 34235 LEDT8/LC/G/4/840	GE 21378 LED/DR/D2L/LW	-
185	C Block A Side	Custodial Supply	1	30	2' Wraparound; Tamper-Proof Surface Mounted Fluorescent, (2) 24", T-8 lamp, Instant Start Ballast, NLO (BF: .85-.95) Prismatic Acrylic Diffuser	1	16	Surface Mounted T8 LED Retrofit Lamp with External Driver LED 2' T8 Lamp (2) 8W Lamps			1560	0.03	0.02	46	25	-	GE 36409 LEDT8/LC/G/2/840	GE 21378 LED/DR/D2L/LW	-
186	C Block A Side	Custodial Supply	2	43	4' Wraparound; Tamper-Proof Surface Mounted Fluorescent, (2) 48", Super T-8 lamp, Instant Start Ballast, NLO (BF: .85-.95) Prismatic Acrylic Diffuser	2	24	Surface Mounted T8 LED Retrofit Lamp with External Driver LED 4' T8 Lamp (2) 12W Lamps			1560	0.09	0.05	135	74	-	GE 34235 LEDT8/LC/G/4/840	GE 21378 LED/DR/D2L/LW	-
187	C Block A Side	Custodial Supply	3	43	4' Industrial Surface Mounted Fluorescent, (2) 48", Super T-8 lamp, Instant Start Ballast, NLO (BF: .85-.95) (No Diffuser)	3	24	Surface Mounted T8 LED Retrofit Lamp with External Driver LED 4' T8 Lamp (2) 12W Lamps			1560	0.13	0.07	203	111	-	GE 34235 LEDT8/LC/G/4/840	GE 21378 LED/DR/D2L/LW	-
188	C Block A Side	Pipe Chase	1	43	4' Industrial Surface Mounted Fluorescent, (2) 48", Super T-8 lamp, Instant Start Ballast, NLO (BF: .85-.95) (No Diffuser)	1	24	Surface Mounted T8 LED Retrofit Lamp with External Driver LED 4' T8 Lamp (2) 12W Lamps			200	0.04	0.02	9	5	-	GE 34235 LEDT8/LC/G/4/840	GE 21378 LED/DR/D2L/LW	-
189	C Block A Side	C block A Side Stairwell	2	43	4' Wraparound; Tamper-Proof Surface Mounted Fluorescent, (2) 48", Super T-8 lamp, Instant Start Ballast, NLO (BF: .85-.95) Prismatic Acrylic Diffuser	2	24	Surface Mounted T8 LED Retrofit Lamp with External Driver LED 4' T8 Lamp (2) 12W Lamps			8760	0.09	0.05	759	416	-	GE 34235 LEDT8/LC/G/4/840	GE 21378 LED/DR/D2L/LW	-
190	C Block A Side	B block B Side Stairwell	2	43	4' Wraparound; Tamper-Proof Wall Mounted Fluorescent, (2) 48", Super T-8 lamp, Instant Start Ballast, NLO (BF: .85-.95) Prismatic Acrylic Diffuser	2	24	Wall Mounted T8 LED Retrofit Lamp with External Driver LED 4' T8 Lamp (2) 12W Lamps			8760	0.09	0.05	759	416	-	GE 34235 LEDT8/LC/G/4/840	GE 21378 LED/DR/D2L/LW	-
191	C Block A Side	B block B Side Stairwell	1	3	Universal Face Exit Sign; Black Surface Mounted EXIT C172Light Emitting Diode, (2) 1.5W lamp, Dual Sided (No Diffuser)	1	3	Existing luminaire to remain as is No Retrofit. To remain as is.			8760	0.00	0.00	25	25	-	-	-	-
192	C Block A Side	C block A Side Stairwell	2	43	4' Wraparound; Tamper-Proof Wall Mounted Fluorescent, (2) 48", Super T-8 lamp, Instant Start Ballast, NLO (BF: .85-.95) Prismatic Acrylic Diffuser	2	24	Wall Mounted T8 LED Retrofit Lamp with External Driver LED 4' T8 Lamp (2) 12W Lamps			8760	0.09	0.05	759	416	-	GE 34235 LEDT8/LC/G/4/840	GE 21378 LED/DR/D2L/LW	-
193	C Block A Side	C block A Side Stairwell	1	19	Universal Face Exit Sign; Black Surface Mounted Compact Fluorescent, twin, (2) 7W lamp (No Diffuser)	1	2	Surface Mounted Upgrade EXIT Sign LED Light Fixture. (1) 2W			8760	0.02	0.00	166	17	-	TCP 20716 RD LED PADDLE RETRO HARDWIRE	-	-
194	C Block B Side	C Block B Side Dayroom	6	266	2'x2' Troffer Recessed Metal Halide, (1) 250W lamp Prismatic Acrylic Diffuser	6	49	Recessed Chip On Board (COB) Type Screw-in / Bypass Existing Ballast Light Emitting Diode Lamp, Screw-in, (1) 54W lamp			5824	1.60	0.29	9,303	1,698	-	KEYSTONE KT-LED54HID-EX39-840-D	-	-

Line #	Facility Area	Space	Pre Fixture Qty	Pre Watts/ Fixt	Pre Description	Post Fixture Qty	Post Watt/ Fixt	Post Description	Wallswitch Sensor	Ceiling Sensor	Hours of Operation	Base kW	Proposed kW	Base kWh	Proposed kWh	Luminaire Part #	Lamp Part #	Driver Part#	Misc. Parts
195	C Block B Side	C Block B Side Dayroom	16	266	2'x2' Troffer Recessed Flanged Metal Halide, (1) 250W lamp Prismatic Acrylic Diffuser	16	49	Recessed Flanged Chip On Board (COB) Type Screw-in / Bypass Existing Ballast Light Emitting Diode Lamp, Screw-in, (1) 54W lamp			5824	4.26	0.78	24,809	4,529	-	KEYSTONE KT-LED54HID-EX39-840-D	-	-
196	C Block B Side	C Block B Side Dayroom	7	43	4' Corner Mount Wall Vanity; Tamper-Proof Wall Mounted Fluorescent, (2) 48", Super T-8 lamp, Instant Start Ballast, NLO (BF: .85-.95) Prismatic Acrylic Diffuser	7	24	Wall Mounted T8 LED Retrofit Lamp with External Driver LED 4' T8 Lamp (2) 12W Lamps			5824	0.30	0.17	1,766	969	-	GE 34235 LEDT8/LC/G/4/840	GE 21378 LED/DR/D2L/LW	-
197	C Block B Side	C Block B Side Dayroom	1	43	4' Wraparound; Tamper-Proof Wall Mounted Fluorescent, (2) 48", Super T-8 lamp, Instant Start Ballast, NLO (BF: .85-.95) Prismatic Acrylic Diffuser	1	24	Wall Mounted T8 LED Retrofit Lamp with External Driver LED 4' T8 Lamp (2) 12W Lamps			5824	0.04	0.02	252	138	-	GE 34235 LEDT8/LC/G/4/840	GE 21378 LED/DR/D2L/LW	-
198	C Block B Side	C Block B Side Dayroom	3	19	Universal Face Exit Sign; Black Surface Mounted Compact Fluorescent, twin, (2) 7W lamp (No Diffuser)	3	2	Surface Mounted Upgrade EXIT Sign LED Light Fixture. (1) 2W			8760	0.06	0.01	498	52	-	TCP 20716 RD LED PADDLE RETRO HARDWIRE	-	-
199	C Block B Side	B1 Cell / Dorm	5	65	4' Wraparound; Tamper-Proof Surface Mounted Fluorescent, (3) 48", Super T-8 lamp, Instant Start Ballast, NLO (BF: .85-.95) Prismatic Acrylic Diffuser	5	36	Surface Mounted T8 LED Retrofit Lamp with External Driver LED 4' T8 Lamp (3) 12W Lamps			2912	0.32	0.18	946	519	-	GE 34235 LEDT8/LC/G/4/840	GE 21379 LED/DR/D4L/LW	-
200	C Block B Side	B2-B12 Cell	11	65	4' Wraparound; Tamper-Proof Surface Mounted Fluorescent, (3) 48", Super T-8 lamp, Instant Start Ballast, NLO (BF: .85-.95) Prismatic Acrylic Diffuser	11	36	Surface Mounted T8 LED Retrofit Lamp with External Driver LED 4' T8 Lamp (3) 12W Lamps			2912	0.71	0.39	2,081	1,142	-	GE 34235 LEDT8/LC/G/4/840	GE 21379 LED/DR/D4L/LW	-
201	C Block B Side	B13 Cell	1	65	4' Wraparound; Tamper-Proof Surface Mounted Fluorescent, (3) 48", Super T-8 lamp, Instant Start Ballast, NLO (BF: .85-.95) Prismatic Acrylic Diffuser	1	36	Surface Mounted T8 LED Retrofit Lamp with External Driver LED 4' T8 Lamp (3) 12W Lamps			2912	0.06	0.04	189	104	-	GE 34235 LEDT8/LC/G/4/840	GE 21379 LED/DR/D4L/LW	-
202	C Block B Side	B13 Cell	5	43	4' Wraparound; Tamper-Proof Surface Mounted Fluorescent, (2) 48", Super T-8 lamp, Instant Start Ballast, NLO (BF: .85-.95) Prismatic Acrylic Diffuser	5	24	Surface Mounted T8 LED Retrofit Lamp with External Driver LED 4' T8 Lamp (2) 12W Lamps			2912	0.22	0.12	631	346	-	GE 34235 LEDT8/LC/G/4/840	GE 21378 LED/DR/D2L/LW	-
203	C Block B Side	B14-B64	51	65	4' Wraparound; Tamper-Proof Surface Mounted Fluorescent, (3) 48", Super T-8 lamp, Instant Start Ballast, NLO (BF: .85-.95) Prismatic Acrylic Diffuser	51	36	Surface Mounted T8 LED Retrofit Lamp with External Driver LED 4' T8 Lamp (3) 12W Lamps			2912	3.31	1.82	9,650	5,293	-	GE 34235 LEDT8/LC/G/4/840	GE 21379 LED/DR/D4L/LW	-
204	C Block B Side	Supply Storage Room (between A24 and A25	1	87	4' Wraparound Recessed Fluorescent, (4) 48", Super T-8 lamp, Instant Start Ballast, NLO (BF: .85-.95) (No Diffuser)	1	48	Recessed T8 LED Retrofit Lamp with External Driver LED 4' T8 Lamp (4) 12W Lamps			200	0.09	0.05	17	10	-	GE 34235 LEDT8/LC/G/4/840	GE 21379 LED/DR/D4L/LW	-
205	C Block B Side	Upper Shower Area	7	30	2' Wraparound; Tamper-Proof Surface Mounted Fluorescent, (2) 24", T-8 lamp, Instant Start Ballast, NLO (BF: .85-.95) Prismatic Acrylic Diffuser	7	24	Surface Mounted 2' Wraparound; Tamper-Proof LED Light Fixture. (1) 24W			5824	0.21	0.17	1,214	969	COOPER FAILSAFE FVS8P-2-LD4-2LO-40-UNV-P125-EDC1-WL	-	-	-
206	C Block B Side	Lower Shower Area	6	30	2' Wraparound; Tamper-Proof Surface Mounted Fluorescent, (2) 24", T-8 lamp, Instant Start Ballast, NLO (BF: .85-.95) Prismatic Acrylic Diffuser	6	24	Surface Mounted 2' Wraparound; Tamper-Proof LED Light Fixture. (1) 24W			5824	0.18	0.14	1,041	830	COOPER FAILSAFE FVS8P-2-LD4-2LO-40-UNV-P125-EDC1-WL	-	-	-
207	C Block B Side	Lower Shower Area	1	43	4' Wraparound; Tamper-Proof Surface Mounted Fluorescent, (2) 48", Super T-8 lamp, Instant Start Ballast, NLO (BF: .85-.95) Prismatic Acrylic Diffuser	1	46	Surface Mounted 4' Wraparound; Tamper-Proof LED Light Fixture. (1) 46W			5824	0.04	0.05	252	265	COOPER FAILSAFE FVS8P-4-LD4-2LO-40-UNV-P125-EDC1-WL	-	-	-
208	C Block B Side	Lower Shower Area	2	65	4' Wraparound; Tamper-Proof Surface Mounted Fluorescent, (3) 48", Super T-8 lamp, Instant Start Ballast, NLO (BF: .85-.95) Prismatic Acrylic Diffuser	2	36	Surface Mounted T8 LED Retrofit Lamp with External Driver LED 4' T8 Lamp (3) 12W Lamps			5824	0.13	0.07	757	415	-	GE 34235 LEDT8/LC/G/4/840	GE 21379 LED/DR/D4L/LW	-
209	C Block B Side	Ice Machine Area	1	43	4' Wraparound; Tamper-Proof Surface Mounted Fluorescent, (2) 48", Super T-8 lamp, Instant Start Ballast, NLO (BF: .85-.95) Prismatic Acrylic Diffuser	1	24	Surface Mounted T8 LED Retrofit Lamp with External Driver LED 4' T8 Lamp (2) 12W Lamps			5824	0.04	0.02	252	138	-	GE 34235 LEDT8/LC/G/4/840	GE 21378 LED/DR/D2L/LW	-
210	C Block B Side	Inmate Restroom	1	43	4' Wraparound; Tamper-Proof Surface Mounted Fluorescent, (2) 48", Super T-8 lamp, Instant Start Ballast, NLO (BF: .85-.95) Prismatic Acrylic Diffuser	1	24	Surface Mounted T8 LED Retrofit Lamp with External Driver LED 4' T8 Lamp (2) 12W Lamps			1456	0.04	0.02	63	35	-	GE 34235 LEDT8/LC/G/4/840	GE 21378 LED/DR/D2L/LW	-
211	C Block B Side	Custodial Supply	1	30	2' Wraparound; Tamper-Proof Surface Mounted Fluorescent, (2) 24", T-8 lamp, Instant Start Ballast, NLO (BF: .85-.95) Prismatic Acrylic Diffuser	1	16	Surface Mounted T8 LED Retrofit Lamp with External Driver LED 2' T8 Lamp (2) 8W Lamps			1560	0.03	0.02	46	25	-	GE 36409 LEDT8/LC/G/2/840	GE 21378 LED/DR/D2L/LW	-
212	C Block B Side	Custodial Supply	2	43	4' Wraparound; Tamper-Proof Surface Mounted Fluorescent, (2) 48", Super T-8 lamp, Instant Start Ballast, NLO (BF: .85-.95) Prismatic Acrylic Diffuser	2	24	Surface Mounted T8 LED Retrofit Lamp with External Driver LED 4' T8 Lamp (2) 12W Lamps			1560	0.09	0.05	135	74	-	GE 34235 LEDT8/LC/G/4/840	GE 21378 LED/DR/D2L/LW	-
213	C Block B Side	Custodial Supply	3	43	4' Industrial Surface Mounted Fluorescent, (2) 48", Super T-8 lamp, Instant Start Ballast, NLO (BF: .85-.95) (No Diffuser)	3	24	Surface Mounted T8 LED Retrofit Lamp with External Driver LED 4' T8 Lamp (2) 12W Lamps			1560	0.13	0.07	203	111	-	GE 34235 LEDT8/LC/G/4/840	GE 21378 LED/DR/D2L/LW	-
214	C Block B Side	Pipe Chase	1	43	4' Industrial Surface Mounted Fluorescent, (2) 48", Super T-8 lamp, Instant Start Ballast, NLO (BF: .85-.95) (No Diffuser)	1	24	Surface Mounted T8 LED Retrofit Lamp with External Driver LED 4' T8 Lamp (2) 12W Lamps			200	0.04	0.02	9	5	-	GE 34235 LEDT8/LC/G/4/840	GE 21378 LED/DR/D2L/LW	-
215	C Block B Side	C block B Side Stairwell	2	43	4' Wraparound; Tamper-Proof Surface Mounted Fluorescent, (2) 48", Super T-8 lamp, Instant Start Ballast, NLO (BF: .85-.95) Prismatic Acrylic Diffuser	2	24	Surface Mounted T8 LED Retrofit Lamp with External Driver LED 4' T8 Lamp (2) 12W Lamps			8760	0.09	0.05	759	416	-	GE 34235 LEDT8/LC/G/4/840	GE 21378 LED/DR/D2L/LW	-
216	C Block B Side	C block B Side Stairwell	2	43	4' Wraparound; Tamper-Proof Wall Mounted Fluorescent, (2) 48", Super T-8 lamp, Instant Start Ballast, NLO (BF: .85-.95) Prismatic Acrylic Diffuser	2	24	Wall Mounted T8 LED Retrofit Lamp with External Driver LED 4' T8 Lamp (2) 12W Lamps			8760	0.09	0.05	759	416	-	GE 34235 LEDT8/LC/G/4/840	GE 21378 LED/DR/D2L/LW	-
217	C Block B Side	C block B Side Stairwell	1	3	Universal Face Exit Sign; Black Surface Mounted EXIT C172Light Emitting Diode, (2) 1.5W lamp, Dual Sided (No Diffuser)	1	3	Existing luminaire to remain as is No Retrofit. To remain as is.			8760	0.00	0.00	25	25	-	-	-	-
218	D Block Common	D Block Main Entry	1	43	4' Wraparound; Tamper-Proof Surface Mounted Fluorescent, (2) 48", Super T-8 lamp, Instant Start Ballast, NLO (BF: .85-.95) Prismatic Acrylic Diffuser	1	24	Surface Mounted T8 LED Retrofit Lamp with External Driver LED 4' T8 Lamp (2) 12W Lamps			8760	0.04	0.02	379	208	-	GE 34235 LEDT8/LC/G/4/840	GE 21378 LED/DR/D2L/LW	-
219	D Block Common	Main Vestibule	3	266	2'x2' Troffer Recessed Flanged Metal Halide, (1) 250W lamp Prismatic Acrylic Diffuser	3	49	Recessed Flanged Chip On Board (COB) Type Screw-in / Bypass Existing Ballast Light Emitting Diode Lamp, Screw-in, (1) 54W lamp			8760	0.80	0.15	6,997	1,277	-	KEYSTONE KT-LED54HID-EX39-840-D	-	-
220	D Block Common	Main Vestibule	1	19	Universal Face Exit Sign; Black Surface Mounted Compact Fluorescent, twin, (2) 7W lamp (No Diffuser)	1	2	Surface Mounted Upgrade EXIT Sign LED Light Fixture. (1) 2W			8760	0.02	0.00	166	17	-	TCP 20716 RD LED PADDLE RETRO HARDWIRE	-	-
221	D Block Common	Office	2	43	4' Wraparound; Tamper-Proof Surface Mounted Fluorescent, (2) 48", Super T-8 lamp, Instant Start Ballast, NLO (BF: .85-.95) Prismatic Acrylic Diffuser	2	24	Surface Mounted T8 LED Retrofit Lamp with External Driver LED 4' T8 Lamp (2) 12W Lamps			3640	0.09	0.05	315	173	-	GE 34235 LEDT8/LC/G/4/840	GE 21378 LED/DR/D2L/LW	-
222	D Block Common	Custodial Supply	2	43	4' Wraparound; Tamper-Proof Surface Mounted Fluorescent, (2) 48", Super T-8 lamp, Instant Start Ballast, NLO (BF: .85-.95) Prismatic Acrylic Diffuser	2	24	Surface Mounted T8 LED Retrofit Lamp with External Driver LED 4' T8 Lamp (2) 12W Lamps			1560	0.09	0.05	135	74	-	GE 34235 LEDT8/LC/G/4/840	GE 21378 LED/DR/D2L/LW	-
223	D Block Common	Staff Restroom	1	43	4' Wraparound; Tamper-Proof Surface Mounted Fluorescent, (2) 48", Super T-8 lamp, Instant Start Ballast, NLO (BF: .85-.95) Prismatic Acrylic Diffuser	1	24	Surface Mounted T8 LED Retrofit Lamp with External Driver LED 4' T8 Lamp (2) 12W Lamps			1456	0.04	0.02	63	35	-	GE 34235 LEDT8/LC/G/4/840	GE 21378 LED/DR/D2L/LW	-
224	D Block Common	Custodial Closet	1	43	4' Wraparound; Tamper-Proof Surface Mounted Fluorescent, (2) 48", Super T-8 lamp, Instant Start Ballast, NLO (BF: .85-.95) Prismatic Acrylic Diffuser	1	24	Surface Mounted T8 LED Retrofit Lamp with External Driver LED 4' T8 Lamp (2) 12W Lamps			1456	0.04	0.02	63	35	-	GE 34235 LEDT8/LC/G/4/840	GE 21378 LED/DR/D2L/LW	-
225	D Block Common	Stairwell / Upper Open Office	1	43	4' Corner Mount Wall Vanity; Tamper-Proof Wall Mounted Fluorescent, (2) 48", Super T-8 lamp, Instant Start Ballast, NLO (BF: .85-.95) Prismatic Acrylic Diffuser	1	24	Wall Mounted T8 LED Retrofit Lamp with External Driver LED 4' T8 Lamp (2) 12W Lamps			3640	0.04	0.02	158	86	-	GE 34235 LEDT8/LC/G/4/840	GE 21378 LED/DR/D2L/LW	-
226	D Block Common	Stairwell / Upper Open Office	3	43	4' Wraparound; Tamper-Proof Surface Mounted Fluorescent, (2) 48", Super T-8 lamp, Instant Start Ballast, NLO (BF: .85-.95) Prismatic Acrylic Diffuser	3	24	Surface Mounted T8 LED Retrofit Lamp with External Driver LED 4' T8 Lamp (2) 12W Lamps			3640	0.13	0.07	473	259	-	GE 34235 LEDT8/LC/G/4/840	GE 21378 LED/DR/D2L/LW	-
227	D Block Common	Stairwell / Upper Open Office	12	65	2'x4' Troffer Recessed Flanged Fluorescent, (3) 48", Super T-8 lamp, Instant Start Ballast, NLO (BF: .85-.95) Deep Cell Parabolic Diffuser	12	36	Recessed Flanged T8 LED Retrofit Lamp with External Driver LED 4' T8 Lamp (3) 12W Lamps			3640	0.78	0.43	2,838	1,557	-	GE 34235 LEDT8/LC/G/4/840	GE 21379 LED/DR/D4L/LW	-
228	D Block Common	Stairwell / Upper Open Office	2	19	Universal Face Exit Sign; Black Surface Mounted Compact Fluorescent, twin, (2) 7W lamp (No Diffuser)	2	2	Surface Mounted Upgrade EXIT Sign LED Light Fixture. (1) 2W			8760	0.04	0.00	332	35	-	TCP 20716 RD LED PADDLE RETRO HARDWIRE	-	-
229	D Block Common	Office	2	65	2'x4' Dimmable Recessed Troffer Recessed Flanged Fluorescent, (3) 48", Super T-8 lamp, Instant Start Ballast, NLO (BF: .85-.95) Deep Cell Parabolic Diffuser	2	36	Recessed Flanged T8 LED Retrofit Lamp with External Driver LED 4' T8 Lamp (3) 12W Lamps			3640	0.13	0.07	473	259	-	GE 34235 LEDT8/LC/G/4/840	GE 21379 LED/DR/D4L/LW	-
230	D Block Common	Office	4	65	2'x4' Troffer Recessed Flanged Fluorescent, (3) 48", Super T-8 lamp, Instant Start Ballast, NLO (BF: .85-.95) Prismatic Acrylic Diffuser	4	36	Recessed Flanged T8 LED Retrofit Lamp with External Driver LED 4' T8 Lamp (3) 12W Lamps			3640	0.26	0.14	946	519	-	GE 34235 LEDT8/LC/G/4/840	GE 21379 LED/DR/D4L/LW	-
231	D Block Common	Office	2	65	2'x4' Troffer Recessed Flanged Fluorescent, (3) 48", Super T-8 lamp, Instant Start Ballast, NLO (BF: .85-.95) Prismatic Acrylic Diffuser	2	36	Recessed Flanged T8 LED Retrofit Lamp with External Driver LED 4' T8 Lamp (3) 12W Lamps			3640	0.13	0.07	473	259	-	GE 34235 LEDT8/LC/G/4/840	GE 21379 LED/DR/D4L/LW	-
232	D Block Common	Office Supply Closet	1	65	2'x4' Troffer Recessed Flanged Fluorescent, (3) 48", Super T-8 lamp, Instant Start Ballast, NLO (BF: .85-.95) Prismatic Acrylic Diffuser	1	36	Recessed Flanged T8 LED Retrofit Lamp with External Driver LED 4' T8 Lamp (3) 12W Lamps			520	0.06	0.04	34	19	-	GE 34235 LEDT8/LC/G/4/840	GE 21379 LED/DR/D4L/LW	-
233	D Block Common	Pipe Chase	1	43	4' Industrial Chain Mounted Fluorescent, (2) 48", Super T-8 lamp, Instant Start Ballast, NLO (BF: .85-.95) (No Diffuser)	1	24	Chain Mounted T8 LED Retrofit Lamp with External Driver LED 4' T8 Lamp (2) 12W Lamps			200	0.04	0.02	9	5	-	GE 34235 LEDT8/LC/G/4/840	GE 21378 LED/DR/D2L/LW	-

Line #	Facility Area	Space	Pre Fixture Qty	Pre Watts/ Fixt	Pre Description	Post Fixture Qty	Post Watt/ Fixt	Post Description	Wallswitch Sensor	Ceiling Sensor	Hours of Operation	Base kW	Proposed kW	Base kWh	Proposed kWh	Luminaire Part #	Lamp Part #	Driver Part#	Misc. Parts
234	D Block Common	Pipe Chase	1	43	4' Industrial Chain Mounted Fluorescent, (2) 48", Super T-8 lamp, Instant Start Ballast, NLO (BF: .85-.95) (No Diffuser)	1	24	Chain Mounted T8 LED Retrofit Lamp with External Driver LED 4' T8 Lamp (2) 12W Lamps			200	0.04	0.02	9	5	-	GE 34235 LEDT8/LC/G/4/840	GE 21378 LED/DR/D2L/LW	-
235	D Block Common	Back Stairwell	6	43	4' Wraparound; Tamper-Proof Surface Mounted Fluorescent, (2) 48", Super T-8 lamp, Instant Start Ballast, NLO (BF: .85-.95) Prismatic Acrylic Diffuser	6	24	Surface Mounted T8 LED Retrofit Lamp with External Driver LED 4' T8 Lamp (2) 12W Lamps			8760	0.26	0.14	2,277	1,249	-	GE 34235 LEDT8/LC/G/4/840	GE 21378 LED/DR/D2L/LW	-
236	D Block Common	Back Stairwell	1	19	Universal Face Exit Sign; Black Surface Mounted Compact Fluorescent, twin, (2) 7W lamp (No Diffuser)	1	2	Surface Mounted Upgrade EXIT Sign LED Light Fixture. (1) 2W			8760	0.02	0.00	166	17	-	TCP 20716 RD LED PADDLE RETRO HARDWIRE	-	-
237	D Block Common	A.003 Mechanical Equipment Room	13	43	4' Industrial Chain Mounted Fluorescent, (2) 48", Super T-8 lamp, Instant Start Ballast, NLO (BF: .85-.95) (No Diffuser)	13	24	Chain Mounted T8 LED Retrofit Lamp with External Driver LED 4' T8 Lamp (2) 12W Lamps			520	0.56	0.31	293	161	-	GE 34235 LEDT8/LC/G/4/840	GE 21378 LED/DR/D2L/LW	-
238	D Block Common	A.003 Mechanical Equipment Room	2	19	Universal Face Exit Sign; White Surface Mounted Compact Fluorescent, twin, (2) 7W lamp (No Diffuser)	2	3	Surface Mounted Universal Face Exit Sign; White LED Light Fixture. (1) 3W			8760	0.04	0.01	332	52	TCP 22743 RD LED EXIT BBU WH HOUSING	-	-	-
239	D Block Common	Outside Electrical	3	43	4' Industrial Chain Mounted Fluorescent, (2) 48", Super T-8 lamp, Instant Start Ballast, NLO (BF: .85-.95) (No Diffuser)	3	24	Chain Mounted T8 LED Retrofit Lamp with External Driver LED 4' T8 Lamp (2) 12W Lamps			520	0.13	0.07	68	37	-	GE 34235 LEDT8/LC/G/4/840	GE 21378 LED/DR/D2L/LW	-
240	D Block Common	A.002 Security Panel Closet	1	43	4' Wraparound; Tamper-Proof Surface Mounted Fluorescent, (2) 48", Super T-8 lamp, Instant Start Ballast, NLO (BF: .85-.95) Prismatic Acrylic Diffuser	1	24	Surface Mounted T8 LED Retrofit Lamp with External Driver LED 4' T8 Lamp (2) 12W Lamps			520	0.04	0.02	23	12	-	GE 34235 LEDT8/LC/G/4/840	GE 21378 LED/DR/D2L/LW	-
241	D Block A Side	D Block A Side Dayroom	6	266	2'x2' Troffer Recessed Metal Halide, (1) 250W lamp Prismatic Acrylic Diffuser	6	49	Recessed Chip On Board (COB) Type Screw-in / Bypass Existing Ballast Light Emitting Diode Lamp, Screw-in, (1) 54W lamp			5824	1.60	0.29	9,303	1,698	-	KEYSTONE KT-LED54HID-EX39-840-D	-	-
242	D Block A Side	C Block B Side Dayroom	16	266	2'x2' Troffer Recessed Flanged Metal Halide, (1) 250W lamp Prismatic Acrylic Diffuser	16	49	Recessed Flanged Chip On Board (COB) Type Screw-in / Bypass Existing Ballast Light Emitting Diode Lamp, Screw-in, (1) 54W lamp			5824	4.26	0.78	24,809	4,529	-	KEYSTONE KT-LED54HID-EX39-840-D	-	-
243	D Block A Side	D Block A Side Dayroom	7	43	4' Corner Mount Wall Vanity; Tamper-Proof Wall Mounted Fluorescent, (2) 48", Super T-8 lamp, Instant Start Ballast, NLO (BF: .85-.95) Prismatic Acrylic Diffuser	7	24	Wall Mounted T8 LED Retrofit Lamp with External Driver LED 4' T8 Lamp (2) 12W Lamps			5824	0.30	0.17	1,766	969	-	GE 34235 LEDT8/LC/G/4/840	GE 21378 LED/DR/D2L/LW	-
244	D Block A Side	C Block B Side Dayroom	1	43	4' Wraparound; Tamper-Proof Wall Mounted Fluorescent, (2) 48", Super T-8 lamp, Instant Start Ballast, NLO (BF: .85-.95) Prismatic Acrylic Diffuser	1	24	Wall Mounted T8 LED Retrofit Lamp with External Driver LED 4' T8 Lamp (2) 12W Lamps			5824	0.04	0.02	252	138	-	GE 34235 LEDT8/LC/G/4/840	GE 21378 LED/DR/D2L/LW	-
245	D Block A Side	C Block B Side Dayroom	3	19	Universal Face Exit Sign; Black Surface Mounted Compact Fluorescent, twin, (2) 7W lamp (No Diffuser)	3	2	Surface Mounted Upgrade EXIT Sign LED Light Fixture. (1) 2W			8760	0.06	0.01	498	52	-	TCP 20716 RD LED PADDLE RETRO HARDWIRE	-	-
246	D Block A Side	A1 Cell / Dorm	5	65	4' Wraparound; Tamper-Proof Surface Mounted Fluorescent, (3) 48", Super T-8 lamp, Instant Start Ballast, NLO (BF: .85-.95) Prismatic Acrylic Diffuser	5	36	Surface Mounted T8 LED Retrofit Lamp with External Driver LED 4' T8 Lamp (3) 12W Lamps			2912	0.32	0.18	946	519	-	GE 34235 LEDT8/LC/G/4/840	GE 21379 LED/DR/D4L/LW	-
247	D Block A Side	A2-A12 Cell	11	65	4' Wraparound; Tamper-Proof Surface Mounted Fluorescent, (3) 48", Super T-8 lamp, Instant Start Ballast, NLO (BF: .85-.95) Prismatic Acrylic Diffuser	11	36	Surface Mounted T8 LED Retrofit Lamp with External Driver LED 4' T8 Lamp (3) 12W Lamps			2912	0.71	0.39	2,081	1,142	-	GE 34235 LEDT8/LC/G/4/840	GE 21379 LED/DR/D4L/LW	-
248	D Block A Side	A13 Cell	1	65	4' Wraparound; Tamper-Proof Surface Mounted Fluorescent, (3) 48", Super T-8 lamp, Instant Start Ballast, NLO (BF: .85-.95) Prismatic Acrylic Diffuser	1	36	Surface Mounted T8 LED Retrofit Lamp with External Driver LED 4' T8 Lamp (3) 12W Lamps			2912	0.06	0.04	189	104	-	GE 34235 LEDT8/LC/G/4/840	GE 21379 LED/DR/D4L/LW	-
249	D Block A Side	B13 Cell	5	43	4' Wraparound; Tamper-Proof Surface Mounted Fluorescent, (2) 48", Super T-8 lamp, Instant Start Ballast, NLO (BF: .85-.95) Prismatic Acrylic Diffuser	5	24	Surface Mounted T8 LED Retrofit Lamp with External Driver LED 4' T8 Lamp (2) 12W Lamps			2912	0.22	0.12	631	346	-	GE 34235 LEDT8/LC/G/4/840	GE 21378 LED/DR/D2L/LW	-
250	D Block A Side	A14-A64	51	65	4' Wraparound; Tamper-Proof Surface Mounted Fluorescent, (3) 48", Super T-8 lamp, Instant Start Ballast, NLO (BF: .85-.95) Prismatic Acrylic Diffuser	51	36	Surface Mounted T8 LED Retrofit Lamp with External Driver LED 4' T8 Lamp (3) 12W Lamps			2912	3.31	1.82	9,650	5,293	-	GE 34235 LEDT8/LC/G/4/840	GE 21379 LED/DR/D4L/LW	-
251	D Block A Side	Supply Storage Room (between A24 and A25	1	87	4' Wraparound Recessed Fluorescent, (4) 48", Super T-8 lamp, Instant Start Ballast, NLO (BF: .85-.95) (No Diffuser)	1	48	Recessed T8 LED Retrofit Lamp with External Driver LED 4' T8 Lamp (4) 12W Lamps			200	0.09	0.05	17	10	-	GE 34235 LEDT8/LC/G/4/840	GE 21379 LED/DR/D4L/LW	-
252	D Block A Side	Upper Shower Area	7	30	2' Wraparound; Tamper-Proof Surface Mounted Fluorescent, (2) 24", T-8 lamp, Instant Start Ballast, NLO (BF: .85-.95) Prismatic Acrylic Diffuser	7	24	Surface Mounted 2' Wraparound; Tamper-Proof LED Light Fixture. (1) 24W			5824	0.21	0.17	1,214	969	COOPER FAILSAFE FVS8P-2-LD4-2LO-40-UNV-P125-EDC1-WL	-	-	-
253	D Block A Side	Lower Shower Area	6	30	2' Wraparound; Tamper-Proof Surface Mounted Fluorescent, (2) 24", T-8 lamp, Instant Start Ballast, NLO (BF: .85-.95) Prismatic Acrylic Diffuser	6	24	Surface Mounted 2' Wraparound; Tamper-Proof LED Light Fixture. (1) 24W			5824	0.18	0.14	1,041	830	COOPER FAILSAFE FVS8P-2-LD4-2LO-40-UNV-P125-EDC1-WL	-	-	-
254	D Block A Side	Lower Shower Area	1	43	4' Wraparound; Tamper-Proof Surface Mounted Fluorescent, (2) 48", Super T-8 lamp, Instant Start Ballast, NLO (BF: .85-.95) Prismatic Acrylic Diffuser	1	46	Surface Mounted 4' Wraparound; Tamper-Proof LED Light Fixture. (1) 46W			5824	0.04	0.05	252	265	COOPER FAILSAFE FVS8P-4-LD4-2LO-40-UNV-P125-EDC1-WL	-	-	-
255	D Block A Side	Lower Shower Area	2	65	4' Wraparound; Tamper-Proof Surface Mounted Fluorescent, (3) 48", Super T-8 lamp, Instant Start Ballast, NLO (BF: .85-.95) Prismatic Acrylic Diffuser	2	36	Surface Mounted T8 LED Retrofit Lamp with External Driver LED 4' T8 Lamp (3) 12W Lamps			5824	0.13	0.07	757	415	-	GE 34235 LEDT8/LC/G/4/840	GE 21379 LED/DR/D4L/LW	-
256	D Block A Side	Ice Machine Area	1	43	4' Wraparound; Tamper-Proof Surface Mounted Fluorescent, (2) 48", Super T-8 lamp, Instant Start Ballast, NLO (BF: .85-.95) Prismatic Acrylic Diffuser	1	24	Surface Mounted T8 LED Retrofit Lamp with External Driver LED 4' T8 Lamp (2) 12W Lamps			5824	0.04	0.02	252	138	-	GE 34235 LEDT8/LC/G/4/840	GE 21378 LED/DR/D2L/LW	-
257	D Block A Side	Inmate Restroom	1	43	4' Wraparound; Tamper-Proof Surface Mounted Fluorescent, (2) 48", Super T-8 lamp, Instant Start Ballast, NLO (BF: .85-.95) Prismatic Acrylic Diffuser	1	24	Surface Mounted T8 LED Retrofit Lamp with External Driver LED 4' T8 Lamp (2) 12W Lamps			1456	0.04	0.02	63	35	-	GE 34235 LEDT8/LC/G/4/840	GE 21378 LED/DR/D2L/LW	-
258	D Block A Side	Custodial Supply	1	30	2' Wraparound; Tamper-Proof Surface Mounted Fluorescent, (2) 24", T-8 lamp, Instant Start Ballast, NLO (BF: .85-.95) Prismatic Acrylic Diffuser	1	16	Surface Mounted T8 LED Retrofit Lamp with External Driver LED 2' T8 Lamp (2) 8W Lamps			1560	0.03	0.02	46	25	-	GE 36409 LEDT8/LC/G/2/840	GE 21378 LED/DR/D2L/LW	-
259	D Block A Side	Custodial Supply	2	43	4' Wraparound; Tamper-Proof Surface Mounted Fluorescent, (2) 48", Super T-8 lamp, Instant Start Ballast, NLO (BF: .85-.95) Prismatic Acrylic Diffuser	2	24	Surface Mounted T8 LED Retrofit Lamp with External Driver LED 4' T8 Lamp (2) 12W Lamps			1560	0.09	0.05	135	74	-	GE 34235 LEDT8/LC/G/4/840	GE 21378 LED/DR/D2L/LW	-
260	D Block A Side	Custodial Supply	3	43	4' Industrial Surface Mounted Fluorescent, (2) 48", Super T-8 lamp, Instant Start Ballast, NLO (BF: .85-.95) (No Diffuser)	3	24	Surface Mounted T8 LED Retrofit Lamp with External Driver LED 4' T8 Lamp (2) 12W Lamps			1560	0.13	0.07	203	111	-	GE 34235 LEDT8/LC/G/4/840	GE 21378 LED/DR/D2L/LW	-
261	D Block A Side	Pipe Chase	1	43	4' Industrial Surface Mounted Fluorescent, (2) 48", Super T-8 lamp, Instant Start Ballast, NLO (BF: .85-.95) (No Diffuser)	1	24	Surface Mounted T8 LED Retrofit Lamp with External Driver LED 4' T8 Lamp (2) 12W Lamps			200	0.04	0.02	9	5	-	GE 34235 LEDT8/LC/G/4/840	GE 21378 LED/DR/D2L/LW	-
262	D Block A Side	D block A Side Stairwell	2	43	4' Wraparound; Tamper-Proof Surface Mounted Fluorescent, (2) 48", Super T-8 lamp, Instant Start Ballast, NLO (BF: .85-.95) Prismatic Acrylic Diffuser	2	24	Surface Mounted T8 LED Retrofit Lamp with External Driver LED 4' T8 Lamp (2) 12W Lamps			8760	0.09	0.05	759	416	-	GE 34235 LEDT8/LC/G/4/840	GE 21378 LED/DR/D2L/LW	-
263	D Block A Side	C block B Side Stairwell	2	43	4' Wraparound; Tamper-Proof Wall Mounted Fluorescent, (2) 48", Super T-8 lamp, Instant Start Ballast, NLO (BF: .85-.95) Prismatic Acrylic Diffuser	2	24	Wall Mounted T8 LED Retrofit Lamp with External Driver LED 4' T8 Lamp (2) 12W Lamps			8760	0.09	0.05	759	416	-	GE 34235 LEDT8/LC/G/4/840	GE 21378 LED/DR/D2L/LW	-
264	D Block A Side	C block B Side Stairwell	1	3	Universal Face Exit Sign; Black Surface Mounted EXIT C172Light Emitting Diode, (2) 1.5W lamp, Dual Sided (No Diffuser)	1	3	Existing luminaire to remain as is No Retrofit. To remain as is.			8760	0.00	0.00	25	25	-	-	-	-
265	D Block A Side	D block A Side Stairwell	2	43	4' Wraparound; Tamper-Proof Wall Mounted Fluorescent, (2) 48", Super T-8 lamp, Instant Start Ballast, NLO (BF: .85-.95) Prismatic Acrylic Diffuser	2	24	Wall Mounted T8 LED Retrofit Lamp with External Driver LED 4' T8 Lamp (2) 12W Lamps			8760	0.09	0.05	759	416	-	GE 34235 LEDT8/LC/G/4/840	GE 21378 LED/DR/D2L/LW	-
266	D Block A Side	D block A Side Stairwell	1	19	Universal Face Exit Sign; Black Surface Mounted Compact Fluorescent, twin, (2) 7W lamp (No Diffuser)	1	2	Surface Mounted Upgrade EXIT Sign LED Light Fixture. (1) 2W			8760	0.02	0.00	166	17	-	TCP 20716 RD LED PADDLE RETRO HARDWIRE	-	-
267	D Block B Side	D Block B Side Dayroom	6	266	2'x2' Troffer Recessed Metal Halide, (1) 250W lamp Prismatic Acrylic Diffuser	6	49	Recessed Chip On Board (COB) Type Screw-in / Bypass Existing Ballast Light Emitting Diode Lamp, Screw-in, (1) 54W lamp			5824	1.60	0.29	9,303	1,698	-	KEYSTONE KT-LED54HID-EX39-840-D	-	-
268	D Block B Side	D Block B Side Dayroom	16	266	2'x2' Troffer Recessed Flanged Metal Halide, (1) 250W lamp Prismatic Acrylic Diffuser	16	49	Recessed Flanged Chip On Board (COB) Type Screw-in / Bypass Existing Ballast Light Emitting Diode Lamp, Screw-in, (1) 54W lamp			5824	4.26	0.78	24,809	4,529	-	KEYSTONE KT-LED54HID-EX39-840-D	-	-
269	D Block B Side	D Block B Side Dayroom	7	43	4' Corner Mount Wall Vanity; Tamper-Proof Wall Mounted Fluorescent, (2) 48", Super T-8 lamp, Instant Start Ballast, NLO (BF: .85-.95) Prismatic Acrylic Diffuser	7	24	Wall Mounted T8 LED Retrofit Lamp with External Driver LED 4' T8 Lamp (2) 12W Lamps			5824	0.30	0.17	1,766	969	-	GE 34235 LEDT8/LC/G/4/840	GE 21378 LED/DR/D2L/LW	-
270	D Block B Side	D Block B Side Dayroom	1	43	4' Wraparound; Tamper-Proof Wall Mounted Fluorescent, (2) 48", Super T-8 lamp, Instant Start Ballast, NLO (BF: .85-.95) Prismatic Acrylic Diffuser	1	24	Wall Mounted T8 LED Retrofit Lamp with External Driver LED 4' T8 Lamp (2) 12W Lamps			5824	0.04	0.02	252	138	-	GE 34235 LEDT8/LC/G/4/840	GE 21378 LED/DR/D2L/LW	-
271	D Block B Side	D Block B Side Dayroom	3	19	Universal Face Exit Sign; Black Surface Mounted Compact Fluorescent, twin, (2) 7W lamp (No Diffuser)	3	2	Surface Mounted Upgrade EXIT Sign LED Light Fixture. (1) 2W			8760	0.06	0.01	498	52	-	TCP 20716 RD LED PADDLE RETRO HARDWIRE	-	-
272	D Block B Side	B1 Cell / Dorm	5	65	4' Wraparound; Tamper-Proof Surface Mounted Fluorescent, (3) 48", Super T-8 lamp, Instant Start Ballast, NLO (BF: .85-.95) Prismatic Acrylic Diffuser	5	36	Surface Mounted T8 LED Retrofit Lamp with External Driver LED 4' T8 Lamp (3) 12W Lamps			2912	0.32	0.18	946	519	-	GE 34235 LEDT8/LC/G/4/840	GE 21379 LED/DR/D4L/LW	-

Line #	Facility Area	Space	Pre Fixture Qty	Pre Watts/ Fixt	Pre Description	Post Fixture Qty	Post Watt/ Fixt	Post Description	Wallswitch Sensor	Ceiling Sensor	Hours of Operation	Base kW	Proposed kW	Base kWh	Proposed kWh	Luminaire Part #	Lamp Part #	Driver Part#	Misc. Parts
273	D Block B Side	B2-B12 Cell	11	65	4' Wraparound; Tamper-Proof Surface Mounted Fluorescent, (3) 48", Super T-8 lamp, Instant Start Ballast, NLO (BF: .85-.95) Prismatic Acrylic Diffuser	11	36	Surface Mounted T8 LED Retrofit Lamp with External Driver LED 4' T8 Lamp (3) 12W Lamps			2912	0.71	0.39	2,081	1,142	-	GE 34235 LEDT8/LC/G/4/840	GE 21379 LED/DR/D4L/LW	-
274	D Block B Side	B13 Cell	1	65	4' Wraparound; Tamper-Proof Surface Mounted Fluorescent, (3) 48", Super T-8 lamp, Instant Start Ballast, NLO (BF: .85-.95) Prismatic Acrylic Diffuser	1	36	Surface Mounted T8 LED Retrofit Lamp with External Driver LED 4' T8 Lamp (3) 12W Lamps			2912	0.06	0.04	189	104	-	GE 34235 LEDT8/LC/G/4/840	GE 21379 LED/DR/D4L/LW	-
275	D Block B Side	B13 Cell	5	43	4' Wraparound; Tamper-Proof Surface Mounted Fluorescent, (2) 48", Super T-8 lamp, Instant Start Ballast, NLO (BF: .85-.95) Prismatic Acrylic Diffuser	5	24	Surface Mounted T8 LED Retrofit Lamp with External Driver LED 4' T8 Lamp (2) 12W Lamps			2912	0.22	0.12	631	346	-	GE 34235 LEDT8/LC/G/4/840	GE 21378 LED/DR/D2L/LW	-
276	D Block B Side	B14-B64	51	65	4' Wraparound; Tamper-Proof Surface Mounted Fluorescent, (3) 48", Super T-8 lamp, Instant Start Ballast, NLO (BF: .85-.95) Prismatic Acrylic Diffuser	51	36	Surface Mounted T8 LED Retrofit Lamp with External Driver LED 4' T8 Lamp (3) 12W Lamps			2912	3.31	1.82	9,650	5,293	-	GE 34235 LEDT8/LC/G/4/840	GE 21379 LED/DR/D4L/LW	-
277	D Block B Side	Supply Storage Room (between A24 and A25	1	87	4' Wraparound Recessed Fluorescent, (4) 48", Super T-8 lamp, Instant Start Ballast, NLO (BF: .85-.95) (No Diffuser)	1	48	Recessed T8 LED Retrofit Lamp with External Driver LED 4' T8 Lamp (4) 12W Lamps			200	0.09	0.05	17	10	-	GE 34235 LEDT8/LC/G/4/840	GE 21379 LED/DR/D4L/LW	-
278	D Block B Side	Upper Shower Area	7	30	2' Wraparound; Tamper-Proof Surface Mounted Fluorescent, (2) 24", T-8 lamp, Instant Start Ballast, NLO (BF: .85-.95) Prismatic Acrylic Diffuser	7	24	Surface Mounted 2' Wraparound; Tamper-Proof LED Light Fixture. (1) 24W			5824	0.21	0.17	1,214	969	COOPER FAILSAFE FVS8P-2-LD4-2LO-40-UNV-P125-EDC1-WL	-	-	-
279	D Block B Side	Lower Shower Area	6	30	2' Wraparound; Tamper-Proof Surface Mounted Fluorescent, (2) 24", T-8 lamp, Instant Start Ballast, NLO (BF: .85-.95) Prismatic Acrylic Diffuser	6	24	Surface Mounted 2' Wraparound; Tamper-Proof LED Light Fixture. (1) 24W			5824	0.18	0.14	1,041	830	COOPER FAILSAFE FVS8P-2-LD4-2LO-40-UNV-P125-EDC1-WL	-	-	-
280	D Block B Side	Lower Shower Area	1	43	4' Wraparound; Tamper-Proof Surface Mounted Fluorescent, (2) 48", Super T-8 lamp, Instant Start Ballast, NLO (BF: .85-.95) Prismatic Acrylic Diffuser	1	46	Surface Mounted 4' Wraparound; Tamper-Proof LED Light Fixture. (1) 46W			5824	0.04	0.05	252	265	COOPER FAILSAFE FVS8P-4-LD4-2LO-40-UNV-P125-EDC1-WL	-	-	-
281	D Block B Side	Lower Shower Area	2	65	4' Wraparound; Tamper-Proof Surface Mounted Fluorescent, (3) 48", Super T-8 lamp, Instant Start Ballast, NLO (BF: .85-.95) Prismatic Acrylic Diffuser	2	36	Surface Mounted T8 LED Retrofit Lamp with External Driver LED 4' T8 Lamp (3) 12W Lamps			5824	0.13	0.07	757	415	-	GE 34235 LEDT8/LC/G/4/840	GE 21379 LED/DR/D4L/LW	-
282	D Block B Side	Ice Machine Area	1	43	4' Wraparound; Tamper-Proof Surface Mounted Fluorescent, (2) 48", Super T-8 lamp, Instant Start Ballast, NLO (BF: .85-.95) Prismatic Acrylic Diffuser	1	24	Surface Mounted T8 LED Retrofit Lamp with External Driver LED 4' T8 Lamp (2) 12W Lamps			5824	0.04	0.02	252	138	-	GE 34235 LEDT8/LC/G/4/840	GE 21378 LED/DR/D2L/LW	-
283	D Block B Side	Inmate Restroom	1	43	4' Wraparound; Tamper-Proof Surface Mounted Fluorescent, (2) 48", Super T-8 lamp, Instant Start Ballast, NLO (BF: .85-.95) Prismatic Acrylic Diffuser	1	24	Surface Mounted T8 LED Retrofit Lamp with External Driver LED 4' T8 Lamp (2) 12W Lamps			1456	0.04	0.02	63	35	-	GE 34235 LEDT8/LC/G/4/840	GE 21378 LED/DR/D2L/LW	-
284	D Block B Side	Custodial Supply	1	30	2' Wraparound; Tamper-Proof Surface Mounted Fluorescent, (2) 24", T-8 lamp, Instant Start Ballast, NLO (BF: .85-.95) Prismatic Acrylic Diffuser	1	16	Surface Mounted T8 LED Retrofit Lamp with External Driver LED 2' T8 Lamp (2) 8W Lamps			1560	0.03	0.02	46	25	-	GE 36409 LEDT8/LC/G/2/840	GE 21378 LED/DR/D2L/LW	-
285	D Block B Side	Custodial Supply	2	43	4' Wraparound; Tamper-Proof Surface Mounted Fluorescent, (2) 48", Super T-8 lamp, Instant Start Ballast, NLO (BF: .85-.95) Prismatic Acrylic Diffuser	2	24	Surface Mounted T8 LED Retrofit Lamp with External Driver LED 4' T8 Lamp (2) 12W Lamps			1560	0.09	0.05	135	74	-	GE 34235 LEDT8/LC/G/4/840	GE 21378 LED/DR/D2L/LW	-
286	D Block B Side	Custodial Supply	3	43	4' Industrial Surface Mounted Fluorescent, (2) 48", Super T-8 lamp, Instant Start Ballast, NLO (BF: .85-.95) (No Diffuser)	3	24	Surface Mounted T8 LED Retrofit Lamp with External Driver LED 4' T8 Lamp (2) 12W Lamps			1560	0.13	0.07	203	111	-	GE 34235 LEDT8/LC/G/4/840	GE 21378 LED/DR/D2L/LW	-
287	D Block B Side	Pipe Chase	1	43	4' Industrial Surface Mounted Fluorescent, (2) 48", Super T-8 lamp, Instant Start Ballast, NLO (BF: .85-.95) (No Diffuser)	1	24	Surface Mounted T8 LED Retrofit Lamp with External Driver LED 4' T8 Lamp (2) 12W Lamps			200	0.04	0.02	9	5	-	GE 34235 LEDT8/LC/G/4/840	GE 21378 LED/DR/D2L/LW	-
288	D Block B Side	D block B Side Stairwell	2	43	4' Wraparound; Tamper-Proof Surface Mounted Fluorescent, (2) 48", Super T-8 lamp, Instant Start Ballast, NLO (BF: .85-.95) Prismatic Acrylic Diffuser	2	24	Surface Mounted T8 LED Retrofit Lamp with External Driver LED 4' T8 Lamp (2) 12W Lamps			8760	0.09	0.05	759	416	-	GE 34235 LEDT8/LC/G/4/840	GE 21378 LED/DR/D2L/LW	-
289	D Block B Side	D block B Side Stairwell	2	43	4' Wraparound; Tamper-Proof Wall Mounted Fluorescent, (2) 48", Super T-8 lamp, Instant Start Ballast, NLO (BF: .85-.95) Prismatic Acrylic Diffuser	2	24	Wall Mounted T8 LED Retrofit Lamp with External Driver LED 4' T8 Lamp (2) 12W Lamps			8760	0.09	0.05	759	416	-	GE 34235 LEDT8/LC/G/4/840	GE 21378 LED/DR/D2L/LW	-
290	D Block B Side	D block B Side Stairwell	1	3	Universal Face Exit Sign; Black Surface Mounted EXIT C172Light Emitting Diode, (2) 1.5W lamp, Dual Sided (No Diffuser)	1	3	Existing luminaire to remain as is No Retrofit. To remain as is.			8760	0.00	0.00	25	25	-	-	-	-
291	E Block Common	E Block Main Entry	1	43	4' Wraparound; Tamper-Proof Surface Mounted Fluorescent, (2) 48", Super T-8 lamp, Instant Start Ballast, NLO (BF: .85-.95) Prismatic Acrylic Diffuser	1	24	Surface Mounted T8 LED Retrofit Lamp with External Driver LED 4' T8 Lamp (2) 12W Lamps			8760	0.04	0.02	379	208	-	GE 34235 LEDT8/LC/G/4/840	GE 21378 LED/DR/D2L/LW	-
292	E Block Common	Main Vestibule	3	266	2'x2' Troffer Recessed Flanged Metal Halide, (1) 250W lamp Prismatic Acrylic Diffuser	3	49	Recessed Flanged Chip On Board (COB) Type Screw-in / Bypass Existing Ballast Light Emitting Diode Lamp, Screw-in, (1) 54W lamp			8760	0.80	0.15	6,997	1,277	-	KEYSTONE KT-LED54HID-EX39-840-D	-	-
293	E Block Common	Main Vestibule	1	19	Universal Face Exit Sign; Black Surface Mounted Compact Fluorescent, twin, (2) 7W lamp (No Diffuser)	1	2	Surface Mounted Upgrade EXIT Sign LED Light Fixture. (1) 2W			8760	0.02	0.00	166	17	-	TCP 20716 RD LED PADDLE RETRO HARDWIRE	-	-
294	E Block Common	Office	2	43	4' Wraparound; Tamper-Proof Surface Mounted Fluorescent, (2) 48", Super T-8 lamp, Instant Start Ballast, NLO (BF: .85-.95) Prismatic Acrylic Diffuser	2	24	Surface Mounted T8 LED Retrofit Lamp with External Driver LED 4' T8 Lamp (2) 12W Lamps			3640	0.09	0.05	315	173	-	GE 34235 LEDT8/LC/G/4/840	GE 21378 LED/DR/D2L/LW	-
295	E Block Common	Custodial Supply	2	43	4' Wraparound; Tamper-Proof Surface Mounted Fluorescent, (2) 48", Super T-8 lamp, Instant Start Ballast, NLO (BF: .85-.95) Prismatic Acrylic Diffuser	2	24	Surface Mounted T8 LED Retrofit Lamp with External Driver LED 4' T8 Lamp (2) 12W Lamps			1560	0.09	0.05	135	74	-	GE 34235 LEDT8/LC/G/4/840	GE 21378 LED/DR/D2L/LW	-
296	E Block Common	Staff Restroom	1	43	4' Wraparound; Tamper-Proof Surface Mounted Fluorescent, (2) 48", Super T-8 lamp, Instant Start Ballast, NLO (BF: .85-.95) Prismatic Acrylic Diffuser	1	24	Surface Mounted T8 LED Retrofit Lamp with External Driver LED 4' T8 Lamp (2) 12W Lamps			1456	0.04	0.02	63	35	-	GE 34235 LEDT8/LC/G/4/840	GE 21378 LED/DR/D2L/LW	-
297	E Block Common	Custodial Closet	1	43	4' Wraparound; Tamper-Proof Surface Mounted Fluorescent, (2) 48", Super T-8 lamp, Instant Start Ballast, NLO (BF: .85-.95) Prismatic Acrylic Diffuser	1	24	Surface Mounted T8 LED Retrofit Lamp with External Driver LED 4' T8 Lamp (2) 12W Lamps			1456	0.04	0.02	63	35	-	GE 34235 LEDT8/LC/G/4/840	GE 21378 LED/DR/D2L/LW	-
298	E Block Common	Stairwell / Upper Open Office	1	43	4' Corner Mount Wall Vanity; Tamper-Proof Wall Mounted Fluorescent, (2) 48", Super T-8 lamp, Instant Start Ballast, NLO (BF: .85-.95) Prismatic Acrylic Diffuser	1	24	Wall Mounted T8 LED Retrofit Lamp with External Driver LED 4' T8 Lamp (2) 12W Lamps			3640	0.04	0.02	158	86	-	GE 34235 LEDT8/LC/G/4/840	GE 21378 LED/DR/D2L/LW	-
299	E Block Common	Stairwell / Upper Open Office	3	43	4' Wraparound; Tamper-Proof Surface Mounted Fluorescent, (2) 48", Super T-8 lamp, Instant Start Ballast, NLO (BF: .85-.95) Prismatic Acrylic Diffuser	3	24	Surface Mounted T8 LED Retrofit Lamp with External Driver LED 4' T8 Lamp (2) 12W Lamps			3640	0.13	0.07	473	259	-	GE 34235 LEDT8/LC/G/4/840	GE 21378 LED/DR/D2L/LW	-
300	E Block Common	Stairwell / Upper Open Office	12	65	2'x4' Troffer Recessed Flanged Fluorescent, (3) 48", Super T-8 lamp, Instant Start Ballast, NLO (BF: .85-.95) Deep Cell Parabolic Diffuser	12	36	Recessed Flanged T8 LED Retrofit Lamp with External Driver LED 4' T8 Lamp (3) 12W Lamps			3640	0.78	0.43	2,838	1,557	-	GE 34235 LEDT8/LC/G/4/840	GE 21379 LED/DR/D4L/LW	-
301	E Block Common	Stairwell / Upper Open Office	2	19	Universal Face Exit Sign; Black Surface Mounted Compact Fluorescent, twin, (2) 7W lamp (No Diffuser)	2	2	Surface Mounted Upgrade EXIT Sign LED Light Fixture. (1) 2W			8760	0.04	0.00	332	35	-	TCP 20716 RD LED PADDLE RETRO HARDWIRE	-	-
302	E Block Common	Office	2	65	2'x4' Dimmable Recessed Troffer Recessed Flanged Fluorescent, (3) 48", Super T-8 lamp, Instant Start Ballast, NLO (BF: .85-.95) Deep Cell Parabolic Diffuser	2	36	Recessed Flanged T8 LED Retrofit Lamp with External Driver LED 4' T8 Lamp (3) 12W Lamps			3640	0.13	0.07	473	259	-	GE 34235 LEDT8/LC/G/4/840	GE 21379 LED/DR/D4L/LW	-
303	E Block Common	Office	4	65	2'x4' Troffer Recessed Flanged Fluorescent, (3) 48", Super T-8 lamp, Instant Start Ballast, NLO (BF: .85-.95) Prismatic Acrylic Diffuser	4	36	Recessed Flanged T8 LED Retrofit Lamp with External Driver LED 4' T8 Lamp (3) 12W Lamps			3640	0.26	0.14	946	519	-	GE 34235 LEDT8/LC/G/4/840	GE 21379 LED/DR/D4L/LW	-
304	E Block Common	Office	2	65	2'x4' Troffer Recessed Flanged Fluorescent, (3) 48", Super T-8 lamp, Instant Start Ballast, NLO (BF: .85-.95) Prismatic Acrylic Diffuser	2	36	Recessed Flanged T8 LED Retrofit Lamp with External Driver LED 4' T8 Lamp (3) 12W Lamps			3640	0.13	0.07	473	259	-	GE 34235 LEDT8/LC/G/4/840	GE 21379 LED/DR/D4L/LW	-
305	E Block Common	Office Supply Closet	1	65	2'x4' Troffer Recessed Flanged Fluorescent, (3) 48", Super T-8 lamp, Instant Start Ballast, NLO (BF: .85-.95) Prismatic Acrylic Diffuser	1	36	Recessed Flanged T8 LED Retrofit Lamp with External Driver LED 4' T8 Lamp (3) 12W Lamps			520	0.06	0.04	34	19	-	GE 34235 LEDT8/LC/G/4/840	GE 21379 LED/DR/D4L/LW	-
306	E Block Common	Pipe Chase	1	43	4' Industrial Chain Mounted Fluorescent, (2) 48", Super T-8 lamp, Instant Start Ballast, NLO (BF: .85-.95) (No Diffuser)	1	24	Chain Mounted T8 LED Retrofit Lamp with External Driver LED 4' T8 Lamp (2) 12W Lamps			200	0.04	0.02	9	5	-	GE 34235 LEDT8/LC/G/4/840	GE 21378 LED/DR/D2L/LW	-
307	E Block Common	Pipe Chase	1	43	4' Industrial Chain Mounted Fluorescent, (2) 48", Super T-8 lamp, Instant Start Ballast, NLO (BF: .85-.95) (No Diffuser)	1	24	Chain Mounted T8 LED Retrofit Lamp with External Driver LED 4' T8 Lamp (2) 12W Lamps			200	0.04	0.02	9	5	-	GE 34235 LEDT8/LC/G/4/840	GE 21378 LED/DR/D2L/LW	-
308	E Block Common	Back Stairwell	6	43	4' Wraparound; Tamper-Proof Surface Mounted Fluorescent, (2) 48", Super T-8 lamp, Instant Start Ballast, NLO (BF: .85-.95) Prismatic Acrylic Diffuser	6	24	Surface Mounted T8 LED Retrofit Lamp with External Driver LED 4' T8 Lamp (2) 12W Lamps			8760	0.26	0.14	2,277	1,249	-	GE 34235 LEDT8/LC/G/4/840	GE 21378 LED/DR/D2L/LW	-
309	E Block Common	Back Stairwell	1	19	Universal Face Exit Sign; Black Surface Mounted Compact Fluorescent, twin, (2) 7W lamp (No Diffuser)	1	2	Surface Mounted Upgrade EXIT Sign LED Light Fixture. (1) 2W			8760	0.02	0.00	166	17	-	TCP 20716 RD LED PADDLE RETRO HARDWIRE	-	-
310	E Block Common	A.003 Mechanical Equipment Room	13	43	4' Industrial Chain Mounted Fluorescent, (2) 48", Super T-8 lamp, Instant Start Ballast, NLO (BF: .85-.95) (No Diffuser)	13	24	Chain Mounted T8 LED Retrofit Lamp with External Driver LED 4' T8 Lamp (2) 12W Lamps			520	0.56	0.31	293	161	-	GE 34235 LEDT8/LC/G/4/840	GE 21378 LED/DR/D2L/LW	-
311	E Block Common	A.003 Mechanical Equipment Room	2	19	Universal Face Exit Sign; White Surface Mounted Compact Fluorescent, twin, (2) 7W lamp (No Diffuser)	2	3	Surface Mounted Universal Face Exit Sign; White LED Light Fixture. (1) 3W			8760	0.04	0.01	332	52	TCP 22743 RD LED EXIT BBU WH HOUSING	-	-	-

Line #	Facility Area	Space	Pre Fixture Qty	Pre Watts/ Fixt	Pre Description	Post Fixture Qty	Post Watt/ Fixt	Post Description	Wallswitch Sensor	Ceiling Sensor	Hours of Operation	Base kW	Proposed kW	Base kWh	Proposed kWh	Luminaire Part #	Lamp Part #	Driver Part#	Misc. Parts
312	E Block Common	Outside Electrical	3	43	4' Industrial Chain Mounted Fluorescent, (2) 48", Super T-8 lamp, Instant Start Ballast, NLO (BF: .85-.95) (No Diffuser)	3	24	Chain Mounted T8 LED Retrofit Lamp with External Driver LED 4' T8 Lamp (2) 12W Lamps			520	0.13	0.07	68	37	-	GE 34235 LEDT8/LC/G/4/840	GE 21378 LED/DR/D2L/LW	-
313	E Block Common	A.002 Security Panel Closet	1	43	4' Wraparound; Tamper-Proof Surface Mounted Fluorescent, (2) 48", Super T-8 lamp, Instant Start Ballast, NLO (BF: .85-.95) Prismatic Acrylic Diffuser	1	24	Surface Mounted T8 LED Retrofit Lamp with External Driver LED 4' T8 Lamp (2) 12W Lamps			520	0.04	0.02	23	12	-	GE 34235 LEDT8/LC/G/4/840	GE 21378 LED/DR/D2L/LW	-
314	E Block A Side	E Block A Side Dayroom	6	266	2'x2' Troffer Recessed Metal Halide, (1) 250W lamp Prismatic Acrylic Diffuser	6	49	Recessed Chip On Board (COB) Type Screw-in / Bypass Existing Ballast Light Emitting Diode Lamp, Screw-in, (1) 54W lamp			5824	1.60	0.29	9,303	1,698	-	KEYSTONE KT-LED54HID-EX39-840-D	-	-
315	E Block A Side	D Block B Side Dayroom	16	266	2'x2' Troffer Recessed Flanged Metal Halide, (1) 250W lamp Prismatic Acrylic Diffuser	16	49	Recessed Flanged Chip On Board (COB) Type Screw-in / Bypass Existing Ballast Light Emitting Diode Lamp, Screw-in, (1) 54W lamp			5824	4.26	0.78	24,809	4,529	-	KEYSTONE KT-LED54HID-EX39-840-D	-	-
316	E Block A Side	E Block A Side Dayroom	7	43	4' Corner Mount Wall Vanity; Tamper-Proof Wall Mounted Fluorescent, (2) 48", Super T-8 lamp, Instant Start Ballast, NLO (BF: .85-.95) Prismatic Acrylic Diffuser	7	24	Wall Mounted T8 LED Retrofit Lamp with External Driver LED 4' T8 Lamp (2) 12W Lamps			5824	0.30	0.17	1,766	969	-	GE 34235 LEDT8/LC/G/4/840	GE 21378 LED/DR/D2L/LW	-
317	E Block A Side	D Block B Side Dayroom	1	43	4' Wraparound; Tamper-Proof Wall Mounted Fluorescent, (2) 48", Super T-8 lamp, Instant Start Ballast, NLO (BF: .85-.95) Prismatic Acrylic Diffuser	1	24	Wall Mounted T8 LED Retrofit Lamp with External Driver LED 4' T8 Lamp (2) 12W Lamps			5824	0.04	0.02	252	138	-	GE 34235 LEDT8/LC/G/4/840	GE 21378 LED/DR/D2L/LW	-
318	E Block A Side	D Block B Side Dayroom	3	19	Universal Face Exit Sign; Black Surface Mounted Compact Fluorescent, twin, (2) 7W lamp (No Diffuser)	3	2	Surface Mounted Upgrade EXIT Sign LED Light Fixture. (1) 2W			8760	0.06	0.01	498	52	-	TCP 20716 RD LED PADDLE RETRO HARDWIRE	-	-
319	E Block A Side	A1 Cell / Dorm	5	65	4' Wraparound; Tamper-Proof Surface Mounted Fluorescent, (3) 48", Super T-8 lamp, Instant Start Ballast, NLO (BF: .85-.95) Prismatic Acrylic Diffuser	5	36	Surface Mounted T8 LED Retrofit Lamp with External Driver LED 4' T8 Lamp (3) 12W Lamps			2912	0.32	0.18	946	519	-	GE 34235 LEDT8/LC/G/4/840	GE 21379 LED/DR/D4L/LW	-
320	E Block A Side	A2-A12 Cell	11	65	4' Wraparound; Tamper-Proof Surface Mounted Fluorescent, (3) 48", Super T-8 lamp, Instant Start Ballast, NLO (BF: .85-.95) Prismatic Acrylic Diffuser	11	36	Surface Mounted T8 LED Retrofit Lamp with External Driver LED 4' T8 Lamp (3) 12W Lamps			2912	0.71	0.39	2,081	1,142	-	GE 34235 LEDT8/LC/G/4/840	GE 21379 LED/DR/D4L/LW	-
321	E Block A Side	A13 Cell	1	65	4' Wraparound; Tamper-Proof Surface Mounted Fluorescent, (3) 48", Super T-8 lamp, Instant Start Ballast, NLO (BF: .85-.95) Prismatic Acrylic Diffuser	1	36	Surface Mounted T8 LED Retrofit Lamp with External Driver LED 4' T8 Lamp (3) 12W Lamps			2912	0.06	0.04	189	104	-	GE 34235 LEDT8/LC/G/4/840	GE 21379 LED/DR/D4L/LW	-
322	E Block A Side	B13 Cell	5	43	4' Wraparound; Tamper-Proof Surface Mounted Fluorescent, (2) 48", Super T-8 lamp, Instant Start Ballast, NLO (BF: .85-.95) Prismatic Acrylic Diffuser	5	24	Surface Mounted T8 LED Retrofit Lamp with External Driver LED 4' T8 Lamp (2) 12W Lamps			2912	0.22	0.12	631	346	-	GE 34235 LEDT8/LC/G/4/840	GE 21378 LED/DR/D2L/LW	-
323	E Block A Side	A14-A64	51	65	4' Wraparound; Tamper-Proof Surface Mounted Fluorescent, (3) 48", Super T-8 lamp, Instant Start Ballast, NLO (BF: .85-.95) Prismatic Acrylic Diffuser	51	36	Surface Mounted T8 LED Retrofit Lamp with External Driver LED 4' T8 Lamp (3) 12W Lamps			2912	3.31	1.82	9,650	5,293	-	GE 34235 LEDT8/LC/G/4/840	GE 21379 LED/DR/D4L/LW	-
324	E Block A Side	Supply Storage Room (between A24 and A25	1	87	4' Wraparound Recessed Fluorescent, (4) 48", Super T-8 lamp, Instant Start Ballast, NLO (BF: .85-.95) (No Diffuser)	1	48	Recessed T8 LED Retrofit Lamp with External Driver LED 4' T8 Lamp (4) 12W Lamps			200	0.09	0.05	17	10	-	GE 34235 LEDT8/LC/G/4/840	GE 21379 LED/DR/D4L/LW	-
325	E Block A Side	Upper Shower Area	7	30	2' Wraparound; Tamper-Proof Surface Mounted Fluorescent, (2) 24", T-8 lamp, Instant Start Ballast, NLO (BF: .85-.95) Prismatic Acrylic Diffuser	7	24	Surface Mounted 2' Wraparound; Tamper-Proof LED Light Fixture. (1) 24W			5824	0.21	0.17	1,214	969	COOPER FAILSAFE FVS8P-2-LD4-2LO-40-UNV-P125-EDC1-WL	-	-	-
326	E Block A Side	Lower Shower Area	6	30	2' Wraparound; Tamper-Proof Surface Mounted Fluorescent, (2) 24", T-8 lamp, Instant Start Ballast, NLO (BF: .85-.95) Prismatic Acrylic Diffuser	6	24	Surface Mounted 2' Wraparound; Tamper-Proof LED Light Fixture. (1) 24W			5824	0.18	0.14	1,041	830	COOPER FAILSAFE FVS8P-2-LD4-2LO-40-UNV-P125-EDC1-WL	-	-	-
327	E Block A Side	Lower Shower Area	1	43	4' Wraparound; Tamper-Proof Surface Mounted Fluorescent, (2) 48", Super T-8 lamp, Instant Start Ballast, NLO (BF: .85-.95) Prismatic Acrylic Diffuser	1	46	Surface Mounted 4' Wraparound; Tamper-Proof LED Light Fixture. (1) 46W			5824	0.04	0.05	252	265	COOPER FAILSAFE FVS8P-4-LD4-2LO-40-UNV-P125-EDC1-WL	-	-	-
328	E Block A Side	Lower Shower Area	2	65	4' Wraparound; Tamper-Proof Surface Mounted Fluorescent, (3) 48", Super T-8 lamp, Instant Start Ballast, NLO (BF: .85-.95) Prismatic Acrylic Diffuser	2	36	Surface Mounted T8 LED Retrofit Lamp with External Driver LED 4' T8 Lamp (3) 12W Lamps			5824	0.13	0.07	757	415	-	GE 34235 LEDT8/LC/G/4/840	GE 21379 LED/DR/D4L/LW	-
329	E Block A Side	Ice Machine Area	1	43	4' Wraparound; Tamper-Proof Surface Mounted Fluorescent, (2) 48", Super T-8 lamp, Instant Start Ballast, NLO (BF: .85-.95) Prismatic Acrylic Diffuser	1	24	Surface Mounted T8 LED Retrofit Lamp with External Driver LED 4' T8 Lamp (2) 12W Lamps			5824	0.04	0.02	252	138	-	GE 34235 LEDT8/LC/G/4/840	GE 21378 LED/DR/D2L/LW	-
330	E Block A Side	Inmate Restroom	1	43	4' Wraparound; Tamper-Proof Surface Mounted Fluorescent, (2) 48", Super T-8 lamp, Instant Start Ballast, NLO (BF: .85-.95) Prismatic Acrylic Diffuser	1	24	Surface Mounted T8 LED Retrofit Lamp with External Driver LED 4' T8 Lamp (2) 12W Lamps			1456	0.04	0.02	63	35	-	GE 34235 LEDT8/LC/G/4/840	GE 21378 LED/DR/D2L/LW	-
331	E Block A Side	Custodial Supply	1	30	2' Wraparound; Tamper-Proof Surface Mounted Fluorescent, (2) 24", T-8 lamp, Instant Start Ballast, NLO (BF: .85-.95) Prismatic Acrylic Diffuser	1	16	Surface Mounted T8 LED Retrofit Lamp with External Driver LED 2' T8 Lamp (2) 8W Lamps			1560	0.03	0.02	46	25	-	GE 36409 LEDT8/LC/G/2/840	GE 21378 LED/DR/D2L/LW	-
332	E Block A Side	Custodial Supply	2	43	4' Wraparound; Tamper-Proof Surface Mounted Fluorescent, (2) 48", Super T-8 lamp, Instant Start Ballast, NLO (BF: .85-.95) Prismatic Acrylic Diffuser	2	24	Surface Mounted T8 LED Retrofit Lamp with External Driver LED 4' T8 Lamp (2) 12W Lamps			1560	0.09	0.05	135	74	-	GE 34235 LEDT8/LC/G/4/840	GE 21378 LED/DR/D2L/LW	-
333	E Block A Side	Custodial Supply	3	43	4' Industrial Surface Mounted Fluorescent, (2) 48", Super T-8 lamp, Instant Start Ballast, NLO (BF: .85-.95) (No Diffuser)	3	24	Surface Mounted T8 LED Retrofit Lamp with External Driver LED 4' T8 Lamp (2) 12W Lamps			1560	0.13	0.07	203	111	-	GE 34235 LEDT8/LC/G/4/840	GE 21378 LED/DR/D2L/LW	-
334	E Block A Side	Pipe Chase	1	43	4' Industrial Surface Mounted Fluorescent, (2) 48", Super T-8 lamp, Instant Start Ballast, NLO (BF: .85-.95) (No Diffuser)	1	24	Surface Mounted T8 LED Retrofit Lamp with External Driver LED 4' T8 Lamp (2) 12W Lamps			200	0.04	0.02	9	5	-	GE 34235 LEDT8/LC/G/4/840	GE 21378 LED/DR/D2L/LW	-
335	E Block A Side	E block A Side Stairwell	2	43	4' Wraparound; Tamper-Proof Surface Mounted Fluorescent, (2) 48", Super T-8 lamp, Instant Start Ballast, NLO (BF: .85-.95) Prismatic Acrylic Diffuser	2	24	Surface Mounted T8 LED Retrofit Lamp with External Driver LED 4' T8 Lamp (2) 12W Lamps			8760	0.09	0.05	759	416	-	GE 34235 LEDT8/LC/G/4/840	GE 21378 LED/DR/D2L/LW	-
336	E Block A Side	D block B Side Stairwell	2	43	4' Wraparound; Tamper-Proof Wall Mounted Fluorescent, (2) 48", Super T-8 lamp, Instant Start Ballast, NLO (BF: .85-.95) Prismatic Acrylic Diffuser	2	24	Wall Mounted T8 LED Retrofit Lamp with External Driver LED 4' T8 Lamp (2) 12W Lamps			8760	0.09	0.05	759	416	-	GE 34235 LEDT8/LC/G/4/840	GE 21378 LED/DR/D2L/LW	-
337	E Block A Side	D block B Side Stairwell	1	3	Universal Face Exit Sign; Black Surface Mounted EXIT C172Light Emitting Diode, (2) 1.5W lamp, Dual Sided (No Diffuser)	1	3	Existing luminaire to remain as is No Retrofit. To remain as is.			8760	0.00	0.00	25	25	-	-	-	-
338	E Block A Side	E block A Side Stairwell	2	43	4' Wraparound; Tamper-Proof Wall Mounted Fluorescent, (2) 48", Super T-8 lamp, Instant Start Ballast, NLO (BF: .85-.95) Prismatic Acrylic Diffuser	2	24	Wall Mounted T8 LED Retrofit Lamp with External Driver LED 4' T8 Lamp (2) 12W Lamps			8760	0.09	0.05	759	416	-	GE 34235 LEDT8/LC/G/4/840	GE 21378 LED/DR/D2L/LW	-
339	E Block A Side	E block A Side Stairwell	1	19	Universal Face Exit Sign; Black Surface Mounted Compact Fluorescent, twin, (2) 7W lamp (No Diffuser)	1	2	Surface Mounted Upgrade EXIT Sign LED Light Fixture. (1) 2W			8760	0.02	0.00	166	17	-	TCP 20716 RD LED PADDLE RETRO HARDWIRE	-	-
340	E Block B Side	E Block B Side Dayroom	6	266	2'x2' Troffer Recessed Metal Halide, (1) 250W lamp Prismatic Acrylic Diffuser	6	49	Recessed Chip On Board (COB) Type Screw-in / Bypass Existing Ballast Light Emitting Diode Lamp, Screw-in, (1) 54W lamp			5824	1.60	0.29	9,303	1,698	-	KEYSTONE KT-LED54HID-EX39-840-D	-	-
341	E Block B Side	E Block B Side Dayroom	16	266	2'x2' Troffer Recessed Flanged Metal Halide, (1) 250W lamp Prismatic Acrylic Diffuser	16	49	Recessed Flanged Chip On Board (COB) Type Screw-in / Bypass Existing Ballast Light Emitting Diode Lamp, Screw-in, (1) 54W lamp			5824	4.26	0.78	24,809	4,529	-	KEYSTONE KT-LED54HID-EX39-840-D	-	-
342	E Block B Side	E Block B Side Dayroom	7	43	4' Corner Mount Wall Vanity; Tamper-Proof Wall Mounted Fluorescent, (2) 48", Super T-8 lamp, Instant Start Ballast, NLO (BF: .85-.95) Prismatic Acrylic Diffuser	7	24	Wall Mounted T8 LED Retrofit Lamp with External Driver LED 4' T8 Lamp (2) 12W Lamps			5824	0.30	0.17	1,766	969	-	GE 34235 LEDT8/LC/G/4/840	GE 21378 LED/DR/D2L/LW	-
343	E Block B Side	E Block B Side Dayroom	1	43	4' Wraparound; Tamper-Proof Wall Mounted Fluorescent, (2) 48", Super T-8 lamp, Instant Start Ballast, NLO (BF: .85-.95) Prismatic Acrylic Diffuser	1	24	Wall Mounted T8 LED Retrofit Lamp with External Driver LED 4' T8 Lamp (2) 12W Lamps			5824	0.04	0.02	252	138	-	GE 34235 LEDT8/LC/G/4/840	GE 21378 LED/DR/D2L/LW	-
344	E Block B Side	E Block B Side Dayroom	3	19	Universal Face Exit Sign; Black Surface Mounted Compact Fluorescent, twin, (2) 7W lamp (No Diffuser)	3	2	Surface Mounted Upgrade EXIT Sign LED Light Fixture. (1) 2W			8760	0.06	0.01	498	52	-	TCP 20716 RD LED PADDLE RETRO HARDWIRE	-	-
345	E Block B Side	B1 Cell / Dorm	5	65	4' Wraparound; Tamper-Proof Surface Mounted Fluorescent, (3) 48", Super T-8 lamp, Instant Start Ballast, NLO (BF: .85-.95) Prismatic Acrylic Diffuser	5	36	Surface Mounted T8 LED Retrofit Lamp with External Driver LED 4' T8 Lamp (3) 12W Lamps			2912	0.32	0.18	946	519	-	GE 34235 LEDT8/LC/G/4/840	GE 21379 LED/DR/D4L/LW	-
346	E Block B Side	B2-B12 Cell	11	65	4' Wraparound; Tamper-Proof Surface Mounted Fluorescent, (3) 48", Super T-8 lamp, Instant Start Ballast, NLO (BF: .85-.95) Prismatic Acrylic Diffuser	11	36	Surface Mounted T8 LED Retrofit Lamp with External Driver LED 4' T8 Lamp (3) 12W Lamps			2912	0.71	0.39	2,081	1,142	-	GE 34235 LEDT8/LC/G/4/840	GE 21379 LED/DR/D4L/LW	-
347	E Block B Side	B13 Cell	1	65	4' Wraparound; Tamper-Proof Surface Mounted Fluorescent, (3) 48", Super T-8 lamp, Instant Start Ballast, NLO (BF: .85-.95) Prismatic Acrylic Diffuser	1	36	Surface Mounted T8 LED Retrofit Lamp with External Driver LED 4' T8 Lamp (3) 12W Lamps			2912	0.06	0.04	189	104	-	GE 34235 LEDT8/LC/G/4/840	GE 21379 LED/DR/D4L/LW	-
348	E Block B Side	B13 Cell	5	43	4' Wraparound; Tamper-Proof Surface Mounted Fluorescent, (2) 48", Super T-8 lamp, Instant Start Ballast, NLO (BF: .85-.95) Prismatic Acrylic Diffuser	5	24	Surface Mounted T8 LED Retrofit Lamp with External Driver LED 4' T8 Lamp (2) 12W Lamps			2912	0.22	0.12	631	346	-	GE 34235 LEDT8/LC/G/4/840	GE 21378 LED/DR/D2L/LW	-
349	E Block B Side	B14-B64	51	65	4' Wraparound; Tamper-Proof Surface Mounted Fluorescent, (3) 48", Super T-8 lamp, Instant Start Ballast, NLO (BF: .85-.95) Prismatic Acrylic Diffuser	51	36	Surface Mounted T8 LED Retrofit Lamp with External Driver LED 4' T8 Lamp (3) 12W Lamps			2912	3.31	1.82	9,650	5,293	-	GE 34235 LEDT8/LC/G/4/840	GE 21379 LED/DR/D4L/LW	-
350	E Block B Side	Supply Storage Room (between A24 and A25	1	87	4' Wraparound Recessed Fluorescent, (4) 48", Super T-8 lamp, Instant Start Ballast, NLO (BF: .85-.95) (No Diffuser)	1	48	Recessed T8 LED Retrofit Lamp with External Driver LED 4' T8 Lamp (4) 12W Lamps			200	0.09	0.05	17	10	-	GE 34235 LEDT8/LC/G/4/840	GE 21379 LED/DR/D4L/LW	-

Line #	Facility Area	Space	Pre Fixture Qty	Pre Watts/ Fixt	Pre Description	Post Fixture Qty	Post Watt/ Fixt	Post Description	Wallswitch Sensor	Ceiling Sensor	Hours of Operation	Base kW	Proposed kW	Base kWh	Proposed kWh	Luminaire Part #	Lamp Part #	Driver Part#	Misc. Parts
351	E Block B Side	Upper Shower Area	7	30	2' Wraparound; Tamper-Proof Surface Mounted Fluorescent, (2) 24", T-8 lamp, Instant Start Ballast, NLO (BF: .85-.95) Prismatic Acrylic Diffuser	7	24	Surface Mounted 2' Wraparound; Tamper-Proof LED Light Fixture. (1) 24W			5824	0.21	0.17	1,214	969	COOPER FAILSAFE FVS8P-2-LD4-2LO-40-UNV-P125-EDC1-WL	-	-	-
352	E Block B Side	Lower Shower Area	6	30	2' Wraparound; Tamper-Proof Surface Mounted Fluorescent, (2) 24", T-8 lamp, Instant Start Ballast, NLO (BF: .85-.95) Prismatic Acrylic Diffuser	6	24	Surface Mounted 2' Wraparound; Tamper-Proof LED Light Fixture. (1) 24W			5824	0.18	0.14	1,041	830	COOPER FAILSAFE FVS8P-2-LD4-2LO-40-UNV-P125-EDC1-WL	-	-	-
353	E Block B Side	Lower Shower Area	1	43	4' Wraparound; Tamper-Proof Surface Mounted Fluorescent, (2) 48", Super T-8 lamp, Instant Start Ballast, NLO (BF: .85-.95) Prismatic Acrylic Diffuser	1	46	Surface Mounted 4' Wraparound; Tamper-Proof LED Light Fixture. (1) 46W			5824	0.04	0.05	252	265	COOPER FAILSAFE FVS8P-4-LD4-2LO-40-UNV-P125-EDC1-WL	-	-	-
354	E Block B Side	Lower Shower Area	2	65	4' Wraparound; Tamper-Proof Surface Mounted Fluorescent, (3) 48", Super T-8 lamp, Instant Start Ballast, NLO (BF: .85-.95) Prismatic Acrylic Diffuser	2	36	Surface Mounted T8 LED Retrofit Lamp with External Driver LED 4' T8 Lamp (3) 12W Lamps			5824	0.13	0.07	757	415	-	GE 34235 LEDT8/LC/G/4/840	GE 21379 LED/DR/D4L/LW	-
355	E Block B Side	Ice Machine Area	1	43	4' Wraparound; Tamper-Proof Surface Mounted Fluorescent, (2) 48", Super T-8 lamp, Instant Start Ballast, NLO (BF: .85-.95) Prismatic Acrylic Diffuser	1	24	Surface Mounted T8 LED Retrofit Lamp with External Driver LED 4' T8 Lamp (2) 12W Lamps			5824	0.04	0.02	252	138	-	GE 34235 LEDT8/LC/G/4/840	GE 21378 LED/DR/D2L/LW	-
356	E Block B Side	Inmate Restroom	1	43	4' Wraparound; Tamper-Proof Surface Mounted Fluorescent, (2) 48", Super T-8 lamp, Instant Start Ballast, NLO (BF: .85-.95) Prismatic Acrylic Diffuser	1	24	Surface Mounted T8 LED Retrofit Lamp with External Driver LED 4' T8 Lamp (2) 12W Lamps			1456	0.04	0.02	63	35	-	GE 34235 LEDT8/LC/G/4/840	GE 21378 LED/DR/D2L/LW	-
357	E Block B Side	Custodial Supply	1	30	2' Wraparound; Tamper-Proof Surface Mounted Fluorescent, (2) 24", T-8 lamp, Instant Start Ballast, NLO (BF: .85-.95) Prismatic Acrylic Diffuser	1	16	Surface Mounted T8 LED Retrofit Lamp with External Driver LED 2' T8 Lamp (2) 8W Lamps			1560	0.03	0.02	46	25	-	GE 36409 LEDT8/LC/G/2/840	GE 21378 LED/DR/D2L/LW	-
358	E Block B Side	Custodial Supply	2	43	4' Wraparound; Tamper-Proof Surface Mounted Fluorescent, (2) 48", Super T-8 lamp, Instant Start Ballast, NLO (BF: .85-.95) Prismatic Acrylic Diffuser	2	24	Surface Mounted T8 LED Retrofit Lamp with External Driver LED 4' T8 Lamp (2) 12W Lamps			1560	0.09	0.05	135	74	-	GE 34235 LEDT8/LC/G/4/840	GE 21378 LED/DR/D2L/LW	-
359	E Block B Side	Custodial Supply	3	43	4' Industrial Surface Mounted Fluorescent, (2) 48", Super T-8 lamp, Instant Start Ballast, NLO (BF: .85-.95) (No Diffuser)	3	24	Surface Mounted T8 LED Retrofit Lamp with External Driver LED 4' T8 Lamp (2) 12W Lamps			1560	0.13	0.07	203	111	-	GE 34235 LEDT8/LC/G/4/840	GE 21378 LED/DR/D2L/LW	-
360	E Block B Side	Pipe Chase	1	43	4' Industrial Surface Mounted Fluorescent, (2) 48", Super T-8 lamp, Instant Start Ballast, NLO (BF: .85-.95) (No Diffuser)	1	24	Surface Mounted T8 LED Retrofit Lamp with External Driver LED 4' T8 Lamp (2) 12W Lamps			200	0.04	0.02	9	5	-	GE 34235 LEDT8/LC/G/4/840	GE 21378 LED/DR/D2L/LW	-
361	E Block B Side	E block B Side Stairwell	2	43	4' Wraparound; Tamper-Proof Surface Mounted Fluorescent, (2) 48", Super T-8 lamp, Instant Start Ballast, NLO (BF: .85-.95) Prismatic Acrylic Diffuser	2	24	Surface Mounted T8 LED Retrofit Lamp with External Driver LED 4' T8 Lamp (2) 12W Lamps			8760	0.09	0.05	759	416	-	GE 34235 LEDT8/LC/G/4/840	GE 21378 LED/DR/D2L/LW	-
362	E Block B Side	E block B Side Stairwell	2	43	4' Wraparound; Tamper-Proof Wall Mounted Fluorescent, (2) 48", Super T-8 lamp, Instant Start Ballast, NLO (BF: .85-.95) Prismatic Acrylic Diffuser	2	24	Wall Mounted T8 LED Retrofit Lamp with External Driver LED 4' T8 Lamp (2) 12W Lamps			8760	0.09	0.05	759	416	-	GE 34235 LEDT8/LC/G/4/840	GE 21378 LED/DR/D2L/LW	-
363	E Block B Side	E block B Side Stairwell	1	19	Universal Face Exit Sign; Black Surface Mounted Compact Fluorescent, twin, (2) 7W lamp (No Diffuser)	1	2	Surface Mounted Upgrade EXIT Sign LED Light Fixture. (1) 2W			8760	0.02	0.00	166	17	-	TCP 20716 RD LED PADDLE RETRO HARDWIRE	-	-
364	F Block Common	F Block Main Entry	1	43	4' Wraparound; Tamper-Proof Surface Mounted Fluorescent, (2) 48", Super T-8 lamp, Instant Start Ballast, NLO (BF: .85-.95) Prismatic Acrylic Diffuser	1	24	Surface Mounted T8 LED Retrofit Lamp with External Driver LED 4' T8 Lamp (2) 12W Lamps			8760	0.04	0.02	379	208	-	GE 34235 LEDT8/LC/G/4/840	GE 21378 LED/DR/D2L/LW	-
365	F Block Common	Main Vestibule	3	266	2'x2' Troffer Recessed Flanged Metal Halide, (1) 250W lamp Prismatic Acrylic Diffuser	3	49	Recessed Flanged Chip On Board (COB) Type Screw-in / Bypass Existing Ballast Light Emitting Diode Lamp, Screw-in, (1) 54W lamp			8760	0.80	0.15	6,997	1,277	-	KEYSTONE KT-LED54HID-EX39-840-D	-	-
366	F Block Common	Main Vestibule	1	19	Universal Face Exit Sign; Black Surface Mounted Compact Fluorescent, twin, (2) 7W lamp (No Diffuser)	1	2	Surface Mounted Upgrade EXIT Sign LED Light Fixture. (1) 2W			8760	0.02	0.00	166	17	-	TCP 20716 RD LED PADDLE RETRO HARDWIRE	-	-
367	F Block Common	Office	2	43	4' Wraparound; Tamper-Proof Surface Mounted Fluorescent, (2) 48", Super T-8 lamp, Instant Start Ballast, NLO (BF: .85-.95) Prismatic Acrylic Diffuser	2	24	Surface Mounted T8 LED Retrofit Lamp with External Driver LED 4' T8 Lamp (2) 12W Lamps			3640	0.09	0.05	315	173	-	GE 34235 LEDT8/LC/G/4/840	GE 21378 LED/DR/D2L/LW	-
368	F Block Common	Custodial Supply	2	43	4' Wraparound; Tamper-Proof Surface Mounted Fluorescent, (2) 48", Super T-8 lamp, Instant Start Ballast, NLO (BF: .85-.95) Prismatic Acrylic Diffuser	2	24	Surface Mounted T8 LED Retrofit Lamp with External Driver LED 4' T8 Lamp (2) 12W Lamps			1560	0.09	0.05	135	74	-	GE 34235 LEDT8/LC/G/4/840	GE 21378 LED/DR/D2L/LW	-
369	F Block Common	Staff Restroom	1	43	4' Wraparound; Tamper-Proof Surface Mounted Fluorescent, (2) 48", Super T-8 lamp, Instant Start Ballast, NLO (BF: .85-.95) Prismatic Acrylic Diffuser	1	24	Surface Mounted T8 LED Retrofit Lamp with External Driver LED 4' T8 Lamp (2) 12W Lamps			1456	0.04	0.02	63	35	-	GE 34235 LEDT8/LC/G/4/840	GE 21378 LED/DR/D2L/LW	-
370	F Block Common	Custodial Closet	1	43	4' Wraparound; Tamper-Proof Surface Mounted Fluorescent, (2) 48", Super T-8 lamp, Instant Start Ballast, NLO (BF: .85-.95) Prismatic Acrylic Diffuser	1	24	Surface Mounted T8 LED Retrofit Lamp with External Driver LED 4' T8 Lamp (2) 12W Lamps			1456	0.04	0.02	63	35	-	GE 34235 LEDT8/LC/G/4/840	GE 21378 LED/DR/D2L/LW	-
371	F Block Common	Stairwell / Upper Open Office	1	43	4' Corner Mount Wall Vanity; Tamper-Proof Wall Mounted Fluorescent, (2) 48", Super T-8 lamp, Instant Start Ballast, NLO (BF: .85-.95) Prismatic Acrylic Diffuser	1	24	Wall Mounted T8 LED Retrofit Lamp with External Driver LED 4' T8 Lamp (2) 12W Lamps			3640	0.04	0.02	158	86	-	GE 34235 LEDT8/LC/G/4/840	GE 21378 LED/DR/D2L/LW	-
372	F Block Common	Stairwell / Upper Open Office	3	43	4' Wraparound; Tamper-Proof Surface Mounted Fluorescent, (2) 48", Super T-8 lamp, Instant Start Ballast, NLO (BF: .85-.95) Prismatic Acrylic Diffuser	3	24	Surface Mounted T8 LED Retrofit Lamp with External Driver LED 4' T8 Lamp (2) 12W Lamps			3640	0.13	0.07	473	259	-	GE 34235 LEDT8/LC/G/4/840	GE 21378 LED/DR/D2L/LW	-
373	F Block Common	Stairwell / Upper Open Office	12	65	2'x4' Troffer Recessed Flanged Fluorescent, (3) 48", Super T-8 lamp, Instant Start Ballast, NLO (BF: .85-.95) Deep Cell Parabolic Diffuser	12	36	Recessed Flanged T8 LED Retrofit Lamp with External Driver LED 4' T8 Lamp (3) 12W Lamps			3640	0.78	0.43	2,838	1,557	-	GE 34235 LEDT8/LC/G/4/840	GE 21379 LED/DR/D4L/LW	-
374	F Block Common	Stairwell / Upper Open Office	2	19	Universal Face Exit Sign; Black Surface Mounted Compact Fluorescent, twin, (2) 7W lamp (No Diffuser)	2	2	Surface Mounted Upgrade EXIT Sign LED Light Fixture. (1) 2W			8760	0.04	0.00	332	35	-	TCP 20716 RD LED PADDLE RETRO HARDWIRE	-	-
375	F Block Common	Office	2	65	2'x4' Dimmable Recessed Troffer Recessed Flanged Fluorescent, (3) 48", Super T-8 lamp, Instant Start Ballast, NLO (BF: .85-.95) Deep Cell Parabolic Diffuser	2	36	Recessed Flanged T8 LED Retrofit Lamp with External Driver LED 4' T8 Lamp (3) 12W Lamps			3640	0.13	0.07	473	259	-	GE 34235 LEDT8/LC/G/4/840	GE 21379 LED/DR/D4L/LW	-
376	F Block Common	Office	4	65	2'x4' Troffer Recessed Flanged Fluorescent, (3) 48", Super T-8 lamp, Instant Start Ballast, NLO (BF: .85-.95) Prismatic Acrylic Diffuser	4	36	Recessed Flanged T8 LED Retrofit Lamp with External Driver LED 4' T8 Lamp (3) 12W Lamps			3640	0.26	0.14	946	519	-	GE 34235 LEDT8/LC/G/4/840	GE 21379 LED/DR/D4L/LW	-
377	F Block Common	Office	2	65	2'x4' Troffer Recessed Flanged Fluorescent, (3) 48", Super T-8 lamp, Instant Start Ballast, NLO (BF: .85-.95) Prismatic Acrylic Diffuser	2	36	Recessed Flanged T8 LED Retrofit Lamp with External Driver LED 4' T8 Lamp (3) 12W Lamps			3640	0.13	0.07	473	259	-	GE 34235 LEDT8/LC/G/4/840	GE 21379 LED/DR/D4L/LW	-
378	F Block Common	Office Supply Closet	1	65	2'x4' Troffer Recessed Flanged Fluorescent, (3) 48", Super T-8 lamp, Instant Start Ballast, NLO (BF: .85-.95) Prismatic Acrylic Diffuser	1	36	Recessed Flanged T8 LED Retrofit Lamp with External Driver LED 4' T8 Lamp (3) 12W Lamps			520	0.06	0.04	34	19	-	GE 34235 LEDT8/LC/G/4/840	GE 21379 LED/DR/D4L/LW	-
379	F Block Common	Pipe Chase	1	43	4' Industrial Chain Mounted Fluorescent, (2) 48", Super T-8 lamp, Instant Start Ballast, NLO (BF: .85-.95) (No Diffuser)	1	24	Chain Mounted T8 LED Retrofit Lamp with External Driver LED 4' T8 Lamp (2) 12W Lamps			200	0.04	0.02	9	5	-	GE 34235 LEDT8/LC/G/4/840	GE 21378 LED/DR/D2L/LW	-
380	F Block Common	Pipe Chase	1	43	4' Industrial Chain Mounted Fluorescent, (2) 48", Super T-8 lamp, Instant Start Ballast, NLO (BF: .85-.95) (No Diffuser)	1	24	Chain Mounted T8 LED Retrofit Lamp with External Driver LED 4' T8 Lamp (2) 12W Lamps			200	0.04	0.02	9	5	-	GE 34235 LEDT8/LC/G/4/840	GE 21378 LED/DR/D2L/LW	-
381	F Block Common	Back Stairwell	6	43	4' Wraparound; Tamper-Proof Surface Mounted Fluorescent, (2) 48", Super T-8 lamp, Instant Start Ballast, NLO (BF: .85-.95) Prismatic Acrylic Diffuser	6	24	Surface Mounted T8 LED Retrofit Lamp with External Driver LED 4' T8 Lamp (2) 12W Lamps			8760	0.26	0.14	2,277	1,249	-	GE 34235 LEDT8/LC/G/4/840	GE 21378 LED/DR/D2L/LW	-
382	F Block Common	Back Stairwell	1	19	Universal Face Exit Sign; Black Surface Mounted Compact Fluorescent, twin, (2) 7W lamp (No Diffuser)	1	2	Surface Mounted Upgrade EXIT Sign LED Light Fixture. (1) 2W			8760	0.02	0.00	166	17	-	TCP 20716 RD LED PADDLE RETRO HARDWIRE	-	-
383	F Block Common	A.003 Mechanical Equipment Room	13	43	4' Industrial Chain Mounted Fluorescent, (2) 48", Super T-8 lamp, Instant Start Ballast, NLO (BF: .85-.95) (No Diffuser)	13	24	Chain Mounted T8 LED Retrofit Lamp with External Driver LED 4' T8 Lamp (2) 12W Lamps			520	0.56	0.31	293	161	-	GE 34235 LEDT8/LC/G/4/840	GE 21378 LED/DR/D2L/LW	-
384	F Block Common	A.003 Mechanical Equipment Room	2	19	Universal Face Exit Sign; White Surface Mounted Compact Fluorescent, twin, (2) 7W lamp (No Diffuser)	2	3	Surface Mounted Universal Face Exit Sign; White LED Light Fixture. (1) 3W			8760	0.04	0.01	332	52	TCP 22743 RD LED EXIT BBU WH HOUSING	-	-	-
385	F Block Common	Outside Electrical	3	43	4' Industrial Chain Mounted Fluorescent, (2) 48", Super T-8 lamp, Instant Start Ballast, NLO (BF: .85-.95) (No Diffuser)	3	24	Chain Mounted T8 LED Retrofit Lamp with External Driver LED 4' T8 Lamp (2) 12W Lamps			520	0.13	0.07	68	37	-	GE 34235 LEDT8/LC/G/4/840	GE 21378 LED/DR/D2L/LW	-
386	F Block Common	A.002 Security Panel Closet	1	43	4' Wraparound; Tamper-Proof Surface Mounted Fluorescent, (2) 48", Super T-8 lamp, Instant Start Ballast, NLO (BF: .85-.95) Prismatic Acrylic Diffuser	1	24	Surface Mounted T8 LED Retrofit Lamp with External Driver LED 4' T8 Lamp (2) 12W Lamps			520	0.04	0.02	23	12	-	GE 34235 LEDT8/LC/G/4/840	GE 21378 LED/DR/D2L/LW	-
387	F Block A Side	F Block A Side Dayroom	6	266	2'x2' Troffer Recessed Metal Halide, (1) 250W lamp Prismatic Acrylic Diffuser	6	49	Recessed Chip On Board (COB) Type Screw-in / Bypass Existing Ballast Light Emitting Diode Lamp, Screw-in, (1) 54W lamp			5824	1.60	0.29	9,303	1,698	-	KEYSTONE KT-LED54HID-EX39-840-D	-	-
388	F Block A Side	E Block B Side Dayroom	16	266	2'x2' Troffer Recessed Flanged Metal Halide, (1) 250W lamp Prismatic Acrylic Diffuser	16	49	Recessed Flanged Chip On Board (COB) Type Screw-in / Bypass Existing Ballast Light Emitting Diode Lamp, Screw-in, (1) 54W lamp			5824	4.26	0.78	24,809	4,529	-	KEYSTONE KT-LED54HID-EX39-840-D	-	-
389	F Block A Side	F Block A Side Dayroom	7	43	4' Corner Mount Wall Vanity; Tamper-Proof Wall Mounted Fluorescent, (2) 48", Super T-8 lamp, Instant Start Ballast, NLO (BF: .85-.95) Prismatic Acrylic Diffuser	7	24	Wall Mounted T8 LED Retrofit Lamp with External Driver LED 4' T8 Lamp (2) 12W Lamps			5824	0.30	0.17	1,766	969	-	GE 34235 LEDT8/LC/G/4/840	GE 21378 LED/DR/D2L/LW	-

Line #	Facility Area	Space	Pre Fixture Qty	Pre Watts/ Fixt	Pre Description	Post Fixture Qty	Post Watt/ Fixt	Post Description	Wallswitch Sensor	Ceiling Sensor	Hours of Operation	Base kW	Proposed kW	Base kWh	Proposed kWh	Luminaire Part #	Lamp Part #	Driver Part#	Misc. Parts
390	F Block A Side	E Block B Side Dayroom	1	43	4' Wraparound; Tamper-Proof Wall Mounted Fluorescent, (2) 48", Super T-8 lamp, Instant Start Ballast, NLO (BF: .85-.95) Prismatic Acrylic Diffuser	1	24	Wall Mounted T8 LED Retrofit Lamp with External Driver LED 4' T8 Lamp (2) 12W Lamps			5824	0.04	0.02	252	138	-	GE 34235 LEDT8/LC/G/4/840	GE 21378 LED/DR/D2L/LW	-
391	F Block A Side	E Block B Side Dayroom	3	19	Universal Face Exit Sign; Black Surface Mounted Compact Fluorescent, twin, (2) 7W lamp (No Diffuser)	3	2	Surface Mounted Upgrade EXIT Sign LED Light Fixture. (1) 2W			8760	0.06	0.01	498	52	-	TCP 20716 RD LED PADDLE RETRO HARDWIRE	-	-
392	F Block A Side	A1 Cell / Dorm	5	65	4' Wraparound; Tamper-Proof Surface Mounted Fluorescent, (3) 48", Super T-8 lamp, Instant Start Ballast, NLO (BF: .85-.95) Prismatic Acrylic Diffuser	5	36	Surface Mounted T8 LED Retrofit Lamp with External Driver LED 4' T8 Lamp (3) 12W Lamps			2912	0.32	0.18	946	519	-	GE 34235 LEDT8/LC/G/4/840	GE 21379 LED/DR/D4L/LW	-
393	F Block A Side	A2-A12 Cell	11	65	4' Wraparound; Tamper-Proof Surface Mounted Fluorescent, (3) 48", Super T-8 lamp, Instant Start Ballast, NLO (BF: .85-.95) Prismatic Acrylic Diffuser	11	36	Surface Mounted T8 LED Retrofit Lamp with External Driver LED 4' T8 Lamp (3) 12W Lamps			2912	0.71	0.39	2,081	1,142	-	GE 34235 LEDT8/LC/G/4/840	GE 21379 LED/DR/D4L/LW	-
394	F Block A Side	A13 Cell	1	65	4' Wraparound; Tamper-Proof Surface Mounted Fluorescent, (3) 48", Super T-8 lamp, Instant Start Ballast, NLO (BF: .85-.95) Prismatic Acrylic Diffuser	1	36	Surface Mounted T8 LED Retrofit Lamp with External Driver LED 4' T8 Lamp (3) 12W Lamps			2912	0.06	0.04	189	104	-	GE 34235 LEDT8/LC/G/4/840	GE 21379 LED/DR/D4L/LW	-
395	F Block A Side	B13 Cell	5	43	4' Wraparound; Tamper-Proof Surface Mounted Fluorescent, (2) 48", Super T-8 lamp, Instant Start Ballast, NLO (BF: .85-.95) Prismatic Acrylic Diffuser	5	24	Surface Mounted T8 LED Retrofit Lamp with External Driver LED 4' T8 Lamp (2) 12W Lamps			2912	0.22	0.12	631	346	-	GE 34235 LEDT8/LC/G/4/840	GE 21378 LED/DR/D2L/LW	-
396	F Block A Side	A14-A64	51	65	4' Wraparound; Tamper-Proof Surface Mounted Fluorescent, (3) 48", Super T-8 lamp, Instant Start Ballast, NLO (BF: .85-.95) Prismatic Acrylic Diffuser	51	36	Surface Mounted T8 LED Retrofit Lamp with External Driver LED 4' T8 Lamp (3) 12W Lamps			2912	3.31	1.82	9,650	5,293	-	GE 34235 LEDT8/LC/G/4/840	GE 21379 LED/DR/D4L/LW	-
397	F Block A Side	Supply Storage Room (between A24 and A25	1	87	4' Wraparound Recessed Fluorescent, (4) 48", Super T-8 lamp, Instant Start Ballast, NLO (BF: .85-.95) (No Diffuser)	1	48	Recessed T8 LED Retrofit Lamp with External Driver LED 4' T8 Lamp (4) 12W Lamps			200	0.09	0.05	17	10	-	GE 34235 LEDT8/LC/G/4/840	GE 21379 LED/DR/D4L/LW	-
398	F Block A Side	Upper Shower Area	7	30	2' Wraparound; Tamper-Proof Surface Mounted Fluorescent, (2) 24", T-8 lamp, Instant Start Ballast, NLO (BF: .85-.95) Prismatic Acrylic Diffuser	7	24	Surface Mounted 2' Wraparound; Tamper-Proof LED Light Fixture. (1) 24W			5824	0.21	0.17	1,214	969	COOPER FAILSAFE FVS8P-2-LD4-2LO-40-UNV-P125-EDC1-WL	-	-	-
399	F Block A Side	Lower Shower Area	6	30	2' Wraparound; Tamper-Proof Surface Mounted Fluorescent, (2) 24", T-8 lamp, Instant Start Ballast, NLO (BF: .85-.95) Prismatic Acrylic Diffuser	6	24	Surface Mounted 2' Wraparound; Tamper-Proof LED Light Fixture. (1) 24W			5824	0.18	0.14	1,041	830	COOPER FAILSAFE FVS8P-2-LD4-2LO-40-UNV-P125-EDC1-WL	-	-	-
400	F Block A Side	Lower Shower Area	1	43	4' Wraparound; Tamper-Proof Surface Mounted Fluorescent, (2) 48", Super T-8 lamp, Instant Start Ballast, NLO (BF: .85-.95) Prismatic Acrylic Diffuser	1	46	Surface Mounted 4' Wraparound; Tamper-Proof LED Light Fixture. (1) 46W			5824	0.04	0.05	252	265	COOPER FAILSAFE FVS8P-4-LD4-2LO-40-UNV-P125-EDC1-WL	-	-	-
401	F Block A Side	Lower Shower Area	2	65	4' Wraparound; Tamper-Proof Surface Mounted Fluorescent, (3) 48", Super T-8 lamp, Instant Start Ballast, NLO (BF: .85-.95) Prismatic Acrylic Diffuser	2	36	Surface Mounted T8 LED Retrofit Lamp with External Driver LED 4' T8 Lamp (3) 12W Lamps			5824	0.13	0.07	757	415	-	GE 34235 LEDT8/LC/G/4/840	GE 21379 LED/DR/D4L/LW	-
402	F Block A Side	Ice Machine Area	1	43	4' Wraparound; Tamper-Proof Surface Mounted Fluorescent, (2) 48", Super T-8 lamp, Instant Start Ballast, NLO (BF: .85-.95) Prismatic Acrylic Diffuser	1	24	Surface Mounted T8 LED Retrofit Lamp with External Driver LED 4' T8 Lamp (2) 12W Lamps			5824	0.04	0.02	252	138	-	GE 34235 LEDT8/LC/G/4/840	GE 21378 LED/DR/D2L/LW	-
403	F Block A Side	Inmate Restroom	1	43	4' Wraparound; Tamper-Proof Surface Mounted Fluorescent, (2) 48", Super T-8 lamp, Instant Start Ballast, NLO (BF: .85-.95) Prismatic Acrylic Diffuser	1	24	Surface Mounted T8 LED Retrofit Lamp with External Driver LED 4' T8 Lamp (2) 12W Lamps			1456	0.04	0.02	63	35	-	GE 34235 LEDT8/LC/G/4/840	GE 21378 LED/DR/D2L/LW	-
404	F Block A Side	Custodial Supply	1	30	2' Wraparound; Tamper-Proof Surface Mounted Fluorescent, (2) 24", T-8 lamp, Instant Start Ballast, NLO (BF: .85-.95) Prismatic Acrylic Diffuser	1	16	Surface Mounted T8 LED Retrofit Lamp with External Driver LED 2' T8 Lamp (2) 8W Lamps			1560	0.03	0.02	46	25	-	GE 36409 LEDT8/LC/G/2/840	GE 21378 LED/DR/D2L/LW	-
405	F Block A Side	Custodial Supply	2	43	4' Wraparound; Tamper-Proof Surface Mounted Fluorescent, (2) 48", Super T-8 lamp, Instant Start Ballast, NLO (BF: .85-.95) Prismatic Acrylic Diffuser	2	24	Surface Mounted T8 LED Retrofit Lamp with External Driver LED 4' T8 Lamp (2) 12W Lamps			1560	0.09	0.05	135	74	-	GE 34235 LEDT8/LC/G/4/840	GE 21378 LED/DR/D2L/LW	-
406	F Block A Side	Custodial Supply	3	43	4' Industrial Surface Mounted Fluorescent, (2) 48", Super T-8 lamp, Instant Start Ballast, NLO (BF: .85-.95) (No Diffuser)	3	24	Surface Mounted T8 LED Retrofit Lamp with External Driver LED 4' T8 Lamp (2) 12W Lamps			1560	0.13	0.07	203	111	-	GE 34235 LEDT8/LC/G/4/840	GE 21378 LED/DR/D2L/LW	-
407	F Block A Side	Pipe Chase	1	43	4' Industrial Surface Mounted Fluorescent, (2) 48", Super T-8 lamp, Instant Start Ballast, NLO (BF: .85-.95) (No Diffuser)	1	24	Surface Mounted T8 LED Retrofit Lamp with External Driver LED 4' T8 Lamp (2) 12W Lamps			200	0.04	0.02	9	5	-	GE 34235 LEDT8/LC/G/4/840	GE 21378 LED/DR/D2L/LW	-
408	F Block A Side	F block A Side Stairwell	2	43	4' Wraparound; Tamper-Proof Surface Mounted Fluorescent, (2) 48", Super T-8 lamp, Instant Start Ballast, NLO (BF: .85-.95) Prismatic Acrylic Diffuser	2	24	Surface Mounted T8 LED Retrofit Lamp with External Driver LED 4' T8 Lamp (2) 12W Lamps			8760	0.09	0.05	759	416	-	GE 34235 LEDT8/LC/G/4/840	GE 21378 LED/DR/D2L/LW	-
409	F Block A Side	F block A Side Stairwell	2	43	4' Wraparound; Tamper-Proof Wall Mounted Fluorescent, (2) 48", Super T-8 lamp, Instant Start Ballast, NLO (BF: .85-.95) Prismatic Acrylic Diffuser	2	24	Wall Mounted T8 LED Retrofit Lamp with External Driver LED 4' T8 Lamp (2) 12W Lamps			8760	0.09	0.05	759	416	-	GE 34235 LEDT8/LC/G/4/840	GE 21378 LED/DR/D2L/LW	-
410	F Block A Side	F block A Side Stairwell	1	19	Universal Face Exit Sign; Black Surface Mounted Compact Fluorescent, twin, (2) 7W lamp (No Diffuser)	1	2	Surface Mounted Upgrade EXIT Sign LED Light Fixture. (1) 2W			8760	0.02	0.00	166	17	-	TCP 20716 RD LED PADDLE RETRO HARDWIRE	-	-
411	F Block A Side	E block B Side Stairwell	2	43	4' Wraparound; Tamper-Proof Wall Mounted Fluorescent, (2) 48", Super T-8 lamp, Instant Start Ballast, NLO (BF: .85-.95) Prismatic Acrylic Diffuser	2	24	Wall Mounted T8 LED Retrofit Lamp with External Driver LED 4' T8 Lamp (2) 12W Lamps			8760	0.09	0.05	759	416	-	GE 34235 LEDT8/LC/G/4/840	GE 21378 LED/DR/D2L/LW	-
412	F Block A Side	E block B Side Stairwell	1	3	Universal Face Exit Sign; Black Surface Mounted EXIT C172Light Emitting Diode, (2) 1.5W lamp, Dual Sided (No Diffuser)	1	3	Existing luminaire to remain as is No Retrofit. To remain as is.			8760	0.00	0.00	25	25	-	-	-	-
413	F Block B Side	F Block B Side Dayroom	6	266	2'x2' Troffer Recessed Metal Halide, (1) 250W lamp Prismatic Acrylic Diffuser	6	49	Recessed Chip On Board (COB) Type Screw-in / Bypass Existing Ballast Light Emitting Diode Lamp, Screw-in, (1) 54W lamp			5824	1.60	0.29	9,303	1,698	-	KEYSTONE KT-LED54HID-EX39-840-D	-	-
414	F Block B Side	F Block B Side Dayroom	16	266	2'x2' Troffer Recessed Flanged Metal Halide, (1) 250W lamp Prismatic Acrylic Diffuser	16	49	Recessed Flanged Chip On Board (COB) Type Screw-in / Bypass Existing Ballast Light Emitting Diode Lamp, Screw-in, (1) 54W lamp			5824	4.26	0.78	24,809	4,529	-	KEYSTONE KT-LED54HID-EX39-840-D	-	-
415	F Block B Side	F Block B Side Dayroom	7	43	4' Corner Mount Wall Vanity; Tamper-Proof Wall Mounted Fluorescent, (2) 48", Super T-8 lamp, Instant Start Ballast, NLO (BF: .85-.95) Prismatic Acrylic Diffuser	7	24	Wall Mounted T8 LED Retrofit Lamp with External Driver LED 4' T8 Lamp (2) 12W Lamps			5824	0.30	0.17	1,766	969	-	GE 34235 LEDT8/LC/G/4/840	GE 21378 LED/DR/D2L/LW	-
416	F Block B Side	F Block B Side Dayroom	1	43	4' Wraparound; Tamper-Proof Wall Mounted Fluorescent, (2) 48", Super T-8 lamp, Instant Start Ballast, NLO (BF: .85-.95) Prismatic Acrylic Diffuser	1	24	Wall Mounted T8 LED Retrofit Lamp with External Driver LED 4' T8 Lamp (2) 12W Lamps			5824	0.04	0.02	252	138	-	GE 34235 LEDT8/LC/G/4/840	GE 21378 LED/DR/D2L/LW	-
417	F Block B Side	F Block B Side Dayroom	3	19	Universal Face Exit Sign; Black Surface Mounted Compact Fluorescent, twin, (2) 7W lamp (No Diffuser)	3	2	Surface Mounted Upgrade EXIT Sign LED Light Fixture. (1) 2W			8760	0.06	0.01	498	52	-	TCP 20716 RD LED PADDLE RETRO HARDWIRE	-	-
418	F Block B Side	B1 Cell / Dorm	5	65	4' Wraparound; Tamper-Proof Surface Mounted Fluorescent, (3) 48", Super T-8 lamp, Instant Start Ballast, NLO (BF: .85-.95) Prismatic Acrylic Diffuser	5	36	Surface Mounted T8 LED Retrofit Lamp with External Driver LED 4' T8 Lamp (3) 12W Lamps			2912	0.32	0.18	946	519	-	GE 34235 LEDT8/LC/G/4/840	GE 21379 LED/DR/D4L/LW	-
419	F Block B Side	B2-B12 Cell	11	65	4' Wraparound; Tamper-Proof Surface Mounted Fluorescent, (3) 48", Super T-8 lamp, Instant Start Ballast, NLO (BF: .85-.95) Prismatic Acrylic Diffuser	11	36	Surface Mounted T8 LED Retrofit Lamp with External Driver LED 4' T8 Lamp (3) 12W Lamps			2912	0.71	0.39	2,081	1,142	-	GE 34235 LEDT8/LC/G/4/840	GE 21379 LED/DR/D4L/LW	-
420	F Block B Side	B13 Cell	1	65	4' Wraparound; Tamper-Proof Surface Mounted Fluorescent, (3) 48", Super T-8 lamp, Instant Start Ballast, NLO (BF: .85-.95) Prismatic Acrylic Diffuser	1	36	Surface Mounted T8 LED Retrofit Lamp with External Driver LED 4' T8 Lamp (3) 12W Lamps			2912	0.06	0.04	189	104	-	GE 34235 LEDT8/LC/G/4/840	GE 21379 LED/DR/D4L/LW	-
421	F Block B Side	B13 Cell	5	43	4' Wraparound; Tamper-Proof Surface Mounted Fluorescent, (2) 48", Super T-8 lamp, Instant Start Ballast, NLO (BF: .85-.95) Prismatic Acrylic Diffuser	5	24	Surface Mounted T8 LED Retrofit Lamp with External Driver LED 4' T8 Lamp (2) 12W Lamps			2912	0.22	0.12	631	346	-	GE 34235 LEDT8/LC/G/4/840	GE 21378 LED/DR/D2L/LW	-
422	F Block B Side	B14-B64	51	65	4' Wraparound; Tamper-Proof Surface Mounted Fluorescent, (3) 48", Super T-8 lamp, Instant Start Ballast, NLO (BF: .85-.95) Prismatic Acrylic Diffuser	51	36	Surface Mounted T8 LED Retrofit Lamp with External Driver LED 4' T8 Lamp (3) 12W Lamps			2912	3.31	1.82	9,650	5,293	-	GE 34235 LEDT8/LC/G/4/840	GE 21379 LED/DR/D4L/LW	-
423	F Block B Side	Supply Storage Room (between A24 and A25	1	87	4' Wraparound Recessed Fluorescent, (4) 48", Super T-8 lamp, Instant Start Ballast, NLO (BF: .85-.95) (No Diffuser)	1	48	Recessed T8 LED Retrofit Lamp with External Driver LED 4' T8 Lamp (4) 12W Lamps			200	0.09	0.05	17	10	-	GE 34235 LEDT8/LC/G/4/840	GE 21379 LED/DR/D4L/LW	-
424	F Block B Side	Upper Shower Area	7	30	2' Wraparound; Tamper-Proof Surface Mounted Fluorescent, (2) 24", T-8 lamp, Instant Start Ballast, NLO (BF: .85-.95) Prismatic Acrylic Diffuser	7	24	Surface Mounted 2' Wraparound; Tamper-Proof LED Light Fixture. (1) 24W			5824	0.21	0.17	1,214	969	COOPER FAILSAFE FVS8P-2-LD4-2LO-40-UNV-P125-EDC1-WL	-	-	-
425	F Block B Side	Lower Shower Area	6	30	2' Wraparound; Tamper-Proof Surface Mounted Fluorescent, (2) 24", T-8 lamp, Instant Start Ballast, NLO (BF: .85-.95) Prismatic Acrylic Diffuser	6	24	Surface Mounted 2' Wraparound; Tamper-Proof LED Light Fixture. (1) 24W			5824	0.18	0.14	1,041	830	COOPER FAILSAFE FVS8P-2-LD4-2LO-40-UNV-P125-EDC1-WL	-	-	-
426	F Block B Side	Lower Shower Area	1	43	4' Wraparound; Tamper-Proof Surface Mounted Fluorescent, (2) 48", Super T-8 lamp, Instant Start Ballast, NLO (BF: .85-.95) Prismatic Acrylic Diffuser	1	46	Surface Mounted 4' Wraparound; Tamper-Proof LED Light Fixture. (1) 46W			5824	0.04	0.05	252	265	COOPER FAILSAFE FVS8P-4-LD4-2LO-40-UNV-P125-EDC1-WL	-	-	-
427	F Block B Side	Lower Shower Area	2	65	4' Wraparound; Tamper-Proof Surface Mounted Fluorescent, (3) 48", Super T-8 lamp, Instant Start Ballast, NLO (BF: .85-.95) Prismatic Acrylic Diffuser	2	36	Surface Mounted T8 LED Retrofit Lamp with External Driver LED 4' T8 Lamp (3) 12W Lamps			5824	0.13	0.07	757	415	-	GE 34235 LEDT8/LC/G/4/840	GE 21379 LED/DR/D4L/LW	-
428	F Block B Side	Ice Machine Area	1	43	4' Wraparound; Tamper-Proof Surface Mounted Fluorescent, (2) 48", Super T-8 lamp, Instant Start Ballast, NLO (BF: .85-.95) Prismatic Acrylic Diffuser	1	24	Surface Mounted T8 LED Retrofit Lamp with External Driver LED 4' T8 Lamp (2) 12W Lamps			5824	0.04	0.02	252	138	-	GE 34235 LEDT8/LC/G/4/840	GE 21378 LED/DR/D2L/LW	-

Line #	Facility Area	Space	Pre Fixture Qty	Pre Watts/ Fixt	Pre Description	Post Fixture Qty	Post Watt/ Fixt	Post Description	Wallswitch Sensor	Ceiling Sensor	Hours of Operation	Base kW	Proposed kW	Base kWh	Proposed kWh	Luminaire Part #	Lamp Part #	Driver Part#	Misc. Parts
429	F Block B Side	Inmate Restroom	1	43	4' Wraparound; Tamper-Proof Surface Mounted Fluorescent, (2) 48", Super T-8 lamp, Instant Start Ballast, NLO (BF: .85-.95) Prismatic Acrylic Diffuser	1	24	Surface Mounted T8 LED Retrofit Lamp with External Driver LED 4' T8 Lamp (2) 12W Lamps			1456	0.04	0.02	63	35	-	GE 34235 LEDT8/LC/G/4/840	GE 21378 LED/DR/D2L/LW	-
430	F Block B Side	Custodial Supply	1	30	2' Wraparound; Tamper-Proof Surface Mounted Fluorescent, (2) 24", T-8 lamp, Instant Start Ballast, NLO (BF: .85-.95) Prismatic Acrylic Diffuser	1	16	Surface Mounted T8 LED Retrofit Lamp with External Driver LED 2' T8 Lamp (2) 8W Lamps			1560	0.03	0.02	46	25	-	GE 36409 LEDT8/LC/G/2/840	GE 21378 LED/DR/D2L/LW	-
431	F Block B Side	Custodial Supply	2	43	4' Wraparound; Tamper-Proof Surface Mounted Fluorescent, (2) 48", Super T-8 lamp, Instant Start Ballast, NLO (BF: .85-.95) Prismatic Acrylic Diffuser	2	24	Surface Mounted T8 LED Retrofit Lamp with External Driver LED 4' T8 Lamp (2) 12W Lamps			1560	0.09	0.05	135	74	-	GE 34235 LEDT8/LC/G/4/840	GE 21378 LED/DR/D2L/LW	-
432	F Block B Side	Custodial Supply	3	43	4' Industrial Surface Mounted Fluorescent, (2) 48", Super T-8 lamp, Instant Start Ballast, NLO (BF: .85-.95) (No Diffuser)	3	24	Surface Mounted T8 LED Retrofit Lamp with External Driver LED 4' T8 Lamp (2) 12W Lamps			1560	0.13	0.07	203	111	-	GE 34235 LEDT8/LC/G/4/840	GE 21378 LED/DR/D2L/LW	-
433	F Block B Side	Pipe Chase	1	43	4' Industrial Surface Mounted Fluorescent, (2) 48", Super T-8 lamp, Instant Start Ballast, NLO (BF: .85-.95) (No Diffuser)	1	24	Surface Mounted T8 LED Retrofit Lamp with External Driver LED 4' T8 Lamp (2) 12W Lamps			200	0.04	0.02	9	5	-	GE 34235 LEDT8/LC/G/4/840	GE 21378 LED/DR/D2L/LW	-
434	F Block B Side	F block B Side Stairwell	2	43	4' Wraparound; Tamper-Proof Surface Mounted Fluorescent, (2) 48", Super T-8 lamp, Instant Start Ballast, NLO (BF: .85-.95) Prismatic Acrylic Diffuser	2	24	Surface Mounted T8 LED Retrofit Lamp with External Driver LED 4' T8 Lamp (2) 12W Lamps			8760	0.09	0.05	759	416	-	GE 34235 LEDT8/LC/G/4/840	GE 21378 LED/DR/D2L/LW	-
435	F Block B Side	F block B Side Stairwell	2	43	4' Wraparound; Tamper-Proof Wall Mounted Fluorescent, (2) 48", Super T-8 lamp, Instant Start Ballast, NLO (BF: .85-.95) Prismatic Acrylic Diffuser	2	24	Wall Mounted T8 LED Retrofit Lamp with External Driver LED 4' T8 Lamp (2) 12W Lamps			8760	0.09	0.05	759	416	-	GE 34235 LEDT8/LC/G/4/840	GE 21378 LED/DR/D2L/LW	-
436	F Block B Side	F block B Side Stairwell	1	19	Universal Face Exit Sign; Black Surface Mounted Compact Fluorescent, twin, (2) 7W lamp (No Diffuser)	1	2	Surface Mounted Upgrade EXIT Sign LED Light Fixture. (1) 2W			8760	0.02	0.00	166	17	-	TCP 20716 RD LED PADDLE RETRO HARDWIRE	-	-
437	I Block Common Area	I block common Corridor	4	60	1'x1' Square Recessed Flanged Compact Fluorescent, quad, (2) 26W lamp Prismatic Acrylic Diffuser	4	14	Recessed Flanged Install LED Plug-in Lamp; Bypass and Remove Existing Ballast. Light Emitting Diode Lamp, Screw-in, (2) 8W lamp			200	0.24	0.06	48	12	-	Hylite HL-OB-8W-G24-40K	-	-
438	I Block Common Area	Control Vestibule	1	60	1'x1' Square Recessed Flanged Compact Fluorescent, quad, (2) 26W lamp Prismatic Acrylic Diffuser	1	14	Recessed Flanged Install LED Plug-in Lamp; Bypass and Remove Existing Ballast. Light Emitting Diode Lamp, Screw-in, (2) 8W lamp			8760	0.06	0.01	522	126	-	Hylite HL-OB-8W-G24-40K	-	-
439	I Block Common Area	Staff Restroom	1	60	1'x1' Square Recessed Flanged Compact Fluorescent, quad, (2) 26W lamp Prismatic Acrylic Diffuser	1	14	Recessed Flanged Install LED Plug-in Lamp; Bypass and Remove Existing Ballast. Light Emitting Diode Lamp, Screw-in, (2) 8W lamp			1456	0.06	0.01	87	21	-	Hylite HL-OB-8W-G24-40K	-	-
440	I Block Common Area	Control Room	3	87	2'x4' Troffer Recessed Fluorescent, (4) 48", Super T-8 lamp, Instant Start Ballast, NLO (BF: .85-.95) Deep Cell Parabolic Diffuser	3	26	Recessed 2'x4' Troffer LED Light Fixture. (1) 26W			200	0.26	0.08	52	15	GE LPL24B04XMM840VQLTW	-	-	-
441	I Block Common Area	Control Room	2	60	1'x1' Square Recessed Flanged Compact Fluorescent, quad, (2) 26W lamp Prismatic Acrylic Diffuser	2	14	Recessed Flanged Install LED Plug-in Lamp; Bypass and Remove Existing Ballast. Light Emitting Diode Lamp, Screw-in, (2) 8W lamp			200	0.12	0.03	24	6	-	Hylite HL-OB-8W-G24-40K	-	-
442	I Block A Side	A side Entry	1	65	1'x4' Troffer; Tamper Proof Recessed Flanged Fluorescent, (3) 48", Super T-8 lamp, Instant Start Ballast, NLO (BF: .85-.95) Prismatic Acrylic Diffuser	1	36	Recessed Flanged T8 LED Retrofit Lamp with External Driver LED 4' T8 Lamp (3) 12W Lamps			8760	0.06	0.04	569	312	-	GE 34235 LEDT8/LC/G/4/840	GE 21379 LED/DR/D4L/LW	-
443	I Block A Side	I block A side Dayroom	9	61	2'x2' Box Luminaire Surface Mounted Compact Fluorescent, spiral, (1) 68W lamp Prismatic Acrylic Diffuser	9	49	Surface Mounted Chip On Board (COB) Type Screw-in / Bypass Existing Ballast Light Emitting Diode Lamp, Screw-in, (1) 54W lamp			5824	0.55	0.44	3,217	2,547	-	KEYSTONE KT-LED54HID-EX39-840-D	-	-
444	I Block A Side	I block A side Dayroom	44	87	2'x4' Troffer Surface Mounted Fluorescent, (4) 48", Super T-8 lamp, Instant Start Ballast, NLO (BF: .85-.95) Prismatic Acrylic Diffuser	44	48	Surface Mounted T8 LED Retrofit Lamp with External Driver LED 4' T8 Lamp (4) 12W Lamps			5824	3.81	2.09	22,202	12,177	-	GE 34235 LEDT8/LC/G/4/840	GE 21379 LED/DR/D4L/LW	-
445	I Block A Side	I block A side Dayroom	2	19	Universal Face Exit Sign; Black Surface Mounted Compact Fluorescent, twin, (2) 7W lamp (No Diffuser)	2	2	Surface Mounted Upgrade EXIT Sign LED Light Fixture. (1) 2W			8760	0.04	0.00	332	35	-	TCP 20716 RD LED PADDLE RETRO HARDWIRE	-	-
446	I Block A Side	A1-A64 Cells	64	43	4' Corner Mount Wall Vanity; Tamper-Proof Wall Mounted Fluorescent, (2) 48", Super T-8 lamp, Instant Start Ballast, NLO (BF: .85-.95) Prismatic Acrylic Diffuser	64	24	Wall Mounted T8 LED Retrofit Lamp with External Driver LED 4' T8 Lamp (2) 12W Lamps			2912	2.77	1.52	8,073	4,428	-	GE 34235 LEDT8/LC/G/4/840	GE 21378 LED/DR/D2L/LW	-
447	I Block A Side	Upper / Lower Showers	4	65	1'x4' Troffer; Tamper Proof Surface Mounted Fluorescent, (3) 48", Super T-8 lamp, Instant Start Ballast, NLO (BF: .85-.95) Prismatic Acrylic Diffuser	4	36	Surface Mounted T8 LED Retrofit Lamp with External Driver LED 4' T8 Lamp (3) 12W Lamps			5824	0.26	0.14	1,514	830	-	GE 34235 LEDT8/LC/G/4/840	GE 21379 LED/DR/D4L/LW	-
448	I Block A Side	Custodial Supply	2	65	1'x4' Troffer; Tamper Proof Surface Mounted Fluorescent, (3) 48", Super T-8 lamp, Instant Start Ballast, NLO (BF: .85-.95) Prismatic Acrylic Diffuser	2	36	Surface Mounted T8 LED Retrofit Lamp with External Driver LED 4' T8 Lamp (3) 12W Lamps			1560	0.13	0.07	203	111	-	GE 34235 LEDT8/LC/G/4/840	GE 21379 LED/DR/D4L/LW	-
449	I Block A Side	Custodial Supply Equipment	1	30	2'x2' Troffer Surface Mounted Fluorescent, (2) 24", T-8 lamp, Instant Start Ballast, NLO (BF: .85-.95) Prismatic Acrylic Diffuser	1	16	Surface Mounted T8 LED Retrofit Lamp with External Driver LED 2' T8 Lamp (2) 8W Lamps			1560	0.03	0.02	46	25	-	GE 36409 LEDT8/LC/G/2/840	GE 21378 LED/DR/D2L/LW	-
450	I Block A Side	Lawn Equipment Storage Room	1	30	2'x2' Troffer Surface Mounted Fluorescent, (2) 24", T-8 lamp, Instant Start Ballast, NLO (BF: .85-.95) Prismatic Acrylic Diffuser	1	16	Surface Mounted T8 LED Retrofit Lamp with External Driver LED 2' T8 Lamp (2) 8W Lamps			520	0.03	0.02	15	8	-	GE 36409 LEDT8/LC/G/2/840	GE 21378 LED/DR/D2L/LW	-
451	I Block A Side	Book Storage / Group Room	4	65	1'x4' Troffer; Tamper Proof Surface Mounted Fluorescent, (3) 48", Super T-8 lamp, Instant Start Ballast, NLO (BF: .85-.95) Prismatic Acrylic Diffuser	4	36	Surface Mounted T8 LED Retrofit Lamp with External Driver LED 4' T8 Lamp (3) 12W Lamps			520	0.26	0.14	135	74	-	GE 34235 LEDT8/LC/G/4/840	GE 21379 LED/DR/D4L/LW	-
452	I Block A Side	Office	4	65	1'x4' Troffer; Tamper Proof Recessed Flanged Fluorescent, (3) 48", Super T-8 lamp, Instant Start Ballast, NLO (BF: .85-.95) Prismatic Acrylic Diffuser	4	36	Recessed Flanged T8 LED Retrofit Lamp with External Driver LED 4' T8 Lamp (3) 12W Lamps			3640	0.26	0.14	946	519	-	GE 34235 LEDT8/LC/G/4/840	GE 21379 LED/DR/D4L/LW	-
453	I Block A Side	Upper Psychology Office	2	65	2'x4' Troffer Recessed Fluorescent, (3) 48", Super T-8 lamp, Instant Start Ballast, NLO (BF: .85-.95) Prismatic Acrylic Diffuser	2	26	Recessed 2'x4' Troffer LED Light Fixture. (1) 26W			1560	0.13	0.05	203	80	GE LPL24B04XMM840VQLTW	-	-	-
454	I Block A Side	Upper Equipment Storage	1	60	1'x1' Square Recessed Flanged Compact Fluorescent, quad, (2) 26W lamp Prismatic Acrylic Diffuser	1	14	Recessed Flanged Install LED Plug-in Lamp; Bypass and Remove Existing Ballast. Light Emitting Diode Lamp, Screw-in, (2) 8W lamp			520	0.06	0.01	31	7	-	Hylite HL-OB-8W-G24-40K	-	-
455	I Block A Side	Upper Storage Room	1	60	1'x1' Square Recessed Flanged Compact Fluorescent, quad, (2) 26W lamp Prismatic Acrylic Diffuser	1	14	Recessed Flanged Install LED Plug-in Lamp; Bypass and Remove Existing Ballast. Light Emitting Diode Lamp, Screw-in, (2) 8W lamp			520	0.06	0.01	31	7	-	Hylite HL-OB-8W-G24-40K	-	-
456	I Block A Side	Upper Storage Room	1	60	1'x1' Square Recessed Flanged Compact Fluorescent, quad, (2) 26W lamp Prismatic Acrylic Diffuser	1	14	Recessed Flanged Install LED Plug-in Lamp; Bypass and Remove Existing Ballast. Light Emitting Diode Lamp, Screw-in, (2) 8W lamp			520	0.06	0.01	31	7	-	Hylite HL-OB-8W-G24-40K	-	-
457	I Block A Side	Upper Group Room	4	65	1'x4' Troffer; Tamper Proof Recessed Flanged Fluorescent, (3) 48", Super T-8 lamp, Instant Start Ballast, NLO (BF: .85-.95) Prismatic Acrylic Diffuser	4	36	Recessed Flanged T8 LED Retrofit Lamp with External Driver LED 4' T8 Lamp (3) 12W Lamps			520	0.26	0.14	135	74	-	GE 34235 LEDT8/LC/G/4/840	GE 21379 LED/DR/D4L/LW	-
458	I Block A Side	Upper Electrical Room	2	87	2'x4' Troffer Surface Mounted Fluorescent, (4) 48", Super T-8 lamp, Instant Start Ballast, NLO (BF: .85-.95) Prismatic Acrylic Diffuser	2	48	Surface Mounted T8 LED Retrofit Lamp with External Driver LED 4' T8 Lamp (4) 12W Lamps			520	0.17	0.10	90	49	-	GE 34235 LEDT8/LC/G/4/840	GE 21379 LED/DR/D4L/LW	-
459	I Block A Side	Upper Loft Mechanical	2	65	1'x4' Troffer; Tamper Proof Surface Mounted Fluorescent, (3) 48", Super T-8 lamp, Instant Start Ballast, NLO (BF: .85-.95) Prismatic Acrylic Diffuser	2	36	Surface Mounted T8 LED Retrofit Lamp with External Driver LED 4' T8 Lamp (3) 12W Lamps			200	0.13	0.07	26	14	-	GE 34235 LEDT8/LC/G/4/840	GE 21379 LED/DR/D4L/LW	-
460	I Block A Side	Upper Loft Mechanical (behind showers)	2	65	1'x4' Troffer; Tamper Proof Surface Mounted Fluorescent, (3) 48", Super T-8 lamp, Instant Start Ballast, NLO (BF: .85-.95) Prismatic Acrylic Diffuser	2	36	Surface Mounted T8 LED Retrofit Lamp with External Driver LED 4' T8 Lamp (3) 12W Lamps			200	0.13	0.07	26	14	-	GE 34235 LEDT8/LC/G/4/840	GE 21379 LED/DR/D4L/LW	-
461	I Block A Side	Outside Mechanical	2	43	4' Corner Mount Wall Vanity; Tamper-Proof Wall Mounted Fluorescent, (2) 48", Super T-8 lamp, Instant Start Ballast, NLO (BF: .85-.95) Prismatic Acrylic Diffuser	2	24	Wall Mounted T8 LED Retrofit Lamp with External Driver LED 4' T8 Lamp (2) 12W Lamps			200	0.09	0.05	17	10	-	GE 34235 LEDT8/LC/G/4/840	GE 21378 LED/DR/D2L/LW	-
462	I Block A Side	Outside Mechanical	2	65	1'x4' Troffer; Tamper Proof Surface Mounted Fluorescent, (3) 48", Super T-8 lamp, Instant Start Ballast, NLO (BF: .85-.95) Prismatic Acrylic Diffuser	2	36	Surface Mounted T8 LED Retrofit Lamp with External Driver LED 4' T8 Lamp (3) 12W Lamps			200	0.13	0.07	26	14	-	GE 34235 LEDT8/LC/G/4/840	GE 21379 LED/DR/D4L/LW	-
463	I Block B Side	B side Entry	1	65	1'x4' Troffer; Tamper Proof Recessed Flanged Fluorescent, (3) 48", Super T-8 lamp, Instant Start Ballast, NLO (BF: .85-.95) Prismatic Acrylic Diffuser	1	36	Recessed Flanged T8 LED Retrofit Lamp with External Driver LED 4' T8 Lamp (3) 12W Lamps			8760	0.06	0.04	569	312	-	GE 34235 LEDT8/LC/G/4/840	GE 21379 LED/DR/D4L/LW	-
464	I Block B Side	I block B side Dayroom	9	61	2'x2' Box Luminaire Surface Mounted Compact Fluorescent, spiral, (1) 68W lamp Prismatic Acrylic Diffuser	9	49	Surface Mounted Chip On Board (COB) Type Screw-in / Bypass Existing Ballast Light Emitting Diode Lamp, Screw-in, (1) 54W lamp			5824	0.55	0.44	3,217	2,547	-	KEYSTONE KT-LED54HID-EX39-840-D	-	-
465	I Block B Side	I block B side Dayroom	44	87	2'x4' Troffer Surface Mounted Fluorescent, (4) 48", Super T-8 lamp, Instant Start Ballast, NLO (BF: .85-.95) Prismatic Acrylic Diffuser	44	48	Surface Mounted T8 LED Retrofit Lamp with External Driver LED 4' T8 Lamp (4) 12W Lamps			5824	3.81	2.09	22,202	12,177	-	GE 34235 LEDT8/LC/G/4/840	GE 21379 LED/DR/D4L/LW	-
466	I Block B Side	I block B side Dayroom	2	19	Universal Face Exit Sign; Black Surface Mounted Compact Fluorescent, twin, (2) 7W lamp (No Diffuser)	2	2	Surface Mounted Upgrade EXIT Sign LED Light Fixture. (1) 2W			8760	0.04	0.00	332	35	-	TCP 20716 RD LED PADDLE RETRO HARDWIRE	-	-
467	I Block B Side	B1-B64 Cells	64	43	4' Corner Mount Wall Vanity; Tamper-Proof Wall Mounted Fluorescent, (2) 48", Super T-8 lamp, Instant Start Ballast, NLO (BF: .85-.95) Prismatic Acrylic Diffuser	64	24	Wall Mounted T8 LED Retrofit Lamp with External Driver LED 4' T8 Lamp (2) 12W Lamps			2912	2.77	1.52	8,073	4,428	-	GE 34235 LEDT8/LC/G/4/840	GE 21378 LED/DR/D2L/LW	-

Line #	Facility Area	Space	Pre Fixture Qty	Pre Watts/ Fixt	Pre Description	Post Fixture Qty	Post Watt/ Fixt	Post Description	Wallswitch Sensor	Ceiling Sensor	Hours of Operation	Base kW	Proposed kW	Base kWh	Proposed kWh	Luminaire Part #	Lamp Part #	Driver Part#	Misc. Parts
468	I Block B Side	Upper / Lower Showers	4	65	1'x4' Troffer; Tamper Proof Surface Mounted Fluorescent, (3) 48", Super T-8 lamp, Instant Start Ballast, NLO (BF: .85-.95) Prismatic Acrylic Diffuser	4	36	Surface Mounted T8 LED Retrofit Lamp with External Driver LED 4' T8 Lamp (3) 12W Lamps			5824	0.26	0.14	1,514	830	-	GE 34235 LEDT8/LC/G/4/840	GE 21379 LED/DR/D4L/LW	-
469	I Block B Side	Custodial Supply	2	65	1'x4' Troffer; Tamper Proof Surface Mounted Fluorescent, (3) 48", Super T-8 lamp, Instant Start Ballast, NLO (BF: .85-.95) Prismatic Acrylic Diffuser	2	36	Surface Mounted T8 LED Retrofit Lamp with External Driver LED 4' T8 Lamp (3) 12W Lamps			1560	0.13	0.07	203	111	-	GE 34235 LEDT8/LC/G/4/840	GE 21379 LED/DR/D4L/LW	-
470	I Block B Side	Custodial Supply Equipment	1	30	2'x2' Troffer Surface Mounted Fluorescent, (2) 24", T-8 lamp, Instant Start Ballast, NLO (BF: .85-.95) Prismatic Acrylic Diffuser	1	16	Surface Mounted T8 LED Retrofit Lamp with External Driver LED 2' T8 Lamp (2) 8W Lamps			1560	0.03	0.02	46	25	-	GE 36409 LEDT8/LC/G/2/840	GE 21378 LED/DR/D2L/LW	-
471	I Block B Side	Lawn Equipment Storage Room	1	30	2'x2' Troffer Surface Mounted Fluorescent, (2) 24", T-8 lamp, Instant Start Ballast, NLO (BF: .85-.95) Prismatic Acrylic Diffuser	1	16	Surface Mounted T8 LED Retrofit Lamp with External Driver LED 2' T8 Lamp (2) 8W Lamps			520	0.03	0.02	15	8	-	GE 36409 LEDT8/LC/G/2/840	GE 21378 LED/DR/D2L/LW	-
472	I Block B Side	Book Storage / Group Room	4	65	1'x4' Troffer; Tamper Proof Surface Mounted Fluorescent, (3) 48", Super T-8 lamp, Instant Start Ballast, NLO (BF: .85-.95) Prismatic Acrylic Diffuser	4	36	Surface Mounted T8 LED Retrofit Lamp with External Driver LED 4' T8 Lamp (3) 12W Lamps			520	0.26	0.14	135	74	-	GE 34235 LEDT8/LC/G/4/840	GE 21379 LED/DR/D4L/LW	-
473	I Block B Side	Office	4	65	1'x4' Troffer; Tamper Proof Recessed Flanged Fluorescent, (3) 48", Super T-8 lamp, Instant Start Ballast, NLO (BF: .85-.95) Prismatic Acrylic Diffuser	4	36	Recessed Flanged T8 LED Retrofit Lamp with External Driver LED 4' T8 Lamp (3) 12W Lamps			3640	0.26	0.14	946	519	-	GE 34235 LEDT8/LC/G/4/840	GE 21379 LED/DR/D4L/LW	-
474	I Block B Side	Upper Psychology Office	2	65	2'x4' Troffer Recessed Fluorescent, (3) 48", Super T-8 lamp, Instant Start Ballast, NLO (BF: .85-.95) Prismatic Acrylic Diffuser	2	26	Recessed 2'x4' Troffer LED Light Fixture. (1) 26W			1560	0.13	0.05	203	80	GE LPL24B04XMM840VQLTW	-	-	-
475	I Block B Side	Upper Equipment Storage	1	60	1'x1' Square Recessed Flanged Compact Fluorescent, quad, (2) 26W lamp Prismatic Acrylic Diffuser	1	14	Recessed Flanged Install LED Plug-in Lamp; Bypass and Remove Existing Ballast. Light Emitting Diode Lamp, Screw-in, (2) 8W lamp			520	0.06	0.01	31	7	-	Hylite HL-OB-8W-G24-40K	-	-
476	I Block B Side	Upper Storage Room	1	60	1'x1' Square Recessed Flanged Compact Fluorescent, quad, (2) 26W lamp Prismatic Acrylic Diffuser	1	14	Recessed Flanged Install LED Plug-in Lamp; Bypass and Remove Existing Ballast. Light Emitting Diode Lamp, Screw-in, (2) 8W lamp			520	0.06	0.01	31	7	-	Hylite HL-OB-8W-G24-40K	-	-
477	I Block B Side	Upper Storage Room	1	60	1'x1' Square Recessed Flanged Compact Fluorescent, quad, (2) 26W lamp Prismatic Acrylic Diffuser	1	14	Recessed Flanged Install LED Plug-in Lamp; Bypass and Remove Existing Ballast. Light Emitting Diode Lamp, Screw-in, (2) 8W lamp			520	0.06	0.01	31	7	-	Hylite HL-OB-8W-G24-40K	-	-
478	I Block B Side	Upper Group Room	4	65	1'x4' Troffer; Tamper Proof Recessed Flanged Fluorescent, (3) 48", Super T-8 lamp, Instant Start Ballast, NLO (BF: .85-.95) Prismatic Acrylic Diffuser	4	36	Recessed Flanged T8 LED Retrofit Lamp with External Driver LED 4' T8 Lamp (3) 12W Lamps			520	0.26	0.14	135	74	-	GE 34235 LEDT8/LC/G/4/840	GE 21379 LED/DR/D4L/LW	-
479	I Block B Side	Upper Mechanical Room	3	87	2'x4' Troffer Surface Mounted Fluorescent, (4) 48", Super T-8 lamp, Instant Start Ballast, NLO (BF: .85-.95) Prismatic Acrylic Diffuser	3	48	Surface Mounted T8 LED Retrofit Lamp with External Driver LED 4' T8 Lamp (4) 12W Lamps			520	0.26	0.14	135	74	-	GE 34235 LEDT8/LC/G/4/840	GE 21379 LED/DR/D4L/LW	-
480	I Block B Side	Upper Loft Mechanical	2	65	1'x4' Troffer; Tamper Proof Surface Mounted Fluorescent, (3) 48", Super T-8 lamp, Instant Start Ballast, NLO (BF: .85-.95) Prismatic Acrylic Diffuser	2	36	Surface Mounted T8 LED Retrofit Lamp with External Driver LED 4' T8 Lamp (3) 12W Lamps			200	0.13	0.07	26	14	-	GE 34235 LEDT8/LC/G/4/840	GE 21379 LED/DR/D4L/LW	-
481	I Block B Side	Upper Loft Data Room	3	65	1'x4' Troffer; Tamper Proof Surface Mounted Fluorescent, (3) 48", Super T-8 lamp, Instant Start Ballast, NLO (BF: .85-.95) Prismatic Acrylic Diffuser	3	36	Surface Mounted T8 LED Retrofit Lamp with External Driver LED 4' T8 Lamp (3) 12W Lamps			520	0.19	0.11	101	56	-	GE 34235 LEDT8/LC/G/4/840	GE 21379 LED/DR/D4L/LW	-
482	I Block B Side	Upper Loft Mechanical (behind showers)	2	65	1'x4' Troffer; Tamper Proof Surface Mounted Fluorescent, (3) 48", Super T-8 lamp, Instant Start Ballast, NLO (BF: .85-.95) Prismatic Acrylic Diffuser	2	36	Surface Mounted T8 LED Retrofit Lamp with External Driver LED 4' T8 Lamp (3) 12W Lamps			200	0.13	0.07	26	14	-	GE 34235 LEDT8/LC/G/4/840	GE 21379 LED/DR/D4L/LW	-
483	I Block B Side	Outside Mechanical	2	43	4' Corner Mount Wall Vanity; Tamper-Proof Wall Mounted Fluorescent, (2) 48", Super T-8 lamp, Instant Start Ballast, NLO (BF: .85-.95) Prismatic Acrylic Diffuser	2	24	Wall Mounted T8 LED Retrofit Lamp with External Driver LED 4' T8 Lamp (2) 12W Lamps			200	0.09	0.05	17	10	-	GE 34235 LEDT8/LC/G/4/840	GE 21378 LED/DR/D2L/LW	-
484	I Block B Side	Outside Mechanical	2	65	1'x4' Troffer; Tamper Proof Surface Mounted Fluorescent, (3) 48", Super T-8 lamp, Instant Start Ballast, NLO (BF: .85-.95) Prismatic Acrylic Diffuser	2	36	Surface Mounted T8 LED Retrofit Lamp with External Driver LED 4' T8 Lamp (3) 12W Lamps			200	0.13	0.07	26	14	-	GE 34235 LEDT8/LC/G/4/840	GE 21379 LED/DR/D4L/LW	-
485	J Block Common Area	I block common Corridor	4	60	1'x1' Square Recessed Flanged Compact Fluorescent, quad, (2) 26W lamp Prismatic Acrylic Diffuser	4	14	Recessed Flanged Install LED Plug-in Lamp; Bypass and Remove Existing Ballast. Light Emitting Diode Lamp, Screw-in, (2) 8W lamp			200	0.24	0.06	48	12	-	Hylite HL-OB-8W-G24-40K	-	-
486	J Block Common Area	Control Vestibule	1	60	1'x1' Square Recessed Flanged Compact Fluorescent, quad, (2) 26W lamp Prismatic Acrylic Diffuser	1	14	Recessed Flanged Install LED Plug-in Lamp; Bypass and Remove Existing Ballast. Light Emitting Diode Lamp, Screw-in, (2) 8W lamp			8760	0.06	0.01	522	126	-	Hylite HL-OB-8W-G24-40K	-	-
487	J Block Common Area	Staff Restroom	1	60	1'x1' Square Recessed Flanged Compact Fluorescent, quad, (2) 26W lamp Prismatic Acrylic Diffuser	1	14	Recessed Flanged Install LED Plug-in Lamp; Bypass and Remove Existing Ballast. Light Emitting Diode Lamp, Screw-in, (2) 8W lamp			1456	0.06	0.01	87	21	-	Hylite HL-OB-8W-G24-40K	-	-
488	J Block Common Area	Control Room	3	87	2'x4' Troffer Recessed Fluorescent, (4) 48", Super T-8 lamp, Instant Start Ballast, NLO (BF: .85-.95) Deep Cell Parabolic Diffuser	3	26	Recessed 2'x4' Troffer LED Light Fixture. (1) 26W			200	0.26	0.08	52	15	GE LPL24B04XMM840VQLTW	-	-	-
489	J Block Common Area	Control Room	2	60	1'x1' Square Recessed Flanged Compact Fluorescent, quad, (2) 26W lamp Prismatic Acrylic Diffuser	2	14	Recessed Flanged Install LED Plug-in Lamp; Bypass and Remove Existing Ballast. Light Emitting Diode Lamp, Screw-in, (2) 8W lamp			200	0.12	0.03	24	6	-	Hylite HL-OB-8W-G24-40K	-	-
490	J Block A Side	A side Entry	1	65	1'x4' Troffer; Tamper Proof Recessed Flanged Fluorescent, (3) 48", Super T-8 lamp, Instant Start Ballast, NLO (BF: .85-.95) Prismatic Acrylic Diffuser	1	36	Recessed Flanged T8 LED Retrofit Lamp with External Driver LED 4' T8 Lamp (3) 12W Lamps			8760	0.06	0.04	569	312	-	GE 34235 LEDT8/LC/G/4/840	GE 21379 LED/DR/D4L/LW	-
491	J Block A Side	J block A side Dayroom	9	61	2'x2' Box Luminaire Surface Mounted Compact Fluorescent, spiral, (1) 68W lamp Prismatic Acrylic Diffuser	9	49	Surface Mounted Chip On Board (COB) Type Screw-in / Bypass Existing Ballast Light Emitting Diode Lamp, Screw-in, (1) 54W lamp			5824	0.55	0.44	3,217	2,547	-	KEYSTONE KT-LED54HID-EX39-840-D	-	-
492	J Block A Side	I block B side Dayroom	44	87	2'x4' Troffer Surface Mounted Fluorescent, (4) 48", Super T-8 lamp, Instant Start Ballast, NLO (BF: .85-.95) Prismatic Acrylic Diffuser	44	48	Surface Mounted T8 LED Retrofit Lamp with External Driver LED 4' T8 Lamp (4) 12W Lamps			5824	3.81	2.09	22,202	12,177	-	GE 34235 LEDT8/LC/G/4/840	GE 21379 LED/DR/D4L/LW	-
493	J Block A Side	I block B side Dayroom	2	19	Universal Face Exit Sign; Black Surface Mounted Compact Fluorescent, twin, (2) 7W lamp (No Diffuser)	2	2	Surface Mounted Upgrade EXIT Sign LED Light Fixture. (1) 2W			8760	0.04	0.00	332	35	-	TCP 20716 RD LED PADDLE RETRO HARDWIRE	-	-
494	J Block A Side	A1-A64 Cells	64	43	4' Corner Mount Wall Vanity; Tamper-Proof Wall Mounted Fluorescent, (2) 48", Super T-8 lamp, Instant Start Ballast, NLO (BF: .85-.95) Prismatic Acrylic Diffuser	64	24	Wall Mounted T8 LED Retrofit Lamp with External Driver LED 4' T8 Lamp (2) 12W Lamps			2912	2.77	1.52	8,073	4,428	-	GE 34235 LEDT8/LC/G/4/840	GE 21378 LED/DR/D2L/LW	-
495	J Block A Side	Upper / Lower Showers	4	65	1'x4' Troffer; Tamper Proof Surface Mounted Fluorescent, (3) 48", Super T-8 lamp, Instant Start Ballast, NLO (BF: .85-.95) Prismatic Acrylic Diffuser	4	36	Surface Mounted T8 LED Retrofit Lamp with External Driver LED 4' T8 Lamp (3) 12W Lamps			5824	0.26	0.14	1,514	830	-	GE 34235 LEDT8/LC/G/4/840	GE 21379 LED/DR/D4L/LW	-
496	J Block A Side	Custodial Supply	2	65	1'x4' Troffer; Tamper Proof Surface Mounted Fluorescent, (3) 48", Super T-8 lamp, Instant Start Ballast, NLO (BF: .85-.95) Prismatic Acrylic Diffuser	2	36	Surface Mounted T8 LED Retrofit Lamp with External Driver LED 4' T8 Lamp (3) 12W Lamps			1560	0.13	0.07	203	111	-	GE 34235 LEDT8/LC/G/4/840	GE 21379 LED/DR/D4L/LW	-
497	J Block A Side	Custodial Supply Equipment	1	30	2'x2' Troffer Surface Mounted Fluorescent, (2) 24", T-8 lamp, Instant Start Ballast, NLO (BF: .85-.95) Prismatic Acrylic Diffuser	1	16	Surface Mounted T8 LED Retrofit Lamp with External Driver LED 2' T8 Lamp (2) 8W Lamps			1560	0.03	0.02	46	25	-	GE 36409 LEDT8/LC/G/2/840	GE 21378 LED/DR/D2L/LW	-
498	J Block A Side	Lawn Equipment Storage Room	1	30	2'x2' Troffer Surface Mounted Fluorescent, (2) 24", T-8 lamp, Instant Start Ballast, NLO (BF: .85-.95) Prismatic Acrylic Diffuser	1	16	Surface Mounted T8 LED Retrofit Lamp with External Driver LED 2' T8 Lamp (2) 8W Lamps			520	0.03	0.02	15	8	-	GE 36409 LEDT8/LC/G/2/840	GE 21378 LED/DR/D2L/LW	-
499	J Block A Side	Book Storage / Group Room	4	65	1'x4' Troffer; Tamper Proof Surface Mounted Fluorescent, (3) 48", Super T-8 lamp, Instant Start Ballast, NLO (BF: .85-.95) Prismatic Acrylic Diffuser	4	36	Surface Mounted T8 LED Retrofit Lamp with External Driver LED 4' T8 Lamp (3) 12W Lamps			520	0.26	0.14	135	74	-	GE 34235 LEDT8/LC/G/4/840	GE 21379 LED/DR/D4L/LW	-
500	J Block A Side	Office	4	65	1'x4' Troffer; Tamper Proof Recessed Flanged Fluorescent, (3) 48", Super T-8 lamp, Instant Start Ballast, NLO (BF: .85-.95) Prismatic Acrylic Diffuser	4	36	Recessed Flanged T8 LED Retrofit Lamp with External Driver LED 4' T8 Lamp (3) 12W Lamps			3640	0.26	0.14	946	519	-	GE 34235 LEDT8/LC/G/4/840	GE 21379 LED/DR/D4L/LW	-
501	J Block A Side	Upper Psychology Office	2	65	2'x4' Troffer Recessed Fluorescent, (3) 48", Super T-8 lamp, Instant Start Ballast, NLO (BF: .85-.95) Prismatic Acrylic Diffuser	2	26	Recessed 2'x4' Troffer LED Light Fixture. (1) 26W			1560	0.13	0.05	203	80	GE LPL24B04XMM840VQLTW	-	-	-
502	J Block A Side	Upper Equipment Storage	1	60	1'x1' Square Recessed Flanged Compact Fluorescent, quad, (2) 26W lamp Prismatic Acrylic Diffuser	1	14	Recessed Flanged Install LED Plug-in Lamp; Bypass and Remove Existing Ballast. Light Emitting Diode Lamp, Screw-in, (2) 8W lamp			520	0.06	0.01	31	7	-	Hylite HL-OB-8W-G24-40K	-	-
503	J Block A Side	Upper Storage Room	1	60	1'x1' Square Recessed Flanged Compact Fluorescent, quad, (2) 26W lamp Prismatic Acrylic Diffuser	1	14	Recessed Flanged Install LED Plug-in Lamp; Bypass and Remove Existing Ballast. Light Emitting Diode Lamp, Screw-in, (2) 8W lamp			520	0.06	0.01	31	7	-	Hylite HL-OB-8W-G24-40K	-	-
504	J Block A Side	Upper Storage Room	1	60	1'x1' Square Recessed Flanged Compact Fluorescent, quad, (2) 26W lamp Prismatic Acrylic Diffuser	1	14	Recessed Flanged Install LED Plug-in Lamp; Bypass and Remove Existing Ballast. Light Emitting Diode Lamp, Screw-in, (2) 8W lamp			520	0.06	0.01	31	7	-	Hylite HL-OB-8W-G24-40K	-	-
505	J Block A Side	Upper Group Room	4	65	1'x4' Troffer; Tamper Proof Recessed Flanged Fluorescent, (3) 48", Super T-8 lamp, Instant Start Ballast, NLO (BF: .85-.95) Prismatic Acrylic Diffuser	4	36	Recessed Flanged T8 LED Retrofit Lamp with External Driver LED 4' T8 Lamp (3) 12W Lamps			520	0.26	0.14	135	74	-	GE 34235 LEDT8/LC/G/4/840	GE 21379 LED/DR/D4L/LW	-
506	J Block A Side	Upper Electrical Room	2	87	2'x4' Troffer Surface Mounted Fluorescent, (4) 48", Super T-8 lamp, Instant Start Ballast, NLO (BF: .85-.95) Prismatic Acrylic Diffuser	2	48	Surface Mounted T8 LED Retrofit Lamp with External Driver LED 4' T8 Lamp (4) 12W Lamps			520	0.17	0.10	90	49	-	GE 34235 LEDT8/LC/G/4/840	GE 21379 LED/DR/D4L/LW	-

Line #	Facility Area	Space	Pre Fixture Qty	Pre Watts/ Fixt	Pre Description	Post Fixture Qty	Post Watt/ Fixt	Post Description	Wallswitch Sensor	Ceiling Sensor	Hours of Operation	Base kW	Proposed kW	Base kWh	Proposed kWh	Luminaire Part #	Lamp Part #	Driver Part#	Misc. Parts
507	J Block A Side	Upper Loft Mechanical	2	65	1'x4' Troffer; Tamper Proof Surface Mounted Fluorescent, (3) 48", Super T-8 lamp, Instant Start Ballast, NLO (BF: .85-.95) Prismatic Acrylic Diffuser	2	36	Surface Mounted T8 LED Retrofit Lamp with External Driver LED 4' T8 Lamp (3) 12W Lamps			200	0.13	0.07	26	14	-	GE 34235 LEDT8/LC/G/4/840	GE 21379 LED/DR/D4L/LW	-
508	J Block A Side	Upper Loft Mechanical (behind showers)	2	65	1'x4' Troffer; Tamper Proof Surface Mounted Fluorescent, (3) 48", Super T-8 lamp, Instant Start Ballast, NLO (BF: .85-.95) Prismatic Acrylic Diffuser	2	36	Surface Mounted T8 LED Retrofit Lamp with External Driver LED 4' T8 Lamp (3) 12W Lamps			200	0.13	0.07	26	14	-	GE 34235 LEDT8/LC/G/4/840	GE 21379 LED/DR/D4L/LW	-
509	J Block A Side	Outside Mechanical	2	43	4' Corner Mount Wall Vanity; Tamper-Proof Wall Mounted Fluorescent, (2) 48", Super T-8 lamp, Instant Start Ballast, NLO (BF: .85-.95) Prismatic Acrylic Diffuser	2	24	Wall Mounted T8 LED Retrofit Lamp with External Driver LED 4' T8 Lamp (2) 12W Lamps			200	0.09	0.05	17	10	-	GE 34235 LEDT8/LC/G/4/840	GE 21378 LED/DR/D2L/LW	-
510	J Block A Side	Outside Mechanical	2	65	1'x4' Troffer; Tamper Proof Surface Mounted Fluorescent, (3) 48", Super T-8 lamp, Instant Start Ballast, NLO (BF: .85-.95) Prismatic Acrylic Diffuser	2	36	Surface Mounted T8 LED Retrofit Lamp with External Driver LED 4' T8 Lamp (3) 12W Lamps			200	0.13	0.07	26	14	-	GE 34235 LEDT8/LC/G/4/840	GE 21379 LED/DR/D4L/LW	-
511	J Block B Side	B side Entry	1	65	1'x4' Troffer; Tamper Proof Recessed Flanged Fluorescent, (3) 48", Super T-8 lamp, Instant Start Ballast, NLO (BF: .85-.95) Prismatic Acrylic Diffuser	1	36	Recessed Flanged T8 LED Retrofit Lamp with External Driver LED 4' T8 Lamp (3) 12W Lamps			8760	0.06	0.04	569	312	-	GE 34235 LEDT8/LC/G/4/840	GE 21379 LED/DR/D4L/LW	-
512	J Block B Side	J block B side Dayroom	9	61	2'x2' Box Luminaire Surface Mounted Compact Fluorescent, spiral, (1) 68W lamp Prismatic Acrylic Diffuser	9	49	Surface Mounted Chip On Board (COB) Type Screw-in / Bypass Existing Ballast Light Emitting Diode Lamp, Screw-in, (1) 54W lamp			5824	0.55	0.44	3,217	2,547	-	KEYSTONE KT-LED54HID-EX39-840-D	-	-
513	J Block B Side	J block B side Dayroom	44	87	2'x4' Troffer Surface Mounted Fluorescent, (4) 48", Super T-8 lamp, Instant Start Ballast, NLO (BF: .85-.95) Prismatic Acrylic Diffuser	44	48	Surface Mounted T8 LED Retrofit Lamp with External Driver LED 4' T8 Lamp (4) 12W Lamps			5824	3.81	2.09	22,202	12,177	-	GE 34235 LEDT8/LC/G/4/840	GE 21379 LED/DR/D4L/LW	-
514	J Block B Side	J block B side Dayroom	2	19	Universal Face Exit Sign; Black Surface Mounted Compact Fluorescent, twin, (2) 7W lamp (No Diffuser)	2	2	Surface Mounted Upgrade EXIT Sign LED Light Fixture. (1) 2W			8760	0.04	0.00	332	35	-	TCP 20716 RD LED PADDLE RETRO HARDWIRE	-	-
515	J Block B Side	B1-B64 Cells	64	43	4' Corner Mount Wall Vanity; Tamper-Proof Wall Mounted Fluorescent, (2) 48", Super T-8 lamp, Instant Start Ballast, NLO (BF: .85-.95) Prismatic Acrylic Diffuser	64	24	Wall Mounted T8 LED Retrofit Lamp with External Driver LED 4' T8 Lamp (2) 12W Lamps			2912	2.77	1.52	8,073	4,428	-	GE 34235 LEDT8/LC/G/4/840	GE 21378 LED/DR/D2L/LW	-
516	J Block B Side	Upper / Lower Showers	4	65	1'x4' Troffer; Tamper Proof Surface Mounted Fluorescent, (3) 48", Super T-8 lamp, Instant Start Ballast, NLO (BF: .85-.95) Prismatic Acrylic Diffuser	4	36	Surface Mounted T8 LED Retrofit Lamp with External Driver LED 4' T8 Lamp (3) 12W Lamps			5824	0.26	0.14	1,514	830	-	GE 34235 LEDT8/LC/G/4/840	GE 21379 LED/DR/D4L/LW	-
517	J Block B Side	Custodial Supply	2	65	1'x4' Troffer; Tamper Proof Surface Mounted Fluorescent, (3) 48", Super T-8 lamp, Instant Start Ballast, NLO (BF: .85-.95) Prismatic Acrylic Diffuser	2	36	Surface Mounted T8 LED Retrofit Lamp with External Driver LED 4' T8 Lamp (3) 12W Lamps			1560	0.13	0.07	203	111	-	GE 34235 LEDT8/LC/G/4/840	GE 21379 LED/DR/D4L/LW	-
518	J Block B Side	Custodial Supply Equipment	1	30	2'x2' Troffer Surface Mounted Fluorescent, (2) 24", T-8 lamp, Instant Start Ballast, NLO (BF: .85-.95) Prismatic Acrylic Diffuser	1	16	Surface Mounted T8 LED Retrofit Lamp with External Driver LED 2' T8 Lamp (2) 8W Lamps			1560	0.03	0.02	46	25	-	GE 36409 LEDT8/LC/G/2/840	GE 21378 LED/DR/D2L/LW	-
519	J Block B Side	Lawn Equipment Storage Room	1	30	2'x2' Troffer Surface Mounted Fluorescent, (2) 24", T-8 lamp, Instant Start Ballast, NLO (BF: .85-.95) Prismatic Acrylic Diffuser	1	16	Surface Mounted T8 LED Retrofit Lamp with External Driver LED 2' T8 Lamp (2) 8W Lamps			520	0.03	0.02	15	8	-	GE 36409 LEDT8/LC/G/2/840	GE 21378 LED/DR/D2L/LW	-
520	J Block B Side	Book Storage / Group Room	4	65	1'x4' Troffer; Tamper Proof Surface Mounted Fluorescent, (3) 48", Super T-8 lamp, Instant Start Ballast, NLO (BF: .85-.95) Prismatic Acrylic Diffuser	4	36	Surface Mounted T8 LED Retrofit Lamp with External Driver LED 4' T8 Lamp (3) 12W Lamps			520	0.26	0.14	135	74	-	GE 34235 LEDT8/LC/G/4/840	GE 21379 LED/DR/D4L/LW	-
521	J Block B Side	Office	4	65	1'x4' Troffer; Tamper Proof Recessed Flanged Fluorescent, (3) 48", Super T-8 lamp, Instant Start Ballast, NLO (BF: .85-.95) Prismatic Acrylic Diffuser	4	36	Recessed Flanged T8 LED Retrofit Lamp with External Driver LED 4' T8 Lamp (3) 12W Lamps			3640	0.26	0.14	946	519	-	GE 34235 LEDT8/LC/G/4/840	GE 21379 LED/DR/D4L/LW	-
522	J Block B Side	Upper Psychology Office	2	65	2'x4' Troffer Recessed Fluorescent, (3) 48", Super T-8 lamp, Instant Start Ballast, NLO (BF: .85-.95) Prismatic Acrylic Diffuser	2	26	Recessed 2'x4' Troffer LED Light Fixture. (1) 26W			1560	0.13	0.05	203	80	GE LPL24B04XMM840VQLTW	-	-	-
523	J Block B Side	Upper Equipment Storage	1	60	1'x1' Square Recessed Flanged Compact Fluorescent, quad, (2) 26W lamp Prismatic Acrylic Diffuser	1	14	Recessed Flanged Install LED Plug-in Lamp; Bypass and Remove Existing Ballast. Light Emitting Diode Lamp, Screw-in, (2) 8W lamp			520	0.06	0.01	31	7	-	Hylite HL-OB-8W-G24-40K	-	-
524	J Block B Side	Upper Storage Room	1	60	1'x1' Square Recessed Flanged Compact Fluorescent, quad, (2) 26W lamp Prismatic Acrylic Diffuser	1	14	Recessed Flanged Install LED Plug-in Lamp; Bypass and Remove Existing Ballast. Light Emitting Diode Lamp, Screw-in, (2) 8W lamp			520	0.06	0.01	31	7	-	Hylite HL-OB-8W-G24-40K	-	-
525	J Block B Side	Upper Storage Room	1	60	1'x1' Square Recessed Flanged Compact Fluorescent, quad, (2) 26W lamp Prismatic Acrylic Diffuser	1	14	Recessed Flanged Install LED Plug-in Lamp; Bypass and Remove Existing Ballast. Light Emitting Diode Lamp, Screw-in, (2) 8W lamp			520	0.06	0.01	31	7	-	Hylite HL-OB-8W-G24-40K	-	-
526	J Block B Side	Upper Group Room	4	65	1'x4' Troffer; Tamper Proof Recessed Flanged Fluorescent, (3) 48", Super T-8 lamp, Instant Start Ballast, NLO (BF: .85-.95) Prismatic Acrylic Diffuser	4	36	Recessed Flanged T8 LED Retrofit Lamp with External Driver LED 4' T8 Lamp (3) 12W Lamps			520	0.26	0.14	135	74	-	GE 34235 LEDT8/LC/G/4/840	GE 21379 LED/DR/D4L/LW	-
527	J Block B Side	Upper Mechanical Room	3	87	2'x4' Troffer Surface Mounted Fluorescent, (4) 48", Super T-8 lamp, Instant Start Ballast, NLO (BF: .85-.95) Prismatic Acrylic Diffuser	3	48	Surface Mounted T8 LED Retrofit Lamp with External Driver LED 4' T8 Lamp (4) 12W Lamps			520	0.26	0.14	135	74	-	GE 34235 LEDT8/LC/G/4/840	GE 21379 LED/DR/D4L/LW	-
528	J Block B Side	Upper Loft Mechanical	2	65	1'x4' Troffer; Tamper Proof Surface Mounted Fluorescent, (3) 48", Super T-8 lamp, Instant Start Ballast, NLO (BF: .85-.95) Prismatic Acrylic Diffuser	2	36	Surface Mounted T8 LED Retrofit Lamp with External Driver LED 4' T8 Lamp (3) 12W Lamps			200	0.13	0.07	26	14	-	GE 34235 LEDT8/LC/G/4/840	GE 21379 LED/DR/D4L/LW	-
529	J Block B Side	Upper Loft Data Room	3	65	1'x4' Troffer; Tamper Proof Surface Mounted Fluorescent, (3) 48", Super T-8 lamp, Instant Start Ballast, NLO (BF: .85-.95) Prismatic Acrylic Diffuser	3	36	Surface Mounted T8 LED Retrofit Lamp with External Driver LED 4' T8 Lamp (3) 12W Lamps			520	0.19	0.11	101	56	-	GE 34235 LEDT8/LC/G/4/840	GE 21379 LED/DR/D4L/LW	-
530	J Block B Side	Upper Loft Mechanical (behind showers)	2	65	1'x4' Troffer; Tamper Proof Surface Mounted Fluorescent, (3) 48", Super T-8 lamp, Instant Start Ballast, NLO (BF: .85-.95) Prismatic Acrylic Diffuser	2	36	Surface Mounted T8 LED Retrofit Lamp with External Driver LED 4' T8 Lamp (3) 12W Lamps			200	0.13	0.07	26	14	-	GE 34235 LEDT8/LC/G/4/840	GE 21379 LED/DR/D4L/LW	-
531	J Block B Side	Outside Mechanical	2	43	4' Corner Mount Wall Vanity; Tamper-Proof Wall Mounted Fluorescent, (2) 48", Super T-8 lamp, Instant Start Ballast, NLO (BF: .85-.95) Prismatic Acrylic Diffuser	2	24	Wall Mounted T8 LED Retrofit Lamp with External Driver LED 4' T8 Lamp (2) 12W Lamps			200	0.09	0.05	17	10	-	GE 34235 LEDT8/LC/G/4/840	GE 21378 LED/DR/D2L/LW	-
532	J Block B Side	Outside Mechanical	2	65	1'x4' Troffer; Tamper Proof Surface Mounted Fluorescent, (3) 48", Super T-8 lamp, Instant Start Ballast, NLO (BF: .85-.95) Prismatic Acrylic Diffuser	2	36	Surface Mounted T8 LED Retrofit Lamp with External Driver LED 4' T8 Lamp (3) 12W Lamps			200	0.13	0.07	26	14	-	GE 34235 LEDT8/LC/G/4/840	GE 21379 LED/DR/D4L/LW	-
533	G Block B Side	G Block Entry Vestibule	1	43	4' Wraparound; Tamper-Proof Surface Mounted Fluorescent, (2) 48", Super T-8 lamp, Instant Start Ballast, NLO (BF: .85-.95) Prismatic Acrylic Diffuser	1	24	Surface Mounted T8 LED Retrofit Lamp with External Driver LED 4' T8 Lamp (2) 12W Lamps			8760	0.04	0.02	379	208	-	GE 34235 LEDT8/LC/G/4/840	GE 21378 LED/DR/D2L/LW	-
534	G Block B Side	B Side Dayroom	12	266	2'x2' Troffer Recessed Metal Halide, (1) 250W lamp Prismatic Acrylic Diffuser	12	49	Recessed Chip On Board (COB) Type Screw-in / Bypass Existing Ballast Light Emitting Diode Lamp, Screw-in, (1) 54W lamp			5824	3.19	0.58	18,607	3,397	-	KEYSTONE KT-LED54HID-EX39-840-D	-	-
535	G Block B Side	B Side Dayroom	3	19	Universal Face Exit Sign; Black Surface Mounted Compact Fluorescent, twin, (2) 7W lamp (No Diffuser)	3	2	Surface Mounted Upgrade EXIT Sign LED Light Fixture. (1) 2W			8760	0.06	0.01	498	52	-	TCP 20716 RD LED PADDLE RETRO HARDWIRE	-	-
536	G Block B Side	B1-B25 Cells	25	65	4' Wraparound; Tamper-Proof Surface Mounted Fluorescent, (3) 48", Super T-8 lamp, Instant Start Ballast, NLO (BF: .85-.95) Prismatic Acrylic Diffuser	25	36	Surface Mounted T8 LED Retrofit Lamp with External Driver LED 4' T8 Lamp (3) 12W Lamps			2912	1.62	0.89	4,731	2,595	-	GE 34235 LEDT8/LC/G/4/840	GE 21379 LED/DR/D4L/LW	-
537	G Block B Side	Custodial Closet	1	43	4' Wraparound; Tamper-Proof Surface Mounted Fluorescent, (2) 48", Super T-8 lamp, Instant Start Ballast, NLO (BF: .85-.95) Prismatic Acrylic Diffuser	1	24	Surface Mounted T8 LED Retrofit Lamp with External Driver LED 4' T8 Lamp (2) 12W Lamps			1560	0.04	0.02	68	37	-	GE 34235 LEDT8/LC/G/4/840	GE 21378 LED/DR/D2L/LW	-
538	G Block B Side	Inmate Restroom / Showers	3	30	2' Wraparound; Tamper-Proof Surface Mounted Fluorescent, (2) 24", T-8 lamp, Instant Start Ballast, NLO (BF: .85-.95) Prismatic Acrylic Diffuser	3	24	Surface Mounted 2' Wraparound; Tamper-Proof LED Light Fixture. (1) 24W			8760	0.09	0.07	783	624	COOPER FAILSAFE FVS8P-2-LD4-2LO-40-UNV-P125-EDC1-WL	-	-	-
539	G Block B Side	Inmate Restroom / Showers	2	43	4' Wraparound; Tamper-Proof Surface Mounted Fluorescent, (2) 48", Super T-8 lamp, Instant Start Ballast, NLO (BF: .85-.95) Prismatic Acrylic Diffuser	2	46	Surface Mounted 4' Wraparound; Tamper-Proof LED Light Fixture. (1) 46W			8760	0.09	0.09	759	798	COOPER FAILSAFE FVS8P-4-LD4-2LO-40-UNV-P125-EDC1-WL	-	-	-
540	G Block B Side	Upper Book Storage	2	43	4' Wraparound; Tamper-Proof Chain Mounted Fluorescent, (2) 48", Super T-8 lamp, Instant Start Ballast, NLO (BF: .85-.95) Prismatic Acrylic Diffuser	2	24	Chain Mounted T8 LED Retrofit Lamp with External Driver LED 4' T8 Lamp (2) 12W Lamps			520	0.09	0.05	45	25	-	GE 34235 LEDT8/LC/G/4/840	GE 21378 LED/DR/D2L/LW	-
541	G Block B Side	Upper Custodial Closet	1	43	4' Wraparound; Tamper-Proof Surface Mounted Fluorescent, (2) 48", Super T-8 lamp, Instant Start Ballast, NLO (BF: .85-.95) Prismatic Acrylic Diffuser	1	24	Surface Mounted T8 LED Retrofit Lamp with External Driver LED 4' T8 Lamp (2) 12W Lamps			1560	0.04	0.02	68	37	-	GE 34235 LEDT8/LC/G/4/840	GE 21378 LED/DR/D2L/LW	-
542	G Block B Side	Upper Inmate Restroom / Showers	3	30	2' Wraparound; Tamper-Proof Surface Mounted Fluorescent, (2) 24", T-8 lamp, Instant Start Ballast, NLO (BF: .85-.95) Prismatic Acrylic Diffuser	3	24	Surface Mounted 2' Wraparound; Tamper-Proof LED Light Fixture. (1) 24W			8760	0.09	0.07	783	624	COOPER FAILSAFE FVS8P-2-LD4-2LO-40-UNV-P125-EDC1-WL	-	-	-
543	G Block B Side	Upper Inmate Restroom / Showers	2	43	4' Wraparound; Tamper-Proof Surface Mounted Fluorescent, (2) 48", Super T-8 lamp, Instant Start Ballast, NLO (BF: .85-.95) Prismatic Acrylic Diffuser	2	46	Surface Mounted 4' Wraparound; Tamper-Proof LED Light Fixture. (1) 46W			8760	0.09	0.09	759	798	COOPER FAILSAFE FVS8P-4-LD4-2LO-40-UNV-P125-EDC1-WL	-	-	-
544	G Block B Side	Psychology Office	1	87	4' Wraparound; Tamper-Proof Surface Mounted Fluorescent, (4) 48", Super T-8 lamp, Instant Start Ballast, NLO (BF: .85-.95) Prismatic Acrylic Diffuser	1	48	Surface Mounted T8 LED Retrofit Lamp with External Driver LED 4' T8 Lamp (4) 12W Lamps			1560	0.09	0.05	135	74	-	GE 34235 LEDT8/LC/G/4/840	GE 21379 LED/DR/D4L/LW	-
545	G Block B Side	B Side Back Stairwell	6	43	4' Wraparound; Tamper-Proof Wall Mounted Fluorescent, (2) 48", Super T-8 lamp, Instant Start Ballast, NLO (BF: .85-.95) Prismatic Acrylic Diffuser	6	24	Wall Mounted T8 LED Retrofit Lamp with External Driver LED 4' T8 Lamp (2) 12W Lamps			8760	0.26	0.14	2,277	1,249	-	GE 34235 LEDT8/LC/G/4/840	GE 21378 LED/DR/D2L/LW	-

Line #	Facility Area	Space	Pre Fixture Qty	Pre Watts/ Fixt	Pre Description	Post Fixture Qty	Post Watt/ Fixt	Post Description	Wallswitch Sensor	Ceiling Sensor	Hours of Operation	Base kW	Proposed kW	Base kWh	Proposed kWh	Luminaire Part #	Lamp Part #	Driver Part#	Misc. Parts
546	G Block B Side	B Side Back Stairwell	2	43	4' Wraparound; Tamper-Proof Wall Mounted Fluorescent, (2) 48", Super T-8 lamp, Instant Start Ballast, NLO (BF: .85-.95) Prismatic Acrylic Diffuser	2	24	Wall Mounted T8 LED Retrofit Lamp with External Driver LED 4' T8 Lamp (2) 12W Lamps			8760	0.09	0.05	759	416	-	GE 34235 LEDT8/LC/G/4/840	GE 21378 LED/DR/D2L/LW	-
547	G Block B Side	G.001 Mechanical Room	8	43	4' Industrial Chain Mounted Fluorescent, (2) 48", Super T-8 lamp, Instant Start Ballast, NLO (BF: .85-.95) (No Diffuser)	8	24	Chain Mounted T8 LED Retrofit Lamp with External Driver LED 4' T8 Lamp (2) 12W Lamps			520	0.35	0.19	180	99	-	GE 34235 LEDT8/LC/G/4/840	GE 21378 LED/DR/D2L/LW	-
548	G Block B Side	G.001 Mechanical Room	2	19	Universal Face Exit Sign; White Surface Mounted Compact Fluorescent, twin, (2) 7W lamp (No Diffuser)	2	3	Surface Mounted Universal Face Exit Sign; White LED Light Fixture. (1) 3W			8760	0.04	0.01	332	52	TCP 22743 RD LED EXIT BBU WH HOUSING	-	-	-
549	G Block B Side	G.002 Electrical Room	2	43	4' Industrial Chain Mounted Fluorescent, (2) 48", Super T-8 lamp, Instant Start Ballast, NLO (BF: .85-.95) (No Diffuser)	2	24	Chain Mounted T8 LED Retrofit Lamp with External Driver LED 4' T8 Lamp (2) 12W Lamps			520	0.09	0.05	45	25	-	GE 34235 LEDT8/LC/G/4/840	GE 21378 LED/DR/D2L/LW	-
550	G Block B Side	G.003 Security Panel Room	1	43	4' Industrial Chain Mounted Fluorescent, (2) 48", Super T-8 lamp, Instant Start Ballast, NLO (BF: .85-.95) (No Diffuser)	1	24	Chain Mounted T8 LED Retrofit Lamp with External Driver LED 4' T8 Lamp (2) 12W Lamps			520	0.04	0.02	23	12	-	GE 34235 LEDT8/LC/G/4/840	GE 21378 LED/DR/D2L/LW	-
551	G Block A Side	A Side Dayroom	12	266	2'x2' Troffer Recessed Metal Halide, (1) 250W lamp Prismatic Acrylic Diffuser	12	49	Recessed Chip On Board (COB) Type Screw-in / Bypass Existing Ballast Light Emitting Diode Lamp, Screw-in, (1) 54W lamp			5824	3.19	0.58	18,607	3,397	-	KEYSTONE KT-LED54HID-EX39-840-D	-	-
552	G Block A Side	A Side Dayroom	3	19	Universal Face Exit Sign; Black Surface Mounted Compact Fluorescent, twin, (2) 7W lamp (No Diffuser)	3	2	Surface Mounted Upgrade EXIT Sign LED Light Fixture. (1) 2W			8760	0.06	0.01	498	52	-	TCP 20716 RD LED PADDLE RETRO HARDWIRE	-	-
553	G Block A Side	B1-B25 Cells	25	65	4' Wraparound; Tamper-Proof Surface Mounted Fluorescent, (3) 48", Super T-8 lamp, Instant Start Ballast, NLO (BF: .85-.95) Prismatic Acrylic Diffuser	25	36	Surface Mounted T8 LED Retrofit Lamp with External Driver LED 4' T8 Lamp (3) 12W Lamps			2912	1.62	0.89	4,731	2,595	-	GE 34235 LEDT8/LC/G/4/840	GE 21379 LED/DR/D4L/LW	-
554	G Block A Side	Custodial Closet	1	43	4' Wraparound; Tamper-Proof Surface Mounted Fluorescent, (2) 48", Super T-8 lamp, Instant Start Ballast, NLO (BF: .85-.95) Prismatic Acrylic Diffuser	1	24	Surface Mounted T8 LED Retrofit Lamp with External Driver LED 4' T8 Lamp (2) 12W Lamps			1560	0.04	0.02	68	37	-	GE 34235 LEDT8/LC/G/4/840	GE 21378 LED/DR/D2L/LW	-
555	G Block A Side	Inmate Restroom / Showers	3	30	2' Wraparound; Tamper-Proof Surface Mounted Fluorescent, (2) 24", T-8 lamp, Instant Start Ballast, NLO (BF: .85-.95) Prismatic Acrylic Diffuser	3	24	Surface Mounted 2' Wraparound; Tamper-Proof LED Light Fixture. (1) 24W			8760	0.09	0.07	783	624	COOPER FAILSAFE FVS8P-2-LD4-2LO-40-UNV-P125-EDC1-WL	-	-	-
556	G Block A Side	Inmate Restroom / Showers	2	43	4' Wraparound; Tamper-Proof Surface Mounted Fluorescent, (2) 48", Super T-8 lamp, Instant Start Ballast, NLO (BF: .85-.95) Prismatic Acrylic Diffuser	2	46	Surface Mounted 4' Wraparound; Tamper-Proof LED Light Fixture. (1) 46W			8760	0.09	0.09	759	798	COOPER FAILSAFE FVS8P-4-LD4-2LO-40-UNV-P125-EDC1-WL	-	-	-
557	G Block A Side	Upper Book Storage	2	43	4' Wraparound; Tamper-Proof Chain Mounted Fluorescent, (2) 48", Super T-8 lamp, Instant Start Ballast, NLO (BF: .85-.95) Prismatic Acrylic Diffuser	2	24	Chain Mounted T8 LED Retrofit Lamp with External Driver LED 4' T8 Lamp (2) 12W Lamps			520	0.09	0.05	45	25	-	GE 34235 LEDT8/LC/G/4/840	GE 21378 LED/DR/D2L/LW	-
558	G Block A Side	Upper Custodial Closet	1	43	4' Wraparound; Tamper-Proof Surface Mounted Fluorescent, (2) 48", Super T-8 lamp, Instant Start Ballast, NLO (BF: .85-.95) Prismatic Acrylic Diffuser	1	24	Surface Mounted T8 LED Retrofit Lamp with External Driver LED 4' T8 Lamp (2) 12W Lamps			1560	0.04	0.02	68	37	-	GE 34235 LEDT8/LC/G/4/840	GE 21378 LED/DR/D2L/LW	-
559	G Block A Side	Upper Inmate Restroom / Showers	3	30	2' Wraparound; Tamper-Proof Surface Mounted Fluorescent, (2) 24", T-8 lamp, Instant Start Ballast, NLO (BF: .85-.95) Prismatic Acrylic Diffuser	3	24	Surface Mounted 2' Wraparound; Tamper-Proof LED Light Fixture. (1) 24W			8760	0.09	0.07	783	624	COOPER FAILSAFE FVS8P-2-LD4-2LO-40-UNV-P125-EDC1-WL	-	-	-
560	G Block A Side	Upper Inmate Restroom / Showers	2	43	4' Wraparound; Tamper-Proof Surface Mounted Fluorescent, (2) 48", Super T-8 lamp, Instant Start Ballast, NLO (BF: .85-.95) Prismatic Acrylic Diffuser	2	46	Surface Mounted 4' Wraparound; Tamper-Proof LED Light Fixture. (1) 46W			8760	0.09	0.09	759	798	COOPER FAILSAFE FVS8P-4-LD4-2LO-40-UNV-P125-EDC1-WL	-	-	-
561	G Block A Side	Psychology Office	1	87	4' Wraparound; Tamper-Proof Surface Mounted Fluorescent, (4) 48", Super T-8 lamp, Instant Start Ballast, NLO (BF: .85-.95) Prismatic Acrylic Diffuser	1	48	Surface Mounted T8 LED Retrofit Lamp with External Driver LED 4' T8 Lamp (4) 12W Lamps			1560	0.09	0.05	135	74	-	GE 34235 LEDT8/LC/G/4/840	GE 21379 LED/DR/D4L/LW	-
562	G Block A Side	B Side Back Stairwell	6	43	4' Wraparound; Tamper-Proof Wall Mounted Fluorescent, (2) 48", Super T-8 lamp, Instant Start Ballast, NLO (BF: .85-.95) Prismatic Acrylic Diffuser	6	24	Wall Mounted T8 LED Retrofit Lamp with External Driver LED 4' T8 Lamp (2) 12W Lamps			8760	0.26	0.14	2,277	1,249	-	GE 34235 LEDT8/LC/G/4/840	GE 21378 LED/DR/D2L/LW	-
563	G Block A Side	B Side Back Stairwell	2	43	4' Wraparound; Tamper-Proof Wall Mounted Fluorescent, (2) 48", Super T-8 lamp, Instant Start Ballast, NLO (BF: .85-.95) Prismatic Acrylic Diffuser	2	24	Wall Mounted T8 LED Retrofit Lamp with External Driver LED 4' T8 Lamp (2) 12W Lamps			8760	0.09	0.05	759	416	-	GE 34235 LEDT8/LC/G/4/840	GE 21378 LED/DR/D2L/LW	-
564	G Block A Side	G.004 Mechanical Room	10	43	4' Industrial Chain Mounted Fluorescent, (2) 48", Super T-8 lamp, Instant Start Ballast, NLO (BF: .85-.95) (No Diffuser)	10	24	Chain Mounted T8 LED Retrofit Lamp with External Driver LED 4' T8 Lamp (2) 12W Lamps			520	0.43	0.24	225	124	-	GE 34235 LEDT8/LC/G/4/840	GE 21378 LED/DR/D2L/LW	-
565	G Block A Side	G.004 Mechanical Room	2	19	Universal Face Exit Sign; White Surface Mounted Compact Fluorescent, twin, (2) 7W lamp (No Diffuser)	2	3	Surface Mounted Universal Face Exit Sign; White LED Light Fixture. (1) 3W			8760	0.04	0.01	332	52	TCP 22743 RD LED EXIT BBU WH HOUSING	-	-	-
566	G Block C Side	C Side Dayroom	11	266	2'x2' Troffer Recessed Metal Halide, (1) 250W lamp Prismatic Acrylic Diffuser	11	49	Recessed Chip On Board (COB) Type Screw-in / Bypass Existing Ballast Light Emitting Diode Lamp, Screw-in, (1) 54W lamp			5824	2.93	0.53	17,056	3,114	-	KEYSTONE KT-LED54HID-EX39-840-D	-	-
567	G Block C Side	C Side Dayroom	3	87	4' Wraparound; Tamper-Proof Surface Mounted Fluorescent, (4) 48", Super T-8 lamp, Instant Start Ballast, NLO (BF: .85-.95) Prismatic Acrylic Diffuser	3	48	Surface Mounted T8 LED Retrofit Lamp with External Driver LED 4' T8 Lamp (4) 12W Lamps			5824	0.26	0.14	1,514	830	-	GE 34235 LEDT8/LC/G/4/840	GE 21379 LED/DR/D4L/LW	-
568	G Block C Side	C Side Dayroom	1	43	4' Wraparound; Tamper-Proof Surface Mounted Fluorescent, (2) 48", Super T-8 lamp, Instant Start Ballast, NLO (BF: .85-.95) Prismatic Acrylic Diffuser	1	24	Surface Mounted T8 LED Retrofit Lamp with External Driver LED 4' T8 Lamp (2) 12W Lamps			5824	0.04	0.02	252	138	-	GE 34235 LEDT8/LC/G/4/840	GE 21378 LED/DR/D2L/LW	-
569	G Block C Side	C Side Dayroom	1	87	4' Wraparound; Tamper-Proof Surface Mounted Fluorescent, (4) 48", Super T-8 lamp, Instant Start Ballast, NLO (BF: .85-.95) Prismatic Acrylic Diffuser	1	48	Surface Mounted T8 LED Retrofit Lamp with External Driver LED 4' T8 Lamp (4) 12W Lamps			5824	0.09	0.05	505	277	-	GE 34235 LEDT8/LC/G/4/840	GE 21379 LED/DR/D4L/LW	-
570	G Block C Side	C Side Dayroom	3	43	4' Corner Mount Wall Vanity; Tamper-Proof Wall Mounted Fluorescent, (2) 48", Super T-8 lamp, Instant Start Ballast, NLO (BF: .85-.95) Prismatic Acrylic Diffuser	3	24	Wall Mounted T8 LED Retrofit Lamp with External Driver LED 4' T8 Lamp (2) 12W Lamps			5824	0.13	0.07	757	415	-	GE 34235 LEDT8/LC/G/4/840	GE 21378 LED/DR/D2L/LW	-
571	G Block C Side	Dog Wash Room	2	87	4' Wraparound; Tamper-Proof Surface Mounted Fluorescent, (4) 48", Super T-8 lamp, Instant Start Ballast, NLO (BF: .85-.95) Prismatic Acrylic Diffuser	2	48	Surface Mounted T8 LED Retrofit Lamp with External Driver LED 4' T8 Lamp (4) 12W Lamps			1560	0.17	0.10	270	148	-	GE 34235 LEDT8/LC/G/4/840	GE 21379 LED/DR/D4L/LW	-
572	G Block C Side	Office	3	43	4' Wraparound; Tamper-Proof Surface Mounted Fluorescent, (2) 48", Super T-8 lamp, Instant Start Ballast, NLO (BF: .85-.95) Prismatic Acrylic Diffuser	3	24	Surface Mounted T8 LED Retrofit Lamp with External Driver LED 4' T8 Lamp (2) 12W Lamps			3640	0.13	0.07	473	259	-	GE 34235 LEDT8/LC/G/4/840	GE 21378 LED/DR/D2L/LW	-
573	G Block C Side	Office	1	232	8' Vapor Proof Surface Mounted Fluorescent, (2) 96", STD HO lamp Prismatic Acrylic Diffuser	1	64	Surface Mounted 8' Vapor Proof LED Light Fixture. (1) 65W			3640	0.23	0.06	844	234	FEM L96 9000LM LPPFL MD MVOLT GZ10 40K 80CRI TRS MEZ105299	-	-	-
574	G Block C Side	Inmate Dorm 1	12	87	4' Wraparound; Tamper-Proof Surface Mounted Fluorescent, (4) 48", Super T-8 lamp, Instant Start Ballast, NLO (BF: .85-.95) Prismatic Acrylic Diffuser	12	48	Surface Mounted T8 LED Retrofit Lamp with External Driver LED 4' T8 Lamp (4) 12W Lamps			2912	1.04	0.57	3,028	1,661	-	GE 34235 LEDT8/LC/G/4/840	GE 21379 LED/DR/D4L/LW	-
575	G Block C Side	Inmate Dorm 1	2	19	Universal Face Exit Sign; Black Surface Mounted Compact Fluorescent, twin, (2) 7W lamp (No Diffuser)	2	2	Surface Mounted Upgrade EXIT Sign LED Light Fixture. (1) 2W			8760	0.04	0.00	332	35	-	TCP 20716 RD LED PADDLE RETRO HARDWIRE	-	-
576	G Block C Side	GC Showers / Restroom	4	43	4' Corner Mount Wall Vanity; Tamper-Proof Wall Mounted Fluorescent, (2) 48", Super T-8 lamp, Instant Start Ballast, NLO (BF: .85-.95) Prismatic Acrylic Diffuser	4	24	Wall Mounted T8 LED Retrofit Lamp with External Driver LED 4' T8 Lamp (2) 12W Lamps			8760	0.17	0.10	1,518	833	-	GE 34235 LEDT8/LC/G/4/840	GE 21378 LED/DR/D2L/LW	-
577	G Block C Side	Inmate Dorm 2	12	87	4' Wraparound; Tamper-Proof Surface Mounted Fluorescent, (4) 48", Super T-8 lamp, Instant Start Ballast, NLO (BF: .85-.95) Prismatic Acrylic Diffuser	12	48	Surface Mounted T8 LED Retrofit Lamp with External Driver LED 4' T8 Lamp (4) 12W Lamps			2912	1.04	0.57	3,028	1,661	-	GE 34235 LEDT8/LC/G/4/840	GE 21379 LED/DR/D4L/LW	-
578	G Block C Side	Inmate Dorm 2	2	19	Universal Face Exit Sign; Black Surface Mounted Compact Fluorescent, twin, (2) 7W lamp (No Diffuser)	2	2	Surface Mounted Upgrade EXIT Sign LED Light Fixture. (1) 2W			8760	0.04	0.00	332	35	-	TCP 20716 RD LED PADDLE RETRO HARDWIRE	-	-
579	G Block C Side	Group Instruction Room	3	43	4' Wraparound; Tamper-Proof Surface Mounted Fluorescent, (2) 48", Super T-8 lamp, Instant Start Ballast, NLO (BF: .85-.95) Prismatic Acrylic Diffuser	3	24	Surface Mounted T8 LED Retrofit Lamp with External Driver LED 4' T8 Lamp (2) 12W Lamps			2600	0.13	0.07	338	185	-	GE 34235 LEDT8/LC/G/4/840	GE 21378 LED/DR/D2L/LW	-
580	G Block C Side	Group Instruction Room	1	87	4' Wraparound; Tamper-Proof Surface Mounted Fluorescent, (4) 48", Super T-8 lamp, Instant Start Ballast, NLO (BF: .85-.95) Prismatic Acrylic Diffuser	1	48	Surface Mounted T8 LED Retrofit Lamp with External Driver LED 4' T8 Lamp (4) 12W Lamps			2600	0.09	0.05	225	124	-	GE 34235 LEDT8/LC/G/4/840	GE 21379 LED/DR/D4L/LW	-
581	G Block C Side	Inmate Dorm 4	12	87	4' Wraparound; Tamper-Proof Surface Mounted Fluorescent, (4) 48", Super T-8 lamp, Instant Start Ballast, NLO (BF: .85-.95) Prismatic Acrylic Diffuser	12	48	Surface Mounted T8 LED Retrofit Lamp with External Driver LED 4' T8 Lamp (4) 12W Lamps			2912	1.04	0.57	3,028	1,661	-	GE 34235 LEDT8/LC/G/4/840	GE 21379 LED/DR/D4L/LW	-
582	G Block C Side	Inmate Dorm 4	2	19	Universal Face Exit Sign; Black Surface Mounted Compact Fluorescent, twin, (2) 7W lamp (No Diffuser)	2	2	Surface Mounted Upgrade EXIT Sign LED Light Fixture. (1) 2W			8760	0.04	0.00	332	35	-	TCP 20716 RD LED PADDLE RETRO HARDWIRE	-	-
583	G Block C Side	GC Showers / Restroom	4	43	4' Corner Mount Wall Vanity; Tamper-Proof Wall Mounted Fluorescent, (2) 48", Super T-8 lamp, Instant Start Ballast, NLO (BF: .85-.95) Prismatic Acrylic Diffuser	4	24	Wall Mounted T8 LED Retrofit Lamp with External Driver LED 4' T8 Lamp (2) 12W Lamps			8760	0.17	0.10	1,518	833	-	GE 34235 LEDT8/LC/G/4/840	GE 21378 LED/DR/D2L/LW	-
584	G Block C Side	Inmate Dorm 3	12	87	4' Wraparound; Tamper-Proof Surface Mounted Fluorescent, (4) 48", Super T-8 lamp, Instant Start Ballast, NLO (BF: .85-.95) Prismatic Acrylic Diffuser	12	48	Surface Mounted T8 LED Retrofit Lamp with External Driver LED 4' T8 Lamp (4) 12W Lamps			2912	1.04	0.57	3,028	1,661	-	GE 34235 LEDT8/LC/G/4/840	GE 21379 LED/DR/D4L/LW	-

Line #	Facility Area	Space	Pre Fixture Qty	Pre Watts/ Fixt	Pre Description	Post Fixture Qty	Post Watt/ Fixt	Post Description	Wallswitch Sensor	Ceiling Sensor	Hours of Operation	Base kW	Proposed kW	Base kWh	Proposed kWh	Luminaire Part #	Lamp Part #	Driver Part#	Misc. Parts
585	G Block C Side	Inmate Dorm 3	2	19	Universal Face Exit Sign; Black Surface Mounted Compact Fluorescent, twin, (2) 7W lamp (No Diffuser)	2	2	Surface Mounted Upgrade EXIT Sign LED Light Fixture. (1) 2W			8760	0.04	0.00	332	35	-	TCP 20716 RD LED PADDLE RETRO HARDWIRE	-	-
586	G Block C Side	Chemical Storage / JC Equipment Room	2	43	4' Wraparound; Tamper-Proof Pendant Mounted Fluorescent, (2) 48", Super T-8 lamp, Instant Start Ballast, NLO (BF: .85-.95) Prismatic Acrylic Diffuser	2	24	Pendant Mounted T8 LED Retrofit Lamp with External Driver LED 4' T8 Lamp (2) 12W Lamps			3640	0.09	0.05	315	173	-	GE 34235 LEDT8/LC/G/4/840	GE 21378 LED/DR/D2L/LW	-
587	G Block C Side	Activities Closet	1	87	4' Wraparound; Tamper-Proof Surface Mounted Fluorescent, (4) 48", Super T-8 lamp, Instant Start Ballast, NLO (BF: .85-.95) Prismatic Acrylic Diffuser	1	48	Surface Mounted T8 LED Retrofit Lamp with External Driver LED 4' T8 Lamp (4) 12W Lamps			1560	0.09	0.05	135	74	-	GE 34235 LEDT8/LC/G/4/840	GE 21379 LED/DR/D4L/LW	-
588	G Block C Side	Office Suite	6	65	2'x4' Troffer Recessed Flanged Fluorescent, (3) 48", Super T-8 lamp, Instant Start Ballast, NLO (BF: .85-.95) Prismatic Acrylic Diffuser	6	36	Recessed Flanged T8 LED Retrofit Lamp with External Driver LED 4' T8 Lamp (3) 12W Lamps			3640	0.39	0.21	1,419	778	-	GE 34235 LEDT8/LC/G/4/840	GE 21379 LED/DR/D4L/LW	-
589	G Block C Side	Office Suite	1	43	2'x4' Troffer Recessed Flanged Fluorescent, (2) 48", Super T-8 lamp, Instant Start Ballast, NLO (BF: .85-.95) Prismatic Acrylic Diffuser	1	24	Recessed Flanged T8 LED Retrofit Lamp with External Driver LED 4' T8 Lamp (2) 12W Lamps			3640	0.04	0.02	158	86	-	GE 34235 LEDT8/LC/G/4/840	GE 21378 LED/DR/D2L/LW	-
590	G Block C Side	Office Suite	1	43	4' Wraparound; Tamper-Proof Chain Mounted Fluorescent, (2) 48", Super T-8 lamp, Instant Start Ballast, NLO (BF: .85-.95) Prismatic Acrylic Diffuser	1	24	Chain Mounted T8 LED Retrofit Lamp with External Driver LED 4' T8 Lamp (2) 12W Lamps			1560	0.04	0.02	68	37	-	GE 34235 LEDT8/LC/G/4/840	GE 21378 LED/DR/D2L/LW	-
591	G Block C Side	Staff Restroom	1	43	4' Wraparound; Tamper-Proof Surface Mounted Fluorescent, (2) 48", Super T-8 lamp, Instant Start Ballast, NLO (BF: .85-.95) (No Diffuser)	1	24	Surface Mounted T8 LED Retrofit Lamp with External Driver LED 4' T8 Lamp (2) 12W Lamps			1456	0.04	0.02	63	35	-	GE 34235 LEDT8/LC/G/4/840	GE 21378 LED/DR/D2L/LW	-
592	K Guard Shack	K Guard Shack to Outdoor Rec	2	43	4' Vapor Proof; Tamper-Proof Surface Mounted Fluorescent, (2) 48", Super T-8 lamp, Instant Start Ballast, NLO (BF: .85-.95) Prismatic Acrylic Diffuser	2	24	Surface Mounted T8 LED Retrofit Lamp with External Driver LED 4' T8 Lamp (2) 12W Lamps			3640	0.09	0.05	315	173	-	GE 34235 LEDT8/LC/G/4/840	GE 21378 LED/DR/D2L/LW	-
593	K Block Common / A B Dorms	K Block Common Dayroom	26	65	1'x4' Troffer; Tamper Proof Recessed Flanged Fluorescent, (3) 48", Super T-8 lamp, Instant Start Ballast, NLO (BF: .85-.95) Prismatic Acrylic Diffuser	26	36	Recessed Flanged T8 LED Retrofit Lamp with External Driver LED 4' T8 Lamp (3) 12W Lamps			5824	1.69	0.93	9,840	5,397	-	GE 34235 LEDT8/LC/G/4/840	GE 21379 LED/DR/D4L/LW	-
594	K Block Common / A B Dorms	K Block Common Dayroom	2	3	Universal Face Exit Sign; White Surface Mounted EXIT C172Light Emitting Diode, (2) 1.5W lamp, Dual Sided (No Diffuser)	2	3	Existing luminaire to remain as is No Retrofit. To remain as is.			8760	0.01	0.01	49	49	-	-	-	-
595	K Block Common / A B Dorms	Custodial Closet	1	65	1'x4' Troffer; Tamper Proof Recessed Flanged Fluorescent, (3) 48", Super T-8 lamp, Instant Start Ballast, NLO (BF: .85-.95) Prismatic Acrylic Diffuser	1	36	Recessed Flanged T8 LED Retrofit Lamp with External Driver LED 4' T8 Lamp (3) 12W Lamps			1560	0.06	0.04	101	56	-	GE 34235 LEDT8/LC/G/4/840	GE 21379 LED/DR/D4L/LW	-
596	K Block Common / A B Dorms	Custodial Supply / Restroom	1	65	1'x4' Troffer; Tamper Proof Recessed Flanged Fluorescent, (3) 48", Super T-8 lamp, Instant Start Ballast, NLO (BF: .85-.95) Prismatic Acrylic Diffuser	1	36	Recessed Flanged T8 LED Retrofit Lamp with External Driver LED 4' T8 Lamp (3) 12W Lamps			1560	0.06	0.04	101	56	-	GE 34235 LEDT8/LC/G/4/840	GE 21379 LED/DR/D4L/LW	-
597	K Block Common / A B Dorms	Supply Room	2	65	1'x4' Troffer; Tamper Proof Recessed Flanged Fluorescent, (3) 48", Super T-8 lamp, Instant Start Ballast, NLO (BF: .85-.95) Prismatic Acrylic Diffuser	2	36	Recessed Flanged T8 LED Retrofit Lamp with External Driver LED 4' T8 Lamp (3) 12W Lamps			520	0.13	0.07	68	37	-	GE 34235 LEDT8/LC/G/4/840	GE 21379 LED/DR/D4L/LW	-
598	K Block Common / A B Dorms	K Block Control Room	2	65	1'x4' Troffer; Tamper Proof Recessed Flanged Fluorescent, (3) 48", Super T-8 lamp, Instant Start Ballast, NLO (BF: .85-.95) Prismatic Acrylic Diffuser	2	36	Recessed Flanged T8 LED Retrofit Lamp with External Driver LED 4' T8 Lamp (3) 12W Lamps			3640	0.13	0.07	473	259	-	GE 34235 LEDT8/LC/G/4/840	GE 21379 LED/DR/D4L/LW	-
599	K Block Common / A B Dorms	Office	2	65	1'x4' Troffer; Tamper Proof Recessed Flanged Fluorescent, (3) 48", Super T-8 lamp, Instant Start Ballast, NLO (BF: .85-.95) Prismatic Acrylic Diffuser	2	36	Recessed Flanged T8 LED Retrofit Lamp with External Driver LED 4' T8 Lamp (3) 12W Lamps			3640	0.13	0.07	473	259	-	GE 34235 LEDT8/LC/G/4/840	GE 21379 LED/DR/D4L/LW	-
600	K Block Common / A B Dorms	Office	2	65	1'x4' Troffer; Tamper Proof Recessed Flanged Fluorescent, (3) 48", Super T-8 lamp, Instant Start Ballast, NLO (BF: .85-.95) Prismatic Acrylic Diffuser	2	36	Recessed Flanged T8 LED Retrofit Lamp with External Driver LED 4' T8 Lamp (3) 12W Lamps			3640	0.13	0.07	473	259	-	GE 34235 LEDT8/LC/G/4/840	GE 21379 LED/DR/D4L/LW	-
601	K Block Common / A B Dorms	Electrical / Data Room	1	65	1'x4' Troffer; Tamper Proof Recessed Flanged Fluorescent, (3) 48", Super T-8 lamp, Instant Start Ballast, NLO (BF: .85-.95) Prismatic Acrylic Diffuser	1	36	Recessed Flanged T8 LED Retrofit Lamp with External Driver LED 4' T8 Lamp (3) 12W Lamps			520	0.06	0.04	34	19	-	GE 34235 LEDT8/LC/G/4/840	GE 21379 LED/DR/D4L/LW	-
602	K Block Common / A B Dorms	K Block A Side Dorm	42	65	1'x4' Troffer; Tamper Proof Recessed Flanged Fluorescent, (3) 48", Super T-8 lamp, Instant Start Ballast, NLO (BF: .85-.95) Prismatic Acrylic Diffuser	42	36	Recessed Flanged T8 LED Retrofit Lamp with External Driver LED 4' T8 Lamp (3) 12W Lamps			1560	2.73	1.50	4,257	2,335	-	GE 34235 LEDT8/LC/G/4/840	GE 21379 LED/DR/D4L/LW	-
603	K Block Common / A B Dorms	K Block A Side Dorm	2	3	Universal Face Exit Sign; White Surface Mounted EXIT C172Light Emitting Diode, (2) 1.5W lamp, Dual Sided (No Diffuser)	2	3	Existing luminaire to remain as is No Retrofit. To remain as is.			8760	0.01	0.01	49	49	-	-	-	-
604	K Block Common / A B Dorms	Shower Room	2	65	1'x4' Troffer; Tamper Proof Recessed Flanged Fluorescent, (3) 48", Super T-8 lamp, Instant Start Ballast, NLO (BF: .85-.95) Prismatic Acrylic Diffuser	2	36	Recessed Flanged T8 LED Retrofit Lamp with External Driver LED 4' T8 Lamp (3) 12W Lamps			8760	0.13	0.07	1,138	624	-	GE 34235 LEDT8/LC/G/4/840	GE 21379 LED/DR/D4L/LW	-
605	K Block Common / A B Dorms	Staff Restroom	1	65	1'x4' Troffer; Tamper Proof Recessed Flanged Fluorescent, (3) 48", Super T-8 lamp, Instant Start Ballast, NLO (BF: .85-.95) Prismatic Acrylic Diffuser	1	36	Recessed Flanged T8 LED Retrofit Lamp with External Driver LED 4' T8 Lamp (3) 12W Lamps			1456	0.06	0.04	95	52	-	GE 34235 LEDT8/LC/G/4/840	GE 21379 LED/DR/D4L/LW	-
606	K Block Common / A B Dorms	K Block B Side Dorm	42	65	1'x4' Troffer; Tamper Proof Recessed Flanged Fluorescent, (3) 48", Super T-8 lamp, Instant Start Ballast, NLO (BF: .85-.95) Prismatic Acrylic Diffuser	42	36	Recessed Flanged T8 LED Retrofit Lamp with External Driver LED 4' T8 Lamp (3) 12W Lamps			1560	2.73	1.50	4,257	2,335	-	GE 34235 LEDT8/LC/G/4/840	GE 21379 LED/DR/D4L/LW	-
607	K Block Common / A B Dorms	K Block B Side Dorm	2	3	Universal Face Exit Sign; White Surface Mounted EXIT C172Light Emitting Diode, (2) 1.5W lamp, Dual Sided (No Diffuser)	2	3	Existing luminaire to remain as is No Retrofit. To remain as is.			8760	0.01	0.01	49	49	-	-	-	-
608	K Block Common / A B Dorms	Shower Room	2	65	1'x4' Troffer; Tamper Proof Recessed Flanged Fluorescent, (3) 48", Super T-8 lamp, Instant Start Ballast, NLO (BF: .85-.95) Prismatic Acrylic Diffuser	2	36	Recessed Flanged T8 LED Retrofit Lamp with External Driver LED 4' T8 Lamp (3) 12W Lamps			8760	0.13	0.07	1,138	624	-	GE 34235 LEDT8/LC/G/4/840	GE 21379 LED/DR/D4L/LW	-
609	K Block Common / A B Dorms	Staff Restroom	1	65	1'x4' Troffer; Tamper Proof Recessed Flanged Fluorescent, (3) 48", Super T-8 lamp, Instant Start Ballast, NLO (BF: .85-.95) Prismatic Acrylic Diffuser	1	36	Recessed Flanged T8 LED Retrofit Lamp with External Driver LED 4' T8 Lamp (3) 12W Lamps			1456	0.06	0.04	95	52	-	GE 34235 LEDT8/LC/G/4/840	GE 21379 LED/DR/D4L/LW	-
610	K Block Common / A B Dorms	Outdoor Mechanical	2	65	1'x4' Troffer; Tamper Proof Recessed Flanged Fluorescent, (3) 48", Super T-8 lamp, Instant Start Ballast, NLO (BF: .85-.95) Prismatic Acrylic Diffuser	2	36	Recessed Flanged T8 LED Retrofit Lamp with External Driver LED 4' T8 Lamp (3) 12W Lamps			200	0.13	0.07	26	14	-	GE 34235 LEDT8/LC/G/4/840	GE 21379 LED/DR/D4L/LW	-
611	K Block Common / A B Dorms	Outdoor Mechanical	2	65	1'x4' Troffer; Tamper Proof Recessed Flanged Fluorescent, (3) 48", Super T-8 lamp, Instant Start Ballast, NLO (BF: .85-.95) Prismatic Acrylic Diffuser	2	36	Recessed Flanged T8 LED Retrofit Lamp with External Driver LED 4' T8 Lamp (3) 12W Lamps			200	0.13	0.07	26	14	-	GE 34235 LEDT8/LC/G/4/840	GE 21379 LED/DR/D4L/LW	-
612	H Unit Common	H Block Processing Vestibule	6	87	4' Wraparound; Tamper-Proof Surface Mounted Fluorescent, (4) 48", Super T-8 lamp, Instant Start Ballast, NLO (BF: .85-.95) Prismatic Acrylic Diffuser	6	48	Surface Mounted T8 LED Retrofit Lamp with External Driver LED 4' T8 Lamp (4) 12W Lamps			8760	0.52	0.29	4,554	2,498	-	GE 34235 LEDT8/LC/G/4/840	GE 21379 LED/DR/D4L/LW	-
613	H Unit Common	H Block Processing Vestibule	1	19	Universal Face Exit Sign; Black Surface Mounted Compact Fluorescent, twin, (2) 7W lamp (No Diffuser)	1	2	Surface Mounted Upgrade EXIT Sign LED Light Fixture. (1) 2W			8760	0.02	0.00	166	17	-	TCP 20716 RD LED PADDLE RETRO HARDWIRE	-	-
614	H Unit Common	H Intake Holding	9	87	4' Wraparound; Tamper-Proof Surface Mounted Fluorescent, (4) 48", Super T-8 lamp, Instant Start Ballast, NLO (BF: .85-.95) Prismatic Acrylic Diffuser	9	48	Surface Mounted T8 LED Retrofit Lamp with External Driver LED 4' T8 Lamp (4) 12W Lamps			8760	0.78	0.43	6,831	3,746	-	GE 34235 LEDT8/LC/G/4/840	GE 21379 LED/DR/D4L/LW	-
615	H Unit Common	Custodial Supply H4.404	2	43	4' Wraparound; Tamper-Proof Pendant Mounted Fluorescent, (2) 48", Super T-8 lamp, Instant Start Ballast, NLO (BF: .85-.95) Prismatic Acrylic Diffuser	2	24	Pendant Mounted T8 LED Retrofit Lamp with External Driver LED 4' T8 Lamp (2) 12W Lamps			3640	0.09	0.05	315	173	-	GE 34235 LEDT8/LC/G/4/840	GE 21378 LED/DR/D2L/LW	-
616	H Unit Common	H Unit Main Corridor	17	43	4' Wraparound; Tamper-Proof Surface Mounted Fluorescent, (2) 48", Super T-8 lamp, Instant Start Ballast, NLO (BF: .85-.95) Prismatic Acrylic Diffuser	17	24	Surface Mounted T8 LED Retrofit Lamp with External Driver LED 4' T8 Lamp (2) 12W Lamps			8760	0.74	0.40	6,451	3,538	-	GE 34235 LEDT8/LC/G/4/840	GE 21378 LED/DR/D2L/LW	-
617	H Unit Common	H Unit Main Corridor	2	266	2'x2' Troffer Recessed Metal Halide, (1) 250W lamp Prismatic Acrylic Diffuser	2	49	Recessed Chip On Board (COB) Type Screw-in / Bypass Existing Ballast Light Emitting Diode Lamp, Screw-in, (1) 54W lamp			8760	0.53	0.10	4,664	851	-	KEYSTONE KT-LED54HID-EX39-840-D	-	-
618	H Unit Common	H Unit Main Corridor	2	19	Universal Face Exit Sign; Black Surface Mounted Compact Fluorescent, twin, (2) 7W lamp (No Diffuser)	2	2	Surface Mounted Upgrade EXIT Sign LED Light Fixture. (1) 2W			8760	0.04	0.00	332	35	-	TCP 20716 RD LED PADDLE RETRO HARDWIRE	-	-
619	H Unit Common	Storage Room H.405	2	43	4' Wraparound; Tamper-Proof Surface Mounted Fluorescent, (2) 48", Super T-8 lamp, Instant Start Ballast, NLO (BF: .85-.95) Prismatic Acrylic Diffuser	2	24	Surface Mounted T8 LED Retrofit Lamp with External Driver LED 4' T8 Lamp (2) 12W Lamps			520	0.09	0.05	45	25	-	GE 34235 LEDT8/LC/G/4/840	GE 21378 LED/DR/D2L/LW	-
620	H Unit Common	Interview Room H.407	2	87	4' Wraparound; Tamper-Proof Surface Mounted Fluorescent, (4) 48", Super T-8 lamp, Instant Start Ballast, NLO (BF: .85-.95) Prismatic Acrylic Diffuser	2	48	Surface Mounted T8 LED Retrofit Lamp with External Driver LED 4' T8 Lamp (4) 12W Lamps			3640	0.17	0.10	631	346	-	GE 34235 LEDT8/LC/G/4/840	GE 21379 LED/DR/D4L/LW	-
621	H Unit Common	Multipurpose Room Holding H.406	2	87	4' Wraparound; Tamper-Proof Surface Mounted Fluorescent, (4) 48", Super T-8 lamp, Instant Start Ballast, NLO (BF: .85-.95) Prismatic Acrylic Diffuser	2	48	Surface Mounted T8 LED Retrofit Lamp with External Driver LED 4' T8 Lamp (4) 12W Lamps			3640	0.17	0.10	631	346	-	GE 34235 LEDT8/LC/G/4/840	GE 21379 LED/DR/D4L/LW	-
622	H Unit Common	Multipurpose Room Holding H.406	1	43	4' Corner Mount Wall Vanity; Tamper-Proof Wall Mounted Fluorescent, (2) 48", Super T-8 lamp, Instant Start Ballast, NLO (BF: .85-.95) Prismatic Acrylic Diffuser	1	24	Wall Mounted T8 LED Retrofit Lamp with External Driver LED 4' T8 Lamp (2) 12W Lamps			3640	0.04	0.02	158	86	-	GE 34235 LEDT8/LC/G/4/840	GE 21378 LED/DR/D2L/LW	-
623	H Unit Common	Staff Restroom	1	43	4' Wraparound; Tamper-Proof Surface Mounted Fluorescent, (2) 48", Super T-8 lamp, Instant Start Ballast, NLO (BF: .85-.95) Prismatic Acrylic Diffuser	1	24	Surface Mounted T8 LED Retrofit Lamp with External Driver LED 4' T8 Lamp (2) 12W Lamps			1456	0.04	0.02	63	35	-	GE 34235 LEDT8/LC/G/4/840	GE 21378 LED/DR/D2L/LW	-

Line #	Facility Area	Space	Pre Fixture Qty	Pre Watts/ Fixt	Pre Description	Post Fixture Qty	Post Watt/ Fixt	Post Description	Wallswitch Sensor	Ceiling Sensor	Hours of Operation	Base kW	Proposed kW	Base kWh	Proposed kWh	Luminaire Part #	Lamp Part #	Driver Part#	Misc. Parts
624	H Unit Common	Triage Room H.410	1	87	4' Wraparound; Tamper-Proof Surface Mounted Fluorescent, (4) 48", Super T-8 lamp, Instant Start Ballast, NLO (BF: .85-.95) Prismatic Acrylic Diffuser	1	48	Surface Mounted T8 LED Retrofit Lamp with External Driver LED 4' T8 Lamp (4) 12W Lamps			3640	0.09	0.05	315	173	-	GE 34235 LEDT8/LC/G/4/840	GE 21379 LED/DR/D4L/LW	-
625	H Unit Common	Storage Room	1	43	4' Wraparound; Tamper-Proof Surface Mounted Fluorescent, (2) 48", Super T-8 lamp, Instant Start Ballast, NLO (BF: .85-.95) Prismatic Acrylic Diffuser	1	24	Surface Mounted T8 LED Retrofit Lamp with External Driver LED 4' T8 Lamp (2) 12W Lamps			520	0.04	0.02	23	12	-	GE 34235 LEDT8/LC/G/4/840	GE 21378 LED/DR/D2L/LW	-
626	H Unit Common	Sgt. Office / Equipment	6	87	4' Wraparound; Tamper-Proof Surface Mounted Fluorescent, (4) 48", Super T-8 lamp, Instant Start Ballast, NLO (BF: .85-.95) Prismatic Acrylic Diffuser	6	48	Surface Mounted T8 LED Retrofit Lamp with External Driver LED 4' T8 Lamp (4) 12W Lamps			3640	0.52	0.29	1,892	1,038	-	GE 34235 LEDT8/LC/G/4/840	GE 21379 LED/DR/D4L/LW	-
627	H Unit Common	Capt Office H.414	2	87	4' Wraparound; Tamper-Proof Surface Mounted Fluorescent, (4) 48", Super T-8 lamp, Instant Start Ballast, NLO (BF: .85-.95) Prismatic Acrylic Diffuser	2	48	Surface Mounted T8 LED Retrofit Lamp with External Driver LED 4' T8 Lamp (4) 12W Lamps			3640	0.17	0.10	631	346	-	GE 34235 LEDT8/LC/G/4/840	GE 21379 LED/DR/D4L/LW	-
628	H Unit Common	Hearing Office H.415	2	87	4' Wraparound; Tamper-Proof Surface Mounted Fluorescent, (4) 48", Super T-8 lamp, Instant Start Ballast, NLO (BF: .85-.95) Prismatic Acrylic Diffuser	2	48	Surface Mounted T8 LED Retrofit Lamp with External Driver LED 4' T8 Lamp (4) 12W Lamps			3640	0.17	0.10	631	346	-	GE 34235 LEDT8/LC/G/4/840	GE 21379 LED/DR/D4L/LW	-
629	H Unit Common	Mini Law Library H.417	2	87	4' Wraparound; Tamper-Proof Surface Mounted Fluorescent, (4) 48", Super T-8 lamp, Instant Start Ballast, NLO (BF: .85-.95) Prismatic Acrylic Diffuser	2	48	Surface Mounted T8 LED Retrofit Lamp with External Driver LED 4' T8 Lamp (4) 12W Lamps			3640	0.17	0.10	631	346	-	GE 34235 LEDT8/LC/G/4/840	GE 21379 LED/DR/D4L/LW	-
630	H Unit Common	Custodial Closet	1	43	4' Wraparound; Tamper-Proof Surface Mounted Fluorescent, (2) 48", Super T-8 lamp, Instant Start Ballast, NLO (BF: .85-.95) Prismatic Acrylic Diffuser	1	24	Surface Mounted T8 LED Retrofit Lamp with External Driver LED 4' T8 Lamp (2) 12W Lamps			1560	0.04	0.02	68	37	-	GE 34235 LEDT8/LC/G/4/840	GE 21378 LED/DR/D2L/LW	-
631	H Unit Common	Custodial Supply	2	87	4' Wraparound; Tamper-Proof Surface Mounted Fluorescent, (4) 48", Super T-8 lamp, Instant Start Ballast, NLO (BF: .85-.95) Prismatic Acrylic Diffuser	2	48	Surface Mounted T8 LED Retrofit Lamp with External Driver LED 4' T8 Lamp (4) 12W Lamps			3640	0.17	0.10	631	346	-	GE 34235 LEDT8/LC/G/4/840	GE 21379 LED/DR/D4L/LW	-
632	H Unit Common	Stairwell to H Unit Control	4	43	4' Wraparound; Tamper-Proof Wall Mounted Fluorescent, (2) 48", Super T-8 lamp, Instant Start Ballast, NLO (BF: .85-.95) Prismatic Acrylic Diffuser	4	24	Wall Mounted T8 LED Retrofit Lamp with External Driver LED 4' T8 Lamp (2) 12W Lamps			8760	0.17	0.10	1,518	833	-	GE 34235 LEDT8/LC/G/4/840	GE 21378 LED/DR/D2L/LW	-
633	H Unit Common	Upper Control Room	8	65	2'x4' Dimmable Recessed Troffer Recessed Fluorescent, (3) 48", Super T-8 lamp, Instant Start Ballast, NLO (BF: .85-.95) Deep Cell Parabolic Diffuser	8	26	Recessed 2'x4' Troffer LED Light Fixture. (1) 26W			200	0.52	0.21	104	41	GE LPL24B04XMM840VQLTW	-	-	-
634	H Unit Common	Staff Restroom	1	43	4' Wraparound; Tamper-Proof Surface Mounted Fluorescent, (2) 48", Super T-8 lamp, Instant Start Ballast, NLO (BF: .85-.95) Prismatic Acrylic Diffuser	1	24	Surface Mounted T8 LED Retrofit Lamp with External Driver LED 4' T8 Lamp (2) 12W Lamps			1456	0.04	0.02	63	35	-	GE 34235 LEDT8/LC/G/4/840	GE 21378 LED/DR/D2L/LW	-
635	H Unit Common	Roof Access Closet	1	43	4' Wraparound; Tamper-Proof Wall Mounted Fluorescent, (2) 48", Super T-8 lamp, Instant Start Ballast, NLO (BF: .85-.95) Prismatic Acrylic Diffuser	1	24	Wall Mounted T8 LED Retrofit Lamp with External Driver LED 4' T8 Lamp (2) 12W Lamps			200	0.04	0.02	9	5	-	GE 34235 LEDT8/LC/G/4/840	GE 21378 LED/DR/D2L/LW	-
636	H Unit Common	Exterior Electric Room	4	43	4' Industrial Chain Mounted Fluorescent, (2) 48", Super T-8 lamp, Instant Start Ballast, NLO (BF: .85-.95) (No Diffuser)	4	24	Chain Mounted T8 LED Retrofit Lamp with External Driver LED 4' T8 Lamp (2) 12W Lamps			520	0.17	0.10	90	49	-	GE 34235 LEDT8/LC/G/4/840	GE 21378 LED/DR/D2L/LW	-
637	H Unit Common	Easr Penthouse Mechanical Stairwell	3	43	4' Wraparound; Tamper-Proof Wall Mounted Fluorescent, (2) 48", Super T-8 lamp, Instant Start Ballast, NLO (BF: .85-.95) Prismatic Acrylic Diffuser	3	24	Wall Mounted T8 LED Retrofit Lamp with External Driver LED 4' T8 Lamp (2) 12W Lamps			8760	0.13	0.07	1,138	624	-	GE 34235 LEDT8/LC/G/4/840	GE 21378 LED/DR/D2L/LW	-
638	H Unit Common	Easr Penthouse Mechanical Stairwell	1	3	Universal Face Exit Sign; Black Surface Mounted EXIT C172Light Emitting Diode, (2) 1.5W lamp, Dual Sided (No Diffuser)	1	3	Existing luminaire to remain as is No Retrofit. To remain as is.			8760	0.00	0.00	25	25	-	-	-	-
639	H Unit Common	East Penthouse Mechanical	14	43	4' Industrial Chain Mounted Fluorescent, (2) 48", Super T-8 lamp, Instant Start Ballast, NLO (BF: .85-.95) (No Diffuser)	14	24	Chain Mounted T8 LED Retrofit Lamp with External Driver LED 4' T8 Lamp (2) 12W Lamps			520	0.61	0.33	315	173	-	GE 34235 LEDT8/LC/G/4/840	GE 21378 LED/DR/D2L/LW	-
640	H Unit Common	Security Room H.006	2	43	4' Industrial Chain Mounted Fluorescent, (2) 48", Super T-8 lamp, Instant Start Ballast, NLO (BF: .85-.95) (No Diffuser)	2	24	Chain Mounted T8 LED Retrofit Lamp with External Driver LED 4' T8 Lamp (2) 12W Lamps			520	0.09	0.05	45	25	-	GE 34235 LEDT8/LC/G/4/840	GE 21378 LED/DR/D2L/LW	-
641	H Unit Common	West Penthouse Mechanical Stairwell	1	43	4' Wraparound; Tamper-Proof Wall Mounted Fluorescent, (2) 48", Super T-8 lamp, Instant Start Ballast, NLO (BF: .85-.95) Prismatic Acrylic Diffuser	1	24	Wall Mounted T8 LED Retrofit Lamp with External Driver LED 4' T8 Lamp (2) 12W Lamps			8760	0.04	0.02	379	208	-	GE 34235 LEDT8/LC/G/4/840	GE 21378 LED/DR/D2L/LW	-
642	H Unit Common	West Penthouse Mechanical Stairwell	1	43	4' Industrial Chain Mounted Fluorescent, (2) 48", Super T-8 lamp, Instant Start Ballast, NLO (BF: .85-.95) (No Diffuser)	1	24	Chain Mounted T8 LED Retrofit Lamp with External Driver LED 4' T8 Lamp (2) 12W Lamps			8760	0.04	0.02	379	208	-	GE 34235 LEDT8/LC/G/4/840	GE 21378 LED/DR/D2L/LW	-
643	H Unit Common	West Penthouse Mechanical Room	16	43	4' Industrial Chain Mounted Fluorescent, (2) 48", Super T-8 lamp, Instant Start Ballast, NLO (BF: .85-.95) (No Diffuser)	16	24	Chain Mounted T8 LED Retrofit Lamp with External Driver LED 4' T8 Lamp (2) 12W Lamps			520	0.69	0.38	360	198	-	GE 34235 LEDT8/LC/G/4/840	GE 21378 LED/DR/D2L/LW	-
644	H Block A Side	H Block A Side Dayroom	3	266	2'x2' Troffer Recessed Metal Halide, (1) 250W lamp Prismatic Acrylic Diffuser	3	49	Recessed Chip On Board (COB) Type Screw-in / Bypass Existing Ballast Light Emitting Diode Lamp, Screw-in, (1) 54W lamp			5824	0.80	0.15	4,652	849	-	KEYSTONE KT-LED54HID-EX39-840-D	-	-
645	H Block A Side	H Block A Side Dayroom	7	266	2'x2' Troffer Recessed Flanged Metal Halide, (1) 250W lamp Prismatic Acrylic Diffuser	7	49	Recessed Flanged Chip On Board (COB) Type Screw-in / Bypass Existing Ballast Light Emitting Diode Lamp, Screw-in, (1) 54W lamp			5824	1.86	0.34	10,854	1,981	-	KEYSTONE KT-LED54HID-EX39-840-D	-	-
646	H Block A Side	H Block A Side Dayroom	4	19	Universal Face Exit Sign; Black Surface Mounted Compact Fluorescent, twin, (2) 7W lamp (No Diffuser)	4	2	Surface Mounted Upgrade EXIT Sign LED Light Fixture. (1) 2W			8760	0.08	0.01	664	69	-	TCP 20716 RD LED PADDLE RETRO HARDWIRE	-	-
647	H Block A Side	A1-A24 Cells	24	65	4' Wraparound; Tamper-Proof Surface Mounted Fluorescent, (3) 48", Super T-8 lamp, Instant Start Ballast, NLO (BF: .85-.95) Prismatic Acrylic Diffuser	24	36	Surface Mounted T8 LED Retrofit Lamp with External Driver LED 4' T8 Lamp (3) 12W Lamps			2912	1.56	0.86	4,541	2,491	-	GE 34235 LEDT8/LC/G/4/840	GE 21379 LED/DR/D4L/LW	-
648	H Block A Side	Upper / Lower Showers	4	30	2' Wraparound; Tamper-Proof Surface Mounted Fluorescent, (2) 24", T-8 lamp, Instant Start Ballast, NLO (BF: .85-.95) Prismatic Acrylic Diffuser	4	24	Surface Mounted 2' Wraparound; Tamper-Proof LED Light Fixture. (1) 24W			8760	0.12	0.10	1,044	833	COOPER FAILSAFE FVS8P-2-LD4-2LO-40-UNV-P125-EDC1-WL	-	-	-
649	H Block A Side	Upper / Lower Custodial Closets	2	43	4' Wraparound; Tamper-Proof Surface Mounted Fluorescent, (2) 48", Super T-8 lamp, Instant Start Ballast, NLO (BF: .85-.95) Prismatic Acrylic Diffuser	2	24	Surface Mounted T8 LED Retrofit Lamp with External Driver LED 4' T8 Lamp (2) 12W Lamps			1560	0.09	0.05	135	74	-	GE 34235 LEDT8/LC/G/4/840	GE 21378 LED/DR/D2L/LW	-
650	H Block A Side	Coat Room / Pipe Chase	1	43	4' Wraparound; Tamper-Proof Surface Mounted Fluorescent, (2) 48", Super T-8 lamp, Instant Start Ballast, NLO (BF: .85-.95) Prismatic Acrylic Diffuser	1	24	Surface Mounted T8 LED Retrofit Lamp with External Driver LED 4' T8 Lamp (2) 12W Lamps			1560	0.04	0.02	68	37	-	GE 34235 LEDT8/LC/G/4/840	GE 21378 LED/DR/D2L/LW	-
651	H Block A Side	Coat Room / Pipe Chase	1	43	4' Industrial Chain Mounted Fluorescent, (2) 48", Super T-8 lamp, Instant Start Ballast, NLO (BF: .85-.95) (No Diffuser)	1	24	Chain Mounted T8 LED Retrofit Lamp with External Driver LED 4' T8 Lamp (2) 12W Lamps			200	0.04	0.02	9	5	-	GE 34235 LEDT8/LC/G/4/840	GE 21378 LED/DR/D2L/LW	-
652	H Block A Side	Property Room	3	43	4' Wraparound; Tamper-Proof Surface Mounted Fluorescent, (2) 48", Super T-8 lamp, Instant Start Ballast, NLO (BF: .85-.95) Prismatic Acrylic Diffuser	3	24	Surface Mounted T8 LED Retrofit Lamp with External Driver LED 4' T8 Lamp (2) 12W Lamps			520	0.13	0.07	68	37	-	GE 34235 LEDT8/LC/G/4/840	GE 21378 LED/DR/D2L/LW	-
653	H Block A Side	Multipurpose Room	2	87	4' Wraparound; Tamper-Proof Surface Mounted Fluorescent, (4) 48", Super T-8 lamp, Instant Start Ballast, NLO (BF: .85-.95) Prismatic Acrylic Diffuser	2	48	Surface Mounted T8 LED Retrofit Lamp with External Driver LED 4' T8 Lamp (4) 12W Lamps			5824	0.17	0.10	1,009	554	-	GE 34235 LEDT8/LC/G/4/840	GE 21379 LED/DR/D4L/LW	-
654	H Block B Side	H Block B Side Dayroom	3	266	2'x2' Troffer Recessed Metal Halide, (1) 250W lamp Prismatic Acrylic Diffuser	3	49	Recessed Chip On Board (COB) Type Screw-in / Bypass Existing Ballast Light Emitting Diode Lamp, Screw-in, (1) 54W lamp			5824	0.80	0.15	4,652	849	-	KEYSTONE KT-LED54HID-EX39-840-D	-	-
655	H Block B Side	H Block B Side Dayroom	7	266	2'x2' Troffer Recessed Flanged Metal Halide, (1) 250W lamp Prismatic Acrylic Diffuser	7	49	Recessed Flanged Chip On Board (COB) Type Screw-in / Bypass Existing Ballast Light Emitting Diode Lamp, Screw-in, (1) 54W lamp			5824	1.86	0.34	10,854	1,981	-	KEYSTONE KT-LED54HID-EX39-840-D	-	-
656	H Block B Side	H Block B Side Dayroom	4	19	Universal Face Exit Sign; Black Surface Mounted Compact Fluorescent, twin, (2) 7W lamp (No Diffuser)	4	2	Surface Mounted Upgrade EXIT Sign LED Light Fixture. (1) 2W			8760	0.08	0.01	664	69	-	TCP 20716 RD LED PADDLE RETRO HARDWIRE	-	-
657	H Block B Side	B1-B24 Cells	24	65	4' Wraparound; Tamper-Proof Surface Mounted Fluorescent, (3) 48", Super T-8 lamp, Instant Start Ballast, NLO (BF: .85-.95) Prismatic Acrylic Diffuser	24	36	Surface Mounted T8 LED Retrofit Lamp with External Driver LED 4' T8 Lamp (3) 12W Lamps			2912	1.56	0.86	4,541	2,491	-	GE 34235 LEDT8/LC/G/4/840	GE 21379 LED/DR/D4L/LW	-
658	H Block B Side	Upper / Lower Showers	4	30	2' Wraparound; Tamper-Proof Surface Mounted Fluorescent, (2) 24", T-8 lamp, Instant Start Ballast, NLO (BF: .85-.95) Prismatic Acrylic Diffuser	4	24	Surface Mounted 2' Wraparound; Tamper-Proof LED Light Fixture. (1) 24W			8760	0.12	0.10	1,044	833	COOPER FAILSAFE FVS8P-2-LD4-2LO-40-UNV-P125-EDC1-WL	-	-	-
659	H Block B Side	Upper / Lower Custodial Closets	2	43	4' Wraparound; Tamper-Proof Surface Mounted Fluorescent, (2) 48", Super T-8 lamp, Instant Start Ballast, NLO (BF: .85-.95) Prismatic Acrylic Diffuser	2	24	Surface Mounted T8 LED Retrofit Lamp with External Driver LED 4' T8 Lamp (2) 12W Lamps			1560	0.09	0.05	135	74	-	GE 34235 LEDT8/LC/G/4/840	GE 21378 LED/DR/D2L/LW	-
660	H Block B Side	Coat Room / Pipe Chase	1	43	4' Wraparound; Tamper-Proof Surface Mounted Fluorescent, (2) 48", Super T-8 lamp, Instant Start Ballast, NLO (BF: .85-.95) Prismatic Acrylic Diffuser	1	24	Surface Mounted T8 LED Retrofit Lamp with External Driver LED 4' T8 Lamp (2) 12W Lamps			1560	0.04	0.02	68	37	-	GE 34235 LEDT8/LC/G/4/840	GE 21378 LED/DR/D2L/LW	-
661	H Block B Side	Coat Room / Pipe Chase	1	43	4' Industrial Chain Mounted Fluorescent, (2) 48", Super T-8 lamp, Instant Start Ballast, NLO (BF: .85-.95) (No Diffuser)	1	24	Chain Mounted T8 LED Retrofit Lamp with External Driver LED 4' T8 Lamp (2) 12W Lamps			200	0.04	0.02	9	5	-	GE 34235 LEDT8/LC/G/4/840	GE 21378 LED/DR/D2L/LW	-
662	H Block B Side	Property Room	3	43	4' Wraparound; Tamper-Proof Surface Mounted Fluorescent, (2) 48", Super T-8 lamp, Instant Start Ballast, NLO (BF: .85-.95) Prismatic Acrylic Diffuser	3	24	Surface Mounted T8 LED Retrofit Lamp with External Driver LED 4' T8 Lamp (2) 12W Lamps			520	0.13	0.07	68	37	-	GE 34235 LEDT8/LC/G/4/840	GE 21378 LED/DR/D2L/LW	-

Line #	Facility Area	Space	Pre Fixture Qty	Pre Watts/ Fixt	Pre Description	Post Fixture Qty	Post Watt/ Fixt	Post Description	Wallswitch Sensor	Ceiling Sensor	Hours of Operation	Base kW	Proposed kW	Base kWh	Proposed kWh	Luminaire Part #	Lamp Part #	Driver Part#	Misc. Parts
663	H Block B Side	Multipurpose Room	2	87	4' Wraparound; Tamper-Proof Surface Mounted Fluorescent, (4) 48", Super T-8 lamp, Instant Start Ballast, NLO (BF: .85-.95) Prismatic Acrylic Diffuser	2	48	Surface Mounted T8 LED Retrofit Lamp with External Driver LED 4' T8 Lamp (4) 12W Lamps			5824	0.17	0.10	1,009	554	-	GE 34235 LEDT8/LC/G/4/840	GE 21379 LED/DR/D4L/LW	-
664	H Block C Side	H Block C Side Dayroom	3	266	2'x2' Troffer Recessed Metal Halide, (1) 250W lamp Prismatic Acrylic Diffuser	3	49	Recessed Chip On Board (COB) Type Screw-in / Bypass Existing Ballast Light Emitting Diode Lamp, Screw-in, (1) 54W lamp			5824	0.80	0.15	4,652	849	-	KEYSTONE KT-LED54HID-EX39-840-D	-	-
665	H Block C Side	H Block C Side Dayroom	7	266	2'x2' Troffer Recessed Flanged Metal Halide, (1) 250W lamp Prismatic Acrylic Diffuser	7	49	Recessed Flanged Chip On Board (COB) Type Screw-in / Bypass Existing Ballast Light Emitting Diode Lamp, Screw-in, (1) 54W lamp			5824	1.86	0.34	10,854	1,981	-	KEYSTONE KT-LED54HID-EX39-840-D	-	-
666	H Block C Side	H Block C Side Dayroom	4	19	Universal Face Exit Sign; Black Surface Mounted Compact Fluorescent, twin, (2) 7W lamp (No Diffuser)	4	2	Surface Mounted Upgrade EXIT Sign LED Light Fixture. (1) 2W			8760	0.08	0.01	664	69	-	TCP 20716 RD LED PADDLE RETRO HARDWIRE	-	-
667	H Block C Side	C1-C24 Cells	24	65	4' Wraparound; Tamper-Proof Surface Mounted Fluorescent, (3) 48", Super T-8 lamp, Instant Start Ballast, NLO (BF: .85-.95) Prismatic Acrylic Diffuser	24	36	Surface Mounted T8 LED Retrofit Lamp with External Driver LED 4' T8 Lamp (3) 12W Lamps			2912	1.56	0.86	4,541	2,491	-	GE 34235 LEDT8/LC/G/4/840	GE 21379 LED/DR/D4L/LW	-
668	H Block C Side	Upper / Lower Showers	4	30	2' Wraparound; Tamper-Proof Surface Mounted Fluorescent, (2) 24", T-8 lamp, Instant Start Ballast, NLO (BF: .85-.95) Prismatic Acrylic Diffuser	4	24	Surface Mounted 2' Wraparound; Tamper-Proof LED Light Fixture. (1) 24W			8760	0.12	0.10	1,044	833	COOPER FAILSAFE FVS8P-2-LD4-2LO-40-UNV-P125-EDC1-WL	-	-	-
669	H Block C Side	Upper / Lower Custodial Closets	2	43	4' Wraparound; Tamper-Proof Surface Mounted Fluorescent, (2) 48", Super T-8 lamp, Instant Start Ballast, NLO (BF: .85-.95) Prismatic Acrylic Diffuser	2	24	Surface Mounted T8 LED Retrofit Lamp with External Driver LED 4' T8 Lamp (2) 12W Lamps			1560	0.09	0.05	135	74	-	GE 34235 LEDT8/LC/G/4/840	GE 21378 LED/DR/D2L/LW	-
670	H Block C Side	Stairwell / Bridge from B to D	5	43	4' Wraparound; Tamper-Proof Wall Mounted Fluorescent, (2) 48", Super T-8 lamp, Instant Start Ballast, NLO (BF: .85-.95) Prismatic Acrylic Diffuser	5	24	Wall Mounted T8 LED Retrofit Lamp with External Driver LED 4' T8 Lamp (2) 12W Lamps			8760	0.22	0.12	1,897	1,041	-	GE 34235 LEDT8/LC/G/4/840	GE 21378 LED/DR/D2L/LW	-
671	H Block C Side	Property Room	3	43	4' Wraparound; Tamper-Proof Surface Mounted Fluorescent, (2) 48", Super T-8 lamp, Instant Start Ballast, NLO (BF: .85-.95) Prismatic Acrylic Diffuser	3	24	Surface Mounted T8 LED Retrofit Lamp with External Driver LED 4' T8 Lamp (2) 12W Lamps			520	0.13	0.07	68	37	-	GE 34235 LEDT8/LC/G/4/840	GE 21378 LED/DR/D2L/LW	-
672	H Block C Side	Multipurpose Room	2	87	4' Wraparound; Tamper-Proof Surface Mounted Fluorescent, (4) 48", Super T-8 lamp, Instant Start Ballast, NLO (BF: .85-.95) Prismatic Acrylic Diffuser	2	48	Surface Mounted T8 LED Retrofit Lamp with External Driver LED 4' T8 Lamp (4) 12W Lamps			5824	0.17	0.10	1,009	554	-	GE 34235 LEDT8/LC/G/4/840	GE 21379 LED/DR/D4L/LW	-
673	H Block D Side	H Block D Side Dayroom	3	266	2'x2' Troffer Recessed Metal Halide, (1) 250W lamp Prismatic Acrylic Diffuser	3	49	Recessed Chip On Board (COB) Type Screw-in / Bypass Existing Ballast Light Emitting Diode Lamp, Screw-in, (1) 54W lamp			5824	0.80	0.15	4,652	849	-	KEYSTONE KT-LED54HID-EX39-840-D	-	-
674	H Block D Side	H Block B Side Dayroom	7	266	2'x2' Troffer Recessed Flanged Metal Halide, (1) 250W lamp Prismatic Acrylic Diffuser	7	49	Recessed Flanged Chip On Board (COB) Type Screw-in / Bypass Existing Ballast Light Emitting Diode Lamp, Screw-in, (1) 54W lamp			5824	1.86	0.34	10,854	1,981	-	KEYSTONE KT-LED54HID-EX39-840-D	-	-
675	H Block D Side	H Block B Side Dayroom	4	19	Universal Face Exit Sign; Black Surface Mounted Compact Fluorescent, twin, (2) 7W lamp (No Diffuser)	4	2	Surface Mounted Upgrade EXIT Sign LED Light Fixture. (1) 2W			8760	0.08	0.01	664	69	-	TCP 20716 RD LED PADDLE RETRO HARDWIRE	-	-
676	H Block D Side	D1-D24 Cells	24	65	4' Wraparound; Tamper-Proof Surface Mounted Fluorescent, (3) 48", Super T-8 lamp, Instant Start Ballast, NLO (BF: .85-.95) Prismatic Acrylic Diffuser	24	36	Surface Mounted T8 LED Retrofit Lamp with External Driver LED 4' T8 Lamp (3) 12W Lamps			2912	1.56	0.86	4,541	2,491	-	GE 34235 LEDT8/LC/G/4/840	GE 21379 LED/DR/D4L/LW	-
677	H Block D Side	Upper / Lower Showers	4	30	2' Wraparound; Tamper-Proof Surface Mounted Fluorescent, (2) 24", T-8 lamp, Instant Start Ballast, NLO (BF: .85-.95) Prismatic Acrylic Diffuser	4	24	Surface Mounted 2' Wraparound; Tamper-Proof LED Light Fixture. (1) 24W			8760	0.12	0.10	1,044	833	COOPER FAILSAFE FVS8P-2-LD4-2LO-40-UNV-P125-EDC1-WL	-	-	-
678	H Block D Side	Upper / Lower Custodial Closets	2	43	4' Wraparound; Tamper-Proof Surface Mounted Fluorescent, (2) 48", Super T-8 lamp, Instant Start Ballast, NLO (BF: .85-.95) Prismatic Acrylic Diffuser	2	24	Surface Mounted T8 LED Retrofit Lamp with External Driver LED 4' T8 Lamp (2) 12W Lamps			1560	0.09	0.05	135	74	-	GE 34235 LEDT8/LC/G/4/840	GE 21378 LED/DR/D2L/LW	-
679	H Block D Side	Stairwell / Bridge from B to D	5	43	4' Wraparound; Tamper-Proof Wall Mounted Fluorescent, (2) 48", Super T-8 lamp, Instant Start Ballast, NLO (BF: .85-.95) Prismatic Acrylic Diffuser	5	24	Wall Mounted T8 LED Retrofit Lamp with External Driver LED 4' T8 Lamp (2) 12W Lamps			8760	0.22	0.12	1,897	1,041	-	GE 34235 LEDT8/LC/G/4/840	GE 21378 LED/DR/D2L/LW	-
680	H Block D Side	Property Room	3	43	4' Wraparound; Tamper-Proof Surface Mounted Fluorescent, (2) 48", Super T-8 lamp, Instant Start Ballast, NLO (BF: .85-.95) Prismatic Acrylic Diffuser	3	24	Surface Mounted T8 LED Retrofit Lamp with External Driver LED 4' T8 Lamp (2) 12W Lamps			520	0.13	0.07	68	37	-	GE 34235 LEDT8/LC/G/4/840	GE 21378 LED/DR/D2L/LW	-
681	H Block D Side	Multipurpose Room	2	87	4' Wraparound; Tamper-Proof Surface Mounted Fluorescent, (4) 48", Super T-8 lamp, Instant Start Ballast, NLO (BF: .85-.95) Prismatic Acrylic Diffuser	2	48	Surface Mounted T8 LED Retrofit Lamp with External Driver LED 4' T8 Lamp (4) 12W Lamps			5824	0.17	0.10	1,009	554	-	GE 34235 LEDT8/LC/G/4/840	GE 21379 LED/DR/D4L/LW	-
682	Education Building	Chapel	12	61	Cylinder Fixture Pendant Mounted Compact Fluorescent, spiral, (1) 68W lamp Frosted Glass Lens	12	41	Pendant Mounted Chip On Board (COB) Type Screw-in / Bypass Existing Ballast Light Emitting Diode Lamp, Screw-in, (1) 45W lamp - HIGH			3640	0.74	0.49	2,681	1,769	-	KEYSTONE KT-LED45HID-EX39-840-D	-	-
683	Education Building	Chapel	3	19	Universal Face Exit Sign; White Surface Mounted Compact Fluorescent, twin, (2) 7W lamp (No Diffuser)	3	3	Surface Mounted Universal Face Exit Sign; White LED Light Fixture. (1) 3W			8760	0.06	0.01	498	78	TCP 22743 RD LED EXIT BBU WH HOUSING	-	-	-
684	Education Building	Chapel	30	23	Indirect Mount Luminaire Surface Mounted Fluorescent, (1) 48", Super T-8 lamp, Instant Start Ballast, NLO (BF: .85-.95) (No Diffuser)	30	12	Surface Mounted T8 LED Retrofit Lamp with External Driver LED 4' T8 Lamp (1) 12W Lamp			1560	0.70	0.36	1,098	556	-	GE 34235 LEDT8/LC/G/4/840	GE 21378 LED/DR/D2L/LW	-
685	Education Building	Parole Office 7.211	3	65	2'x4' Troffer Recessed Fluorescent, (3) 48", Super T-8 lamp, Instant Start Ballast, NLO (BF: .85-.95) Prismatic Acrylic Diffuser	3	26	Recessed 2'x4' Troffer LED Light Fixture. (1) 26W			3640	0.19	0.08	710	281	GE LPL24B04XMM840VQLTW	-	-	-
686	Education Building	Parole Office 7.211	1	65	2'x4' Troffer Recessed Fluorescent, (3) 48", Super T-8 lamp, Instant Start Ballast, NLO (BF: .85-.95) Deep Cell Parabolic Diffuser	1	26	Recessed 2'x4' Troffer LED Light Fixture. (1) 26W			3640	0.06	0.03	237	94	GE LPL24B04XMM840VQLTW	-	-	-
687	Education Building	Parole Office 7.211	1	23	4' Wraparound Surface Mounted Fluorescent, (1) 48", Super T-8 lamp, Instant Start Ballast, NLO (BF: .85-.95) Frosted Glass Lens	1	12	Surface Mounted T8 LED Retrofit Lamp with External Driver LED 4' T8 Lamp (1) 12W Lamp			3640	0.02	0.01	85	43	-	GE 34235 LEDT8/LC/G/4/840	GE 21378 LED/DR/D2L/LW	-
688	Education Building	Office 7.206	2	65	2'x4' Troffer Recessed Fluorescent, (3) 48", Super T-8 lamp, Instant Start Ballast, NLO (BF: .85-.95) Prismatic Acrylic Diffuser	2	26	Recessed 2'x4' Troffer LED Light Fixture. (1) 26W	1		2730	0.13	0.05	473	187	GE LPL24B04XMM840VQLTW	-	-	-
689	Education Building	Office 7.205	2	53	2'x2' Troffer Recessed Fluorescent, (2) U-Tube, T-8 lamp, Instant Start Ballast Prismatic Acrylic Diffuser	2	20	Recessed 2'x2' Troffer LED Light Fixture. (1) 20W	1		2730	0.11	0.04	388	144	GE LPL22B03XMM840VQLTW	-	-	-
690	Education Building	Staff Restroom 7.208	1	43	4' Wraparound; Tamper-Proof Surface Mounted Fluorescent, (2) 48", Super T-8 lamp, Instant Start Ballast, NLO (BF: .85-.95) Prismatic Acrylic Diffuser	1	24	Surface Mounted T8 LED Retrofit Lamp with External Driver LED 4' T8 Lamp (2) 12W Lamps	1		1092	0.04	0.02	63	35	-	GE 34235 LEDT8/LC/G/4/840	GE 21378 LED/DR/D2L/LW	-
691	Education Building	Storage Closet 7.202	1	23	4' Wraparound Surface Mounted Fluorescent, (1) 48", Super T-8 lamp, Instant Start Ballast, NLO (BF: .85-.95) Frosted Glass Lens	1	12	Surface Mounted T8 LED Retrofit Lamp with External Driver LED 4' T8 Lamp (1) 12W Lamp			200	0.02	0.01	5	2	-	GE 34235 LEDT8/LC/G/4/840	GE 21378 LED/DR/D2L/LW	-
692	Education Building	Office 7.203	2	65	2'x4' Troffer Recessed Fluorescent, (3) 48", Super T-8 lamp, Instant Start Ballast, NLO (BF: .85-.95) Prismatic Acrylic Diffuser	2	26	Recessed 2'x4' Troffer LED Light Fixture. (1) 26W			3640	0.13	0.05	473	187	GE LPL24B04XMM840VQLTW	-	-	-
693	Education Building	Office 7.207	2	65	2'x4' Troffer Recessed Fluorescent, (3) 48", Super T-8 lamp, Instant Start Ballast, NLO (BF: .85-.95) Prismatic Acrylic Diffuser	2	26	Recessed 2'x4' Troffer LED Light Fixture. (1) 26W			3640	0.13	0.05	473	187	GE LPL24B04XMM840VQLTW	-	-	-
694	Education Building	Office 7.209	2	65	2'x4' Troffer Recessed Fluorescent, (3) 48", Super T-8 lamp, Instant Start Ballast, NLO (BF: .85-.95) Prismatic Acrylic Diffuser	2	26	Recessed 2'x4' Troffer LED Light Fixture. (1) 26W			3640	0.13	0.05	473	187	GE LPL24B04XMM840VQLTW	-	-	-
695	Education Building	Office 7.204	2	65	2'x4' Troffer Recessed Fluorescent, (3) 48", Super T-8 lamp, Instant Start Ballast, NLO (BF: .85-.95) Prismatic Acrylic Diffuser	2	26	Recessed 2'x4' Troffer LED Light Fixture. (1) 26W			3640	0.13	0.05	473	187	GE LPL24B04XMM840VQLTW	-	-	-
696	Education Building	Group Room 7.333	4	65	2'x4' Troffer Recessed Fluorescent, (3) 48", Super T-8 lamp, Instant Start Ballast, NLO (BF: .85-.95) Prismatic Acrylic Diffuser	4	26	Recessed 2'x4' Troffer LED Light Fixture. (1) 26W			3640	0.26	0.10	946	375	GE LPL24B04XMM840VQLTW	-	-	-
697	Education Building	Group Room	4	65	2'x4' Troffer Recessed Fluorescent, (3) 48", Super T-8 lamp, Instant Start Ballast, NLO (BF: .85-.95) Prismatic Acrylic Diffuser	4	26	Recessed 2'x4' Troffer LED Light Fixture. (1) 26W		1	2730	0.26	0.10	946	375	GE LPL24B04XMM840VQLTW	-	-	-
698	Education Building	Legal Mail Room	2	65	2'x4' Troffer Recessed Fluorescent, (3) 48", Super T-8 lamp, Instant Start Ballast, NLO (BF: .85-.95) Prismatic Acrylic Diffuser	2	26	Recessed 2'x4' Troffer LED Light Fixture. (1) 26W	1		2730	0.13	0.05	473	187	GE LPL24B04XMM840VQLTW	-	-	-
699	Education Building	Custodial Closet 7.331	1	43	4' Wraparound; Tamper-Proof Surface Mounted Fluorescent, (2) 48", Super T-8 lamp, Instant Start Ballast, NLO (BF: .85-.95) Prismatic Acrylic Diffuser	1	24	Surface Mounted T8 LED Retrofit Lamp with External Driver LED 4' T8 Lamp (2) 12W Lamps	1		1170	0.04	0.02	68	37	-	GE 34235 LEDT8/LC/G/4/840	GE 21378 LED/DR/D2L/LW	-
700	Education Building	Inmate Restroom 7.330	1	43	4' Wraparound; Tamper-Proof Surface Mounted Fluorescent, (2) 48", Super T-8 lamp, Instant Start Ballast, NLO (BF: .85-.95) Prismatic Acrylic Diffuser	1	24	Surface Mounted T8 LED Retrofit Lamp with External Driver LED 4' T8 Lamp (2) 12W Lamps	1		1092	0.04	0.02	63	35	-	GE 34235 LEDT8/LC/G/4/840	GE 21378 LED/DR/D2L/LW	-
701	Education Building	Inmate Restroom 7.329	1	43	4' Wraparound; Tamper-Proof Surface Mounted Fluorescent, (2) 48", Super T-8 lamp, Instant Start Ballast, NLO (BF: .85-.95) Prismatic Acrylic Diffuser	1	24	Surface Mounted T8 LED Retrofit Lamp with External Driver LED 4' T8 Lamp (2) 12W Lamps	1		1092	0.04	0.02	63	35	-	GE 34235 LEDT8/LC/G/4/840	GE 21378 LED/DR/D2L/LW	-

Line #	Facility Area	Space	Pre Fixture Qty	Pre Watts/ Fixt	Pre Description	Post Fixture Qty	Post Watt/ Fixt	Post Description	Wallswitch Sensor	Ceiling Sensor	Hours of Operation	Base kW	Proposed kW	Base kWh	Proposed kWh	Luminaire Part #	Lamp Part #	Driver Part#	Misc. Parts
702	Education Building	Corridor 7.309	6	43	2'x4' Troffer Recessed Fluorescent, (2) 48", Super T-8 lamp, Instant Start Ballast, NLO (BF: .85-.95) Prismatic Acrylic Diffuser	6	26	Recessed 2'x4' Troffer LED Light Fixture. (1) 26W			6570	0.26	0.15	1,708	1,015	GE LPL24B04XMM840VQLTW	-	-	-
703	Education Building	Corridor 7.309	1	65	2'x4' Troffer Recessed Fluorescent, (3) 48", Super T-8 lamp, Instant Start Ballast, NLO (BF: .85-.95) Prismatic Acrylic Diffuser	1	26	Recessed 2'x4' Troffer LED Light Fixture. (1) 26W			6570	0.06	0.03	427	169	GE LPL24B04XMM840VQLTW	-	-	-
704	Education Building	Corridor 7.309	3	19	Universal Face Exit Sign; White Surface Mounted Compact Fluorescent, twin, (2) 7W lamp (No Diffuser)	3	3	Surface Mounted Universal Face Exit Sign; White LED Light Fixture. (1) 3W			8760	0.06	0.01	498	78	TCP 22743 RD LED EXIT BBU WH HOUSING	-	-	-
705	Education Building	Office 7.310	2	43	2'x4' Troffer Recessed Fluorescent, (2) 48", Super T-8 lamp, Instant Start Ballast, NLO (BF: .85-.95) Prismatic Acrylic Diffuser	2	26	Recessed 2'x4' Troffer LED Light Fixture. (1) 26W	1		2730	0.09	0.05	315	187	GE LPL24B04XMM840VQLTW	-	-	-
706	Education Building	Office 7.311	2	43	2'x4' Troffer Recessed Fluorescent, (2) 48", Super T-8 lamp, Instant Start Ballast, NLO (BF: .85-.95) Prismatic Acrylic Diffuser	2	26	Recessed 2'x4' Troffer LED Light Fixture. (1) 26W	1		2730	0.09	0.05	315	187	GE LPL24B04XMM840VQLTW	-	-	-
707	Education Building	Office 7.308	2	65	2'x4' Troffer Recessed Fluorescent, (3) 48", Super T-8 lamp, Instant Start Ballast, NLO (BF: .85-.95) Prismatic Acrylic Diffuser	2	26	Recessed 2'x4' Troffer LED Light Fixture. (1) 26W			3640	0.13	0.05	473	187	GE LPL24B04XMM840VQLTW	-	-	-
708	Education Building	Office 7.312	2	43	2'x4' Troffer Recessed Fluorescent, (2) 48", Super T-8 lamp, Instant Start Ballast, NLO (BF: .85-.95) Prismatic Acrylic Diffuser	2	26	Recessed 2'x4' Troffer LED Light Fixture. (1) 26W	1		2730	0.09	0.05	315	187	GE LPL24B04XMM840VQLTW	-	-	-
709	Education Building	Office 7.307	2	65	2'x4' Troffer Recessed Fluorescent, (3) 48", Super T-8 lamp, Instant Start Ballast, NLO (BF: .85-.95) Prismatic Acrylic Diffuser	2	26	Recessed 2'x4' Troffer LED Light Fixture. (1) 26W			3640	0.13	0.05	473	187	GE LPL24B04XMM840VQLTW	-	-	-
710	Education Building	Office 7.313	2	43	2'x4' Troffer Recessed Fluorescent, (2) 48", Super T-8 lamp, Instant Start Ballast, NLO (BF: .85-.95) Prismatic Acrylic Diffuser	2	26	Recessed 2'x4' Troffer LED Light Fixture. (1) 26W	1		2730	0.09	0.05	315	187	GE LPL24B04XMM840VQLTW	-	-	-
711	Education Building	Office 7.314	2	65	2'x4' Troffer Recessed Fluorescent, (3) 48", Super T-8 lamp, Instant Start Ballast, NLO (BF: .85-.95) Prismatic Acrylic Diffuser	2	26	Recessed 2'x4' Troffer LED Light Fixture. (1) 26W			3640	0.13	0.05	473	187	GE LPL24B04XMM840VQLTW	-	-	-
712	Education Building	Office 7.306	2	65	2'x4' Troffer Recessed Fluorescent, (3) 48", Super T-8 lamp, Instant Start Ballast, NLO (BF: .85-.95) Prismatic Acrylic Diffuser	2	26	Recessed 2'x4' Troffer LED Light Fixture. (1) 26W			3640	0.13	0.05	473	187	GE LPL24B04XMM840VQLTW	-	-	-
713	Education Building	Office 7.305	2	43	2'x4' Troffer Recessed Fluorescent, (2) 48", Super T-8 lamp, Instant Start Ballast, NLO (BF: .85-.95) Prismatic Acrylic Diffuser	2	26	Recessed 2'x4' Troffer LED Light Fixture. (1) 26W			3640	0.09	0.05	315	187	GE LPL24B04XMM840VQLTW	-	-	-
714	Education Building	Office 7.315	2	65	2'x4' Troffer Recessed Fluorescent, (3) 48", Super T-8 lamp, Instant Start Ballast, NLO (BF: .85-.95) Prismatic Acrylic Diffuser	2	26	Recessed 2'x4' Troffer LED Light Fixture. (1) 26W	1		2730	0.13	0.05	473	187	GE LPL24B04XMM840VQLTW	-	-	-
715	Education Building	Office 7.304	2	65	2'x4' Troffer Recessed Fluorescent, (3) 48", Super T-8 lamp, Instant Start Ballast, NLO (BF: .85-.95) Prismatic Acrylic Diffuser	2	26	Recessed 2'x4' Troffer LED Light Fixture. (1) 26W			3640	0.13	0.05	473	187	GE LPL24B04XMM840VQLTW	-	-	-
716	Education Building	Office 7.316	2	65	2'x4' Troffer Recessed Fluorescent, (3) 48", Super T-8 lamp, Instant Start Ballast, NLO (BF: .85-.95) Prismatic Acrylic Diffuser	2	26	Recessed 2'x4' Troffer LED Light Fixture. (1) 26W			3640	0.13	0.05	473	187	GE LPL24B04XMM840VQLTW	-	-	-
717	Education Building	Open Office 7.302	10	65	2'x4' Troffer Recessed Fluorescent, (3) 48", Super T-8 lamp, Instant Start Ballast, NLO (BF: .85-.95) Prismatic Acrylic Diffuser	10	26	Recessed 2'x4' Troffer LED Light Fixture. (1) 26W			3640	0.65	0.26	2,365	937	GE LPL24B04XMM840VQLTW	-	-	-
718	Education Building	Open Office 7.302	2	87	2'x4' Troffer Recessed Fluorescent, (4) 48", Super T-8 lamp, Instant Start Ballast, NLO (BF: .85-.95) Prismatic Acrylic Diffuser	2	26	Recessed 2'x4' Troffer LED Light Fixture. (1) 26W			3640	0.17	0.05	631	187	GE LPL24B04XMM840VQLTW	-	-	-
719	Education Building	Supply Storage 7.303	1	43	2'x4' Troffer Recessed Fluorescent, (2) 48", Super T-8 lamp, Instant Start Ballast, NLO (BF: .85-.95) Prismatic Acrylic Diffuser	1	26	Recessed 2'x4' Troffer LED Light Fixture. (1) 26W			520	0.04	0.03	23	13	GE LPL24B04XMM840VQLTW	-	-	-
720	Education Building	Office 7.301	2	65	2'x4' Troffer Recessed Fluorescent, (3) 48", Super T-8 lamp, Instant Start Ballast, NLO (BF: .85-.95) Prismatic Acrylic Diffuser	2	26	Recessed 2'x4' Troffer LED Light Fixture. (1) 26W	1		2730	0.13	0.05	473	187	GE LPL24B04XMM840VQLTW	-	-	-
721	Education Building	Conference Room 7.325	6	65	2'x4' Troffer Recessed Fluorescent, (3) 48", Super T-8 lamp, Instant Start Ballast, NLO (BF: .85-.95) Prismatic Acrylic Diffuser	6	26	Recessed 2'x4' Troffer LED Light Fixture. (1) 26W			1560	0.39	0.15	608	241	GE LPL24B04XMM840VQLTW	-	-	-
722	Education Building	Office 7.324	4	65	2'x4' Troffer Recessed Fluorescent, (3) 48", Super T-8 lamp, Instant Start Ballast, NLO (BF: .85-.95) Prismatic Acrylic Diffuser	4	26	Recessed 2'x4' Troffer LED Light Fixture. (1) 26W		1	2730	0.26	0.10	946	375	GE LPL24B04XMM840VQLTW	-	-	-
723	Education Building	Copy Room 7.321	4	43	2'x4' Troffer Recessed Fluorescent, (2) 48", Super T-8 lamp, Instant Start Ballast, NLO (BF: .85-.95) Prismatic Acrylic Diffuser	4	26	Recessed 2'x4' Troffer LED Light Fixture. (1) 26W			3640	0.17	0.10	631	375	GE LPL24B04XMM840VQLTW	-	-	-
724	Education Building	Staff Mens Restroom 7.322	1	43	4' Wraparound; Tamper-Proof Surface Mounted Fluorescent, (2) 48", Super T-8 lamp, Instant Start Ballast, NLO (BF: .85-.95) Prismatic Acrylic Diffuser	1	24	Surface Mounted T8 LED Retrofit Lamp with External Driver LED 4' T8 Lamp (2) 12W Lamps	1		1092	0.04	0.02	63	35	-	GE 34235 LEDT8/LC/G/4/840	GE 21378 LED/DR/D2L/LW	-
725	Education Building	Staff Womens Restroom 7.323	1	43	4' Wraparound; Tamper-Proof Surface Mounted Fluorescent, (2) 48", Super T-8 lamp, Instant Start Ballast, NLO (BF: .85-.95) Prismatic Acrylic Diffuser	1	24	Surface Mounted T8 LED Retrofit Lamp with External Driver LED 4' T8 Lamp (2) 12W Lamps	1		1092	0.04	0.02	63	35	-	GE 34235 LEDT8/LC/G/4/840	GE 21378 LED/DR/D2L/LW	-
726	Education Building	Office 7.320	2	65	2'x4' Troffer Recessed Fluorescent, (3) 48", Super T-8 lamp, Instant Start Ballast, NLO (BF: .85-.95) Prismatic Acrylic Diffuser	2	26	Recessed 2'x4' Troffer LED Light Fixture. (1) 26W			3640	0.13	0.05	473	187	GE LPL24B04XMM840VQLTW	-	-	-
727	Education Building	Office 7.319	2	65	2'x4' Troffer Recessed Fluorescent, (3) 48", Super T-8 lamp, Instant Start Ballast, NLO (BF: .85-.95) Prismatic Acrylic Diffuser	2	26	Recessed 2'x4' Troffer LED Light Fixture. (1) 26W			3640	0.13	0.05	473	187	GE LPL24B04XMM840VQLTW	-	-	-
728	Education Building	Office 7.318	2	65	2'x4' Troffer Recessed Fluorescent, (3) 48", Super T-8 lamp, Instant Start Ballast, NLO (BF: .85-.95) Prismatic Acrylic Diffuser	2	26	Recessed 2'x4' Troffer LED Light Fixture. (1) 26W			3640	0.13	0.05	473	187	GE LPL24B04XMM840VQLTW	-	-	-
729	Education Building	Entry Vestibule	1	65	2'x4' Troffer Recessed Fluorescent, (3) 48", Super T-8 lamp, Instant Start Ballast, NLO (BF: .85-.95) Prismatic Acrylic Diffuser	1	26	Recessed 2'x4' Troffer LED Light Fixture. (1) 26W			8760	0.06	0.03	569	225	GE LPL24B04XMM840VQLTW	-	-	-
730	Education Building	Entry Vestibule	1	19	Universal Face Exit Sign; White Surface Mounted Compact Fluorescent, twin, (2) 7W lamp (No Diffuser)	1	3	Surface Mounted Universal Face Exit Sign; White LED Light Fixture. (1) 3W			8760	0.02	0.00	166	26	TCP 22743 RD LED EXIT BBU WH HOUSING	-	-	-
731	Education Building	Main Corridor	6	43	2'x4' Troffer Recessed Fluorescent, (2) 48", Super T-8 lamp, Instant Start Ballast, NLO (BF: .85-.95) Prismatic Acrylic Diffuser	6	26	Recessed 2'x4' Troffer LED Light Fixture. (1) 26W			6570	0.26	0.15	1,708	1,015	GE LPL24B04XMM840VQLTW	-	-	-
732	Education Building	Main Corridor	7	65	2'x4' Troffer Recessed Fluorescent, (3) 48", Super T-8 lamp, Instant Start Ballast, NLO (BF: .85-.95) Prismatic Acrylic Diffuser	7	26	Recessed 2'x4' Troffer LED Light Fixture. (1) 26W			8760	0.45	0.18	3,985	1,578	GE LPL24B04XMM840VQLTW	-	-	-
733	Education Building	Main Corridor	1	19	Universal Face Exit Sign; White Surface Mounted Compact Fluorescent, twin, (2) 7W lamp (No Diffuser)	1	3	Surface Mounted Universal Face Exit Sign; White LED Light Fixture. (1) 3W			8760	0.02	0.00	166	26	TCP 22743 RD LED EXIT BBU WH HOUSING	-	-	-
734	Education Building	Main Corridor	1	3	Universal Face Exit Sign; Black Surface Mounted EXIT C172Light Emitting Diode, (2) 1.5W lamp, Dual Sided (No Diffuser)	1	3	Existing luminaire to remain as is No Retrofit. To remain as is.			8760	0.00	0.00	25	25	-	-	-	-
735	Education Building	Rear Entry Vestibule	1	65	2'x4' Troffer Recessed Fluorescent, (3) 48", Super T-8 lamp, Instant Start Ballast, NLO (BF: .85-.95) Prismatic Acrylic Diffuser	1	26	Recessed 2'x4' Troffer LED Light Fixture. (1) 26W			8760	0.06	0.03	569	225	GE LPL24B04XMM840VQLTW	-	-	-
736	Education Building	Rear Entry Vestibule	1	3	Universal Face Exit Sign; Black Surface Mounted EXIT C172Light Emitting Diode, (2) 1.5W lamp, Dual Sided (No Diffuser)	1	3	Existing luminaire to remain as is No Retrofit. To remain as is.			8760	0.00	0.00	25	25	-	-	-	-
737	Education Building	Penthouse Mechanical Room 8.001	1	43	4' Vanity Wall Mounted Fluorescent, (2) 48", Super T-8 lamp, Instant Start Ballast, NLO (BF: .85-.95) Frosted Glass Lens	1	24	Wall Mounted T8 LED Retrofit Lamp with External Driver LED 4' T8 Lamp (2) 12W Lamps			520	0.04	0.02	23	12	-	GE 34235 LEDT8/LC/G/4/840	GE 21378 LED/DR/D2L/LW	-
738	Education Building	Penthouse Mechanical Room 8.001	34	43	4' Industrial Chain Mounted Fluorescent, (2) 48", Super T-8 lamp, Instant Start Ballast, NLO (BF: .85-.95) (No Diffuser)	34	24	Chain Mounted T8 LED Retrofit Lamp with External Driver LED 4' T8 Lamp (2) 12W Lamps			520	1.47	0.81	766	420	-	GE 34235 LEDT8/LC/G/4/840	GE 21378 LED/DR/D2L/LW	-
739	Education Building	Penthouse Mechanical Room 8.001	1	19	Universal Face Exit Sign; White Surface Mounted Compact Fluorescent, twin, (2) 7W lamp (No Diffuser)	1	3	Surface Mounted Universal Face Exit Sign; White LED Light Fixture. (1) 3W			8760	0.02	0.00	166	26	TCP 22743 RD LED EXIT BBU WH HOUSING	-	-	-
740	Education Building	Storage Room	2	43	4' Wraparound; Tamper-Proof Chain Mounted Fluorescent, (2) 48", Super T-8 lamp, Instant Start Ballast, NLO (BF: .85-.95) Prismatic Acrylic Diffuser	2	24	Chain Mounted T8 LED Retrofit Lamp with External Driver LED 4' T8 Lamp (2) 12W Lamps			200	0.09	0.05	17	10	-	GE 34235 LEDT8/LC/G/4/840	GE 21378 LED/DR/D2L/LW	-

Line #	Facility Area	Space	Pre Fixture Qty	Pre Watts/ Fixt	Pre Description	Post Fixture Qty	Post Watt/ Fixt	Post Description	Wallswitch Sensor	Ceiling Sensor	Hours of Operation	Base kW	Proposed kW	Base kWh	Proposed kWh	Luminaire Part #	Lamp Part #	Driver Part#	Misc. Parts
741	Education Building	Electrical Shop	22	43	4' Industrial Chain Mounted Fluorescent, (2) 48", Super T-8 lamp, Instant Start Ballast, NLO (BF: .85-.95) (No Diffuser)	22	24	Chain Mounted T8 LED Retrofit Lamp with External Driver LED 4' T8 Lamp (2) 12W Lamps			520	0.95	0.52	496	272	-	GE 34235 LEDT8/LC/G/4/840	GE 21378 LED/DR/D2L/LW	-
742	Education Building	Security Panel Closet 8.002	2	43	4' Wraparound; Tamper-Proof Chain Mounted Fluorescent, (2) 48", Super T-8 lamp, Instant Start Ballast, NLO (BF: .85-.95) Prismatic Acrylic Diffuser	2	24	Chain Mounted T8 LED Retrofit Lamp with External Driver LED 4' T8 Lamp (2) 12W Lamps			520	0.09	0.05	45	25	-	GE 34235 LEDT8/LC/G/4/840	GE 21378 LED/DR/D2L/LW	-
743	Education Building	Main Corridor 8.600	38	43	2'x4' Troffer Recessed Fluorescent, (2) 48", Super T-8 lamp, Instant Start Ballast, NLO (BF: .85-.95) Prismatic Acrylic Diffuser	38	26	Recessed 2'x4' Troffer LED Light Fixture. (1) 26W			6570	1.65	0.98	10,815	6,426	GE LPL24B04XMM840VQLTW	-	-	-
744	Education Building	Main Corridor 8.600	1	65	2'x4' Troffer Recessed Fluorescent, (3) 48", Super T-8 lamp, Instant Start Ballast, NLO (BF: .85-.95) Prismatic Acrylic Diffuser	1	26	Recessed 2'x4' Troffer LED Light Fixture. (1) 26W			6570	0.06	0.03	427	169	GE LPL24B04XMM840VQLTW	-	-	-
745	Education Building	Main Corridor 8.600	5	19	Universal Face Exit Sign; White Surface Mounted Compact Fluorescent, twin, (2) 7W lamp (No Diffuser)	5	3	Surface Mounted Universal Face Exit Sign; White LED Light Fixture. (1) 3W			8760	0.09	0.01	830	130	TCP 22743 RD LED EXIT BBU WH HOUSING	-	-	-
746	Education Building	Classroom 8.601	10	65	2'x4' Troffer Recessed Fluorescent, (3) 48", Super T-8 lamp, Instant Start Ballast, NLO (BF: .85-.95) Prismatic Acrylic Diffuser	10	26	Recessed 2'x4' Troffer LED Light Fixture. (1) 26W			2600	0.65	0.26	1,689	669	GE LPL24B04XMM840VQLTW	-	-	-
747	Education Building	Education Office E19	2	65	2'x4' Troffer Recessed Fluorescent, (3) 48", Super T-8 lamp, Instant Start Ballast, NLO (BF: .85-.95) Prismatic Acrylic Diffuser	2	26	Recessed 2'x4' Troffer LED Light Fixture. (1) 26W	1		2730	0.13	0.05	473	187	GE LPL24B04XMM840VQLTW	-	-	-
748	Education Building	Education Office E19	2	65	2'x4' Troffer Recessed Fluorescent, (3) 48", Super T-8 lamp, Instant Start Ballast, NLO (BF: .85-.95) Prismatic Acrylic Diffuser	2	26	Recessed 2'x4' Troffer LED Light Fixture. (1) 26W	1		2730	0.13	0.05	473	187	GE LPL24B04XMM840VQLTW	-	-	-
749	Education Building	Womens Staff Restroom 8.405	1	43	4' Wraparound; Tamper-Proof Surface Mounted Fluorescent, (2) 48", Super T-8 lamp, Instant Start Ballast, NLO (BF: .85-.95) Prismatic Acrylic Diffuser	1	24	Surface Mounted T8 LED Retrofit Lamp with External Driver LED 4' T8 Lamp (2) 12W Lamps			1456	0.04	0.02	63	35	-	GE 34235 LEDT8/LC/G/4/840	GE 21378 LED/DR/D2L/LW	-
750	Education Building	Mens Staff 8.404 Restroom	1	43	4' Wraparound; Tamper-Proof Surface Mounted Fluorescent, (2) 48", Super T-8 lamp, Instant Start Ballast, NLO (BF: .85-.95) Prismatic Acrylic Diffuser	1	24	Surface Mounted T8 LED Retrofit Lamp with External Driver LED 4' T8 Lamp (2) 12W Lamps			1456	0.04	0.02	63	35	-	GE 34235 LEDT8/LC/G/4/840	GE 21378 LED/DR/D2L/LW	-
751	Education Building	Classroom Supply 8.403	4	43	4' Wraparound; Tamper-Proof Pendant Mounted Fluorescent, (2) 48", Super T-8 lamp, Instant Start Ballast, NLO (BF: .85-.95) Prismatic Acrylic Diffuser	4	24	Pendant Mounted T8 LED Retrofit Lamp with External Driver LED 4' T8 Lamp (2) 12W Lamps			1560	0.17	0.10	270	148	-	GE 34235 LEDT8/LC/G/4/840	GE 21378 LED/DR/D2L/LW	-
752	Education Building	Office 8.406	2	65	2'x4' Troffer Recessed Fluorescent, (3) 48", Super T-8 lamp, Instant Start Ballast, NLO (BF: .85-.95) Prismatic Acrylic Diffuser	2	26	Recessed 2'x4' Troffer LED Light Fixture. (1) 26W			3640	0.13	0.05	473	187	GE LPL24B04XMM840VQLTW	-	-	-
753	Education Building	Office 8.407	2	65	2'x4' Troffer Recessed Fluorescent, (3) 48", Super T-8 lamp, Instant Start Ballast, NLO (BF: .85-.95) Prismatic Acrylic Diffuser	2	26	Recessed 2'x4' Troffer LED Light Fixture. (1) 26W			3640	0.13	0.05	473	187	GE LPL24B04XMM840VQLTW	-	-	-
754	Education Building	Office 8.408	2	65	2'x4' Troffer Recessed Fluorescent, (3) 48", Super T-8 lamp, Instant Start Ballast, NLO (BF: .85-.95) Prismatic Acrylic Diffuser	2	26	Recessed 2'x4' Troffer LED Light Fixture. (1) 26W			3640	0.13	0.05	473	187	GE LPL24B04XMM840VQLTW	-	-	-
755	Education Building	Office 8.409	2	65	2'x4' Troffer Recessed Fluorescent, (3) 48", Super T-8 lamp, Instant Start Ballast, NLO (BF: .85-.95) Prismatic Acrylic Diffuser	2	26	Recessed 2'x4' Troffer LED Light Fixture. (1) 26W			3640	0.13	0.05	473	187	GE LPL24B04XMM840VQLTW	-	-	-
756	Education Building	Classroom 8.604	10	65	2'x4' Troffer Recessed Fluorescent, (3) 48", Super T-8 lamp, Instant Start Ballast, NLO (BF: .85-.95) Prismatic Acrylic Diffuser	10	26	Recessed 2'x4' Troffer LED Light Fixture. (1) 26W			2600	0.65	0.26	1,689	669	GE LPL24B04XMM840VQLTW	-	-	-
757	Education Building	Classroom 8.607	10	65	2'x4' Troffer Recessed Fluorescent, (3) 48", Super T-8 lamp, Instant Start Ballast, NLO (BF: .85-.95) Prismatic Acrylic Diffuser	10	26	Recessed 2'x4' Troffer LED Light Fixture. (1) 26W			2600	0.65	0.26	1,689	669	GE LPL24B04XMM840VQLTW	-	-	-
758	Education Building	Classroom 8.613	7	143	8' Vapor Proof Chain Mounted Fluorescent, (2) 96", STD lamp Prismatic Acrylic Diffuser	7	64	Chain Mounted 8' Vapor Proof LED Light Fixture. (1) 65W			2600	1.00	0.45	2,595	1,171	FEM L96 9000LM LPPFL MD MVOLT GZ10 40K 80CRI TRS MEZ105299	-	-	-
759	Education Building	Classroom 8.610	10	65	2'x4' Troffer Recessed Fluorescent, (3) 48", Super T-8 lamp, Instant Start Ballast, NLO (BF: .85-.95) Prismatic Acrylic Diffuser	10	26	Recessed 2'x4' Troffer LED Light Fixture. (1) 26W			2600	0.65	0.26	1,689	669	GE LPL24B04XMM840VQLTW	-	-	-
760	Education Building	Classroom 8.616	10	65	2'x4' Troffer Recessed Fluorescent, (3) 48", Super T-8 lamp, Instant Start Ballast, NLO (BF: .85-.95) Prismatic Acrylic Diffuser	10	26	Recessed 2'x4' Troffer LED Light Fixture. (1) 26W			2600	0.65	0.26	1,689	669	GE LPL24B04XMM840VQLTW	-	-	-
761	Education Building	Classroom 8.619	4	143	8' Vapor Proof Chain Mounted Fluorescent, (2) 96", STD lamp Prismatic Acrylic Diffuser	4	64	Chain Mounted 8' Vapor Proof LED Light Fixture. (1) 65W			2600	0.57	0.26	1,483	669	FEM L96 9000LM LPPFL MD MVOLT GZ10 40K 80CRI TRS MEZ105299	-	-	-
762	Education Building	Classroom 8.625	4	143	8' Vapor Proof Chain Mounted Fluorescent, (2) 96", STD lamp Prismatic Acrylic Diffuser	4	64	Chain Mounted 8' Vapor Proof LED Light Fixture. (1) 65W			2600	0.57	0.26	1,483	669	FEM L96 9000LM LPPFL MD MVOLT GZ10 40K 80CRI TRS MEZ105299	-	-	-
763	Education Building	Classroom 8.622	10	65	2'x4' Troffer Recessed Fluorescent, (3) 48", Super T-8 lamp, Instant Start Ballast, NLO (BF: .85-.95) Prismatic Acrylic Diffuser	10	26	Recessed 2'x4' Troffer LED Light Fixture. (1) 26W			2600	0.65	0.26	1,689	669	GE LPL24B04XMM840VQLTW	-	-	-
764	Education Building	Classroom 8.628	10	65	2'x4' Troffer Recessed Fluorescent, (3) 48", Super T-8 lamp, Instant Start Ballast, NLO (BF: .85-.95) Prismatic Acrylic Diffuser	10	26	Recessed 2'x4' Troffer LED Light Fixture. (1) 26W			2600	0.65	0.26	1,689	669	GE LPL24B04XMM840VQLTW	-	-	-
765	Education Building	Classroom 8.631	10	65	2'x4' Troffer Recessed Fluorescent, (3) 48", Super T-8 lamp, Instant Start Ballast, NLO (BF: .85-.95) Prismatic Acrylic Diffuser	10	26	Recessed 2'x4' Troffer LED Light Fixture. (1) 26W			2600	0.65	0.26	1,689	669	GE LPL24B04XMM840VQLTW	-	-	-
766	Education Building	Classroom 8.634	7	143	8' Vapor Proof Chain Mounted Fluorescent, (2) 96", STD lamp Prismatic Acrylic Diffuser	7	64	Chain Mounted 8' Vapor Proof LED Light Fixture. (1) 65W			2600	1.00	0.45	2,595	1,171	FEM L96 9000LM LPPFL MD MVOLT GZ10 40K 80CRI TRS MEZ105299	-	-	-
767	Education Building	Classroom 8.634	1	87	2'x4' Troffer Recessed Fluorescent, (4) 48", Super T-8 lamp, Instant Start Ballast, NLO (BF: .85-.95) Prismatic Acrylic Diffuser	1	26	Recessed 2'x4' Troffer LED Light Fixture. (1) 26W			2600	0.09	0.03	225	67	GE LPL24B04XMM840VQLTW	-	-	-
768	Education Building	Classroom 8.638	12	65	2'x4' Troffer Recessed Fluorescent, (3) 48", Super T-8 lamp, Instant Start Ballast, NLO (BF: .85-.95) Prismatic Acrylic Diffuser	12	26	Recessed 2'x4' Troffer LED Light Fixture. (1) 26W			2600	0.78	0.31	2,027	803	GE LPL24B04XMM840VQLTW	-	-	-
769	Education Building	Classroom 8.638	1	3	Universal Face Exit Sign; White Surface Mounted EXIT C172Light Emitting Diode, (2) 1.5W lamp, Dual Sided (No Diffuser)	1	3	Existing luminaire to remain as is No Retrofit. To remain as is.			8760	0.00	0.00	25	25	-	-	-	-
770	Education Building	Custodial Closet 8.643	1	43	4' Wraparound; Tamper-Proof Surface Mounted Fluorescent, (2) 48", Super T-8 lamp, Instant Start Ballast, NLO (BF: .85-.95) Prismatic Acrylic Diffuser	1	24	Surface Mounted T8 LED Retrofit Lamp with External Driver LED 4' T8 Lamp (2) 12W Lamps			1560	0.04	0.02	68	37	-	GE 34235 LEDT8/LC/G/4/840	GE 21378 LED/DR/D2L/LW	-
771	Education Building	Staff Restroom 8.644	1	43	4' Wraparound; Tamper-Proof Surface Mounted Fluorescent, (2) 48", Super T-8 lamp, Instant Start Ballast, NLO (BF: .85-.95) Prismatic Acrylic Diffuser	1	24	Surface Mounted T8 LED Retrofit Lamp with External Driver LED 4' T8 Lamp (2) 12W Lamps			1456	0.04	0.02	63	35	-	GE 34235 LEDT8/LC/G/4/840	GE 21378 LED/DR/D2L/LW	-
772	Education Building	Custodial Closet 8.684	1	43	4' Wraparound; Tamper-Proof Surface Mounted Fluorescent, (2) 48", Super T-8 lamp, Instant Start Ballast, NLO (BF: .85-.95) Prismatic Acrylic Diffuser	1	24	Surface Mounted T8 LED Retrofit Lamp with External Driver LED 4' T8 Lamp (2) 12W Lamps			1560	0.04	0.02	68	37	-	GE 34235 LEDT8/LC/G/4/840	GE 21378 LED/DR/D2L/LW	-
773	Education Building	Work Room / Copy 8.683	6	65	2'x4' Troffer Recessed Fluorescent, (3) 48", Super T-8 lamp, Instant Start Ballast, NLO (BF: .85-.95) Prismatic Acrylic Diffuser	6	26	Recessed 2'x4' Troffer LED Light Fixture. (1) 26W			3640	0.39	0.15	1,419	562	GE LPL24B04XMM840VQLTW	-	-	-
774	Education Building	Library E21	21	65	2'x4' Troffer Recessed Fluorescent, (3) 48", Super T-8 lamp, Instant Start Ballast, NLO (BF: .85-.95) Prismatic Acrylic Diffuser	21	26	Recessed 2'x4' Troffer LED Light Fixture. (1) 26W			4056	1.36	0.54	5,535	2,192	GE LPL24B04XMM840VQLTW	-	-	-
775	Education Building	Library E21	2	3	Universal Face Exit Sign; White Surface Mounted EXIT C172Light Emitting Diode, (2) 1.5W lamp, Dual Sided (No Diffuser)	2	3	Existing luminaire to remain as is No Retrofit. To remain as is.			8760	0.01	0.01	49	49	-	-	-	-
776	Education Building	Small Hall	1	43	2'x4' Troffer Recessed Fluorescent, (2) 48", Super T-8 lamp, Instant Start Ballast, NLO (BF: .85-.95) Prismatic Acrylic Diffuser	1	26	Recessed 2'x4' Troffer LED Light Fixture. (1) 26W			4056	0.04	0.03	176	104	GE LPL24B04XMM840VQLTW	-	-	-
777	Education Building	Library Office 8.504	2	65	2'x4' Troffer Recessed Fluorescent, (3) 48", Super T-8 lamp, Instant Start Ballast, NLO (BF: .85-.95) Prismatic Acrylic Diffuser	2	26	Recessed 2'x4' Troffer LED Light Fixture. (1) 26W			3640	0.13	0.05	473	187	GE LPL24B04XMM840VQLTW	-	-	-
778	Education Building	Library Office 8.505	2	43	2'x4' Troffer Recessed Fluorescent, (2) 48", Super T-8 lamp, Instant Start Ballast, NLO (BF: .85-.95) Prismatic Acrylic Diffuser	2	26	Recessed 2'x4' Troffer LED Light Fixture. (1) 26W			3640	0.09	0.05	315	187	GE LPL24B04XMM840VQLTW	-	-	-
779	Education Building	Library Office 8.503	3	65	2'x4' Troffer Recessed Fluorescent, (3) 48", Super T-8 lamp, Instant Start Ballast, NLO (BF: .85-.95) Prismatic Acrylic Diffuser	3	26	Recessed 2'x4' Troffer LED Light Fixture. (1) 26W			3640	0.19	0.08	710	281	GE LPL24B04XMM840VQLTW	-	-	-

Line #	Facility Area	Space	Pre Fixture Qty	Pre Watts/ Fixt	Pre Description	Post Fixture Qty	Post Watt/ Fixt	Post Description	Wallswitch Sensor	Ceiling Sensor	Hours of Operation	Base kW	Proposed kW	Base kWh	Proposed kWh	Luminaire Part #	Lamp Part #	Driver Part#	Misc. Parts
780	Education Building	Law Library Computer Room 8.502	4	65	2'x4' Troffer Recessed Fluorescent, (3) 48", Super T-8 lamp, Instant Start Ballast, NLO (BF: .85-.95) Prismatic Acrylic Diffuser	4	26	Recessed 2'x4' Troffer LED Light Fixture. (1) 26W		1	1950	0.26	0.10	676	268	GE LPL24B04XMM840VQLTW	-	-	-
781	Education Building	Test Center 8.681	3	65	2'x4' Troffer Recessed Fluorescent, (3) 48", Super T-8 lamp, Instant Start Ballast, NLO (BF: .85-.95) Deep Cell Parabolic Diffuser	3	26	Recessed 2'x4' Troffer LED Light Fixture. (1) 26W			1560	0.19	0.08	304	120	GE LPL24B04XMM840VQLTW	-	-	-
782	Education Building	Classroom 8.678	10	65	2'x4' Troffer Recessed Fluorescent, (3) 48", Super T-8 lamp, Instant Start Ballast, NLO (BF: .85-.95) Prismatic Acrylic Diffuser	10	26	Recessed 2'x4' Troffer LED Light Fixture. (1) 26W			2600	0.65	0.26	1,689	669	GE LPL24B04XMM840VQLTW	-	-	-
783	Education Building	Classroom 8.675	10	65	2'x4' Troffer Recessed Fluorescent, (3) 48", Super T-8 lamp, Instant Start Ballast, NLO (BF: .85-.95) Prismatic Acrylic Diffuser	10	26	Recessed 2'x4' Troffer LED Light Fixture. (1) 26W			2600	0.65	0.26	1,689	669	GE LPL24B04XMM840VQLTW	-	-	-
784	Education Building	Building Trades Classroom 8.666	4	143	8' Vapor Proof Chain Mounted Fluorescent, (2) 96", STD lamp Prismatic Acrylic Diffuser	4	64	Chain Mounted 8' Vapor Proof LED Light Fixture. (1) 65W			2600	0.57	0.26	1,483	669	FEM L96 9000LM LPPFL MD MVOLT GZ10 40K 80CRI TRS MEZ105299	-	-	-
785	Education Building	Building Trades Shop	6	143	8' Vapor Proof Chain Mounted Fluorescent, (2) 96", STD lamp Prismatic Acrylic Diffuser	6	64	Chain Mounted 8' Vapor Proof LED Light Fixture. (1) 65W			2600	0.86	0.39	2,224	1,004	FEM L96 9000LM LPPFL MD MVOLT GZ10 40K 80CRI TRS MEZ105299	-	-	-
786	Education Building	Building Trades Shop	4	43	4' Industrial Surface Mounted Fluorescent, (2) 48", Super T-8 lamp, Instant Start Ballast, NLO (BF: .85-.95) (No Diffuser)	4	24	Surface Mounted T8 LED Retrofit Lamp with External Driver LED 4' T8 Lamp (2) 12W Lamps			2600	0.17	0.10	451	247	-	GE 34235 LEDT8/LC/G/4/840	GE 21378 LED/DR/D2L/LW	-
787	Education Building	Building Trades Shop	2	266	2'x2' Troffer Recessed Metal Halide, (1) 250W lamp Prismatic Acrylic Diffuser	2	49	Recessed Chip On Board (COB) Type Screw-in / Bypass Existing Ballast Light Emitting Diode Lamp, Screw-in, (1) 54W lamp			2600	0.53	0.10	1,384	253	-	KEYSTONE KT-LED54HID-EX39-840-D	-	-
788	Education Building	Classroom 8.669	10	65	2'x4' Troffer Recessed Fluorescent, (3) 48", Super T-8 lamp, Instant Start Ballast, NLO (BF: .85-.95) Prismatic Acrylic Diffuser	10	26	Recessed 2'x4' Troffer LED Light Fixture. (1) 26W			2600	0.65	0.26	1,689	669	GE LPL24B04XMM840VQLTW	-	-	-
789	Education Building	Classroom 8.663	10	65	2'x4' Troffer Recessed Fluorescent, (3) 48", Super T-8 lamp, Instant Start Ballast, NLO (BF: .85-.95) Prismatic Acrylic Diffuser	10	26	Recessed 2'x4' Troffer LED Light Fixture. (1) 26W			2600	0.65	0.26	1,689	669	GE LPL24B04XMM840VQLTW	-	-	-
790	Education Building	Classroom 8.660	4	143	8' Vapor Proof Chain Mounted Fluorescent, (2) 96", STD lamp Prismatic Acrylic Diffuser	4	64	Chain Mounted 8' Vapor Proof LED Light Fixture. (1) 65W			2600	0.57	0.26	1,483	669	FEM L96 9000LM LPPFL MD MVOLT GZ10 40K 80CRI TRS MEZ105299	-	-	-
791	Education Building	Electrical Trades 8.657	22	65	2'x4' Troffer Recessed Fluorescent, (3) 48", Super T-8 lamp, Instant Start Ballast, NLO (BF: .85-.95) Prismatic Acrylic Diffuser	22	26	Recessed 2'x4' Troffer LED Light Fixture. (1) 26W			2600	1.43	0.57	3,717	1,472	GE LPL24B04XMM840VQLTW	-	-	-
792	Education Building	Classroom 8.634	7	143	8' Vapor Proof Chain Mounted Fluorescent, (2) 96", STD lamp Prismatic Acrylic Diffuser	7	64	Chain Mounted 8' Vapor Proof LED Light Fixture. (1) 65W			2600	1.00	0.45	2,595	1,171	FEM L96 9000LM LPPFL MD MVOLT GZ10 40K 80CRI TRS MEZ105299	-	-	-
793	Education Building	Classroom 8.634	1	43	4' Wraparound; Tamper-Proof Surface Mounted Fluorescent, (2) 48", Super T-8 lamp, Instant Start Ballast, NLO (BF: .85-.95) Prismatic Acrylic Diffuser	1	24	Surface Mounted T8 LED Retrofit Lamp with External Driver LED 4' T8 Lamp (2) 12W Lamps			2600	0.04	0.02	113	62	-	GE 34235 LEDT8/LC/G/4/840	GE 21378 LED/DR/D2L/LW	-
794	Education Building	Corridor 8.637	4	43	2'x4' Troffer Recessed Fluorescent, (2) 48", Super T-8 lamp, Instant Start Ballast, NLO (BF: .85-.95) Prismatic Acrylic Diffuser	4	26	Recessed 2'x4' Troffer LED Light Fixture. (1) 26W			6570	0.17	0.10	1,138	676	GE LPL24B04XMM840VQLTW	-	-	-
795	Education Building	Corridor 8.637	2	3	Universal Face Exit Sign; White Surface Mounted EXIT C172Light Emitting Diode, (2) 1.5W lamp, Dual Sided (No Diffuser)	2	3	Existing luminaire to remain as is No Retrofit. To remain as is.			8760	0.01	0.01	49	49	-	-	-	-
796	Education Building	Shop Material Storage 8.647	3	65	2'x4' Troffer Recessed Fluorescent, (3) 48", Super T-8 lamp, Instant Start Ballast, NLO (BF: .85-.95) Prismatic Acrylic Diffuser	3	26	Recessed 2'x4' Troffer LED Light Fixture. (1) 26W			1560	0.19	0.08	304	120	GE LPL24B04XMM840VQLTW	-	-	-
797	Education Building	Breakroom 8.646	3	65	2'x4' Troffer Recessed Fluorescent, (3) 48", Super T-8 lamp, Instant Start Ballast, NLO (BF: .85-.95) Prismatic Acrylic Diffuser	3	26	Recessed 2'x4' Troffer LED Light Fixture. (1) 26W			1560	0.19	0.08	304	120	GE LPL24B04XMM840VQLTW	-	-	-
798	Education Building	Staff Restroom 8.645	1	43	4' Wraparound; Tamper-Proof Surface Mounted Fluorescent, (2) 48", Super T-8 lamp, Instant Start Ballast, NLO (BF: .85-.95) Prismatic Acrylic Diffuser	1	24	Surface Mounted T8 LED Retrofit Lamp with External Driver LED 4' T8 Lamp (2) 12W Lamps			1456	0.04	0.02	63	35	-	GE 34235 LEDT8/LC/G/4/840	GE 21378 LED/DR/D2L/LW	-
799	Education Building	Corridor 9.705	3	43	2'x4' Troffer Recessed Fluorescent, (2) 48", Super T-8 lamp, Instant Start Ballast, NLO (BF: .85-.95) Prismatic Acrylic Diffuser	3	26	Recessed 2'x4' Troffer LED Light Fixture. (1) 26W			8760	0.13	0.08	1,138	676	GE LPL24B04XMM840VQLTW	-	-	-
800	Education Building	Corridor 9.705	1	3	Universal Face Exit Sign; White Surface Mounted EXIT C172Light Emitting Diode, (2) 1.5W lamp, Dual Sided (No Diffuser)	1	3	Existing luminaire to remain as is No Retrofit. To remain as is.			8760	0.00	0.00	25	25	-	-	-	-
801	Education Building	Penthouse Mechanical Room 9.001	27	43	4' Industrial Chain Mounted Fluorescent, (2) 48", Super T-8 lamp, Instant Start Ballast, NLO (BF: .85-.95) (No Diffuser)	27	24	Chain Mounted T8 LED Retrofit Lamp with External Driver LED 4' T8 Lamp (2) 12W Lamps			520	1.17	0.64	608	334	-	GE 34235 LEDT8/LC/G/4/840	GE 21378 LED/DR/D2L/LW	-
802	Education Building	Penthouse Mechanical Room 9.001	1	43	4' Vanity Wall Mounted Fluorescent, (2) 48", Super T-8 lamp, Instant Start Ballast, NLO (BF: .85-.95) Frosted Glass Lens	1	24	Wall Mounted T8 LED Retrofit Lamp with External Driver LED 4' T8 Lamp (2) 12W Lamps			520	0.04	0.02	23	12	-	GE 34235 LEDT8/LC/G/4/840	GE 21378 LED/DR/D2L/LW	-
803	Education Building	Penthouse Mechanical Room 9.001	1	19	Universal Face Exit Sign; White Surface Mounted Compact Fluorescent, twin, (2) 7W lamp (No Diffuser)	1	3	Surface Mounted Universal Face Exit Sign; White LED Light Fixture. (1) 3W			8760	0.02	0.00	166	26	TCP 22743 RD LED EXIT BBU WH HOUSING	-	-	-
804	Education Building	Activity Storage / Electric	10	43	4' Industrial Chain Mounted Fluorescent, (2) 48", Super T-8 lamp, Instant Start Ballast, NLO (BF: .85-.95) (No Diffuser)	10	24	Chain Mounted T8 LED Retrofit Lamp with External Driver LED 4' T8 Lamp (2) 12W Lamps			520	0.43	0.24	225	124	-	GE 34235 LEDT8/LC/G/4/840	GE 21378 LED/DR/D2L/LW	-
805	Education Building	Activity Storage / Electric	2	87	4' Wraparound; Tamper-Proof Surface Mounted Fluorescent, (4) 48", Super T-8 lamp, Instant Start Ballast, NLO (BF: .85-.95) Prismatic Acrylic Diffuser	2	48	Surface Mounted T8 LED Retrofit Lamp with External Driver LED 4' T8 Lamp (4) 12W Lamps			520	0.17	0.10	90	49	-	GE 34235 LEDT8/LC/G/4/840	GE 21379 LED/DR/D4L/LW	-
806	Education Building	Activity Storage / Electric	1	19	Universal Face Exit Sign; White Surface Mounted Compact Fluorescent, twin, (2) 7W lamp (No Diffuser)	1	3	Surface Mounted Universal Face Exit Sign; White LED Light Fixture. (1) 3W			8760	0.02	0.00	166	26	TCP 22743 RD LED EXIT BBU WH HOUSING	-	-	-
807	Education Building	Music Room Office	2	43	2'x4' Troffer Recessed Fluorescent, (2) 48", Super T-8 lamp, Instant Start Ballast, NLO (BF: .85-.95) Prismatic Acrylic Diffuser	2	26	Recessed 2'x4' Troffer LED Light Fixture. (1) 26W	1		2730	0.09	0.05	315	187	GE LPL24B04XMM840VQLTW	-	-	-
808	Education Building	AV Workroom	9	65	2'x4' Troffer Recessed Flanged Fluorescent, (3) 48", Super T-8 lamp, Instant Start Ballast, NLO (BF: .85-.95) Prismatic Acrylic Diffuser	9	36	Recessed Flanged T8 LED Retrofit Lamp with External Driver LED 4' T8 Lamp (3) 12W Lamps			1560	0.58	0.32	912	500	-	GE 34235 LEDT8/LC/G/4/840	GE 21379 LED/DR/D4L/LW	-
809	Education Building	AV Workroom	3	43	4' Wraparound; Tamper-Proof Surface Mounted Fluorescent, (2) 48", Super T-8 lamp, Instant Start Ballast, NLO (BF: .85-.95) Prismatic Acrylic Diffuser	3	24	Surface Mounted T8 LED Retrofit Lamp with External Driver LED 4' T8 Lamp (2) 12W Lamps	1		1170	0.13	0.07	203	111	-	GE 34235 LEDT8/LC/G/4/840	GE 21378 LED/DR/D2L/LW	-
810	Education Building	Office 9.702	4	65	2'x4' Troffer Recessed Flanged Fluorescent, (3) 48", Super T-8 lamp, Instant Start Ballast, NLO (BF: .85-.95) Prismatic Acrylic Diffuser	4	36	Recessed Flanged T8 LED Retrofit Lamp with External Driver LED 4' T8 Lamp (3) 12W Lamps			3640	0.26	0.14	946	519	-	GE 34235 LEDT8/LC/G/4/840	GE 21379 LED/DR/D4L/LW	-
811	Education Building	Activities / Gym Corridor	9	43	2'x4' Troffer Recessed Fluorescent, (2) 48", Super T-8 lamp, Instant Start Ballast, NLO (BF: .85-.95) Prismatic Acrylic Diffuser	9	26	Recessed 2'x4' Troffer LED Light Fixture. (1) 26W			6570	0.39	0.23	2,562	1,522	GE LPL24B04XMM840VQLTW	-	-	-
812	Education Building	Activities / Gym Corridor	2	3	Universal Face Exit Sign; White Surface Mounted EXIT C172Light Emitting Diode, (2) 1.5W lamp, Dual Sided (No Diffuser)	2	3	Existing luminaire to remain as is No Retrofit. To remain as is.			8760	0.01	0.01	49	49	-	-	-	-
813	Education Building	Entry Vestibules	2	87	4' Wraparound; Tamper-Proof Surface Mounted Fluorescent, (4) 48", Super T-8 lamp, Instant Start Ballast, NLO (BF: .85-.95) Prismatic Acrylic Diffuser	2	48	Surface Mounted T8 LED Retrofit Lamp with External Driver LED 4' T8 Lamp (4) 12W Lamps			8760	0.17	0.10	1,518	833	-	GE 34235 LEDT8/LC/G/4/840	GE 21379 LED/DR/D4L/LW	-
814	Education Building	Entry Vestibules	2	3	Universal Face Exit Sign; White Surface Mounted EXIT C172Light Emitting Diode, (2) 1.5W lamp, Dual Sided (No Diffuser)	2	3	Existing luminaire to remain as is No Retrofit. To remain as is.			8760	0.01	0.01	49	49	-	-	-	-
815	Education Building	Office 6.308	6	65	2'x4' Troffer Recessed Fluorescent, (3) 48", Super T-8 lamp, Instant Start Ballast, NLO (BF: .85-.95) Prismatic Acrylic Diffuser	6	26	Recessed 2'x4' Troffer LED Light Fixture. (1) 26W			3640	0.39	0.15	1,419	562	GE LPL24B04XMM840VQLTW	-	-	-
816	Education Building	Music Corridor 6.312	1	43	2'x4' Troffer Recessed Fluorescent, (2) 48", Super T-8 lamp, Instant Start Ballast, NLO (BF: .85-.95) Prismatic Acrylic Diffuser	1	26	Recessed 2'x4' Troffer LED Light Fixture. (1) 26W			8760	0.04	0.03	379	225	GE LPL24B04XMM840VQLTW	-	-	-
817	Education Building	Music Corridor 6.312	1	3	Universal Face Exit Sign; White Surface Mounted EXIT C172Light Emitting Diode, (2) 1.5W lamp, Dual Sided (No Diffuser)	1	3	Existing luminaire to remain as is No Retrofit. To remain as is.			8760	0.00	0.00	25	25	-	-	-	-
818	Education Building	Music Room 1	6	65	2'x4' Troffer Recessed Fluorescent, (3) 48", Super T-8 lamp, Instant Start Ballast, NLO (BF: .85-.95) Prismatic Acrylic Diffuser	6	26	Recessed 2'x4' Troffer LED Light Fixture. (1) 26W			1560	0.39	0.15	608	241	GE LPL24B04XMM840VQLTW	-	-	-

Line #	Facility Area	Space	Pre Fixture Qty	Pre Watts/ Fixt	Pre Description	Post Fixture Qty	Post Watt/ Fixt	Post Description	Wallswitch Sensor	Ceiling Sensor	Hours of Operation	Base kW	Proposed kW	Base kWh	Proposed kWh	Luminaire Part #	Lamp Part #	Driver Part#	Misc. Parts
819	Education Building	Music Room 1	1	43	4' Wraparound; Tamper-Proof Surface Mounted Fluorescent, (2) 48", Super T-8 lamp, Instant Start Ballast, NLO (BF: .85-.95) (No Diffuser)	1	24	Surface Mounted T8 LED Retrofit Lamp with External Driver LED 4' T8 Lamp (2) 12W Lamps			200	0.04	0.02	9	5	-	GE 34235 LEDT8/LC/G/4/840	GE 21378 LED/DR/D2L/LW	-
820	Education Building	Music Room 1	1	43	4' Wraparound; Tamper-Proof Surface Mounted Fluorescent, (2) 48", Super T-8 lamp, Instant Start Ballast, NLO (BF: .85-.95) Prismatic Acrylic Diffuser	1	24	Surface Mounted T8 LED Retrofit Lamp with External Driver LED 4' T8 Lamp (2) 12W Lamps			200	0.04	0.02	9	5	-	GE 34235 LEDT8/LC/G/4/840	GE 21378 LED/DR/D2L/LW	-
821	Education Building	Music Room 1	3	43	4' Wraparound; Tamper-Proof Surface Mounted Fluorescent, (2) 48", Super T-8 lamp, Instant Start Ballast, NLO (BF: .85-.95) Prismatic Acrylic Diffuser	3	24	Surface Mounted T8 LED Retrofit Lamp with External Driver LED 4' T8 Lamp (2) 12W Lamps			520	0.13	0.07	68	37	-	GE 34235 LEDT8/LC/G/4/840	GE 21378 LED/DR/D2L/LW	-
822	Education Building	Music Room 2	6	65	2'x4' Troffer Recessed Fluorescent, (3) 48", Super T-8 lamp, Instant Start Ballast, NLO (BF: .85-.95) Prismatic Acrylic Diffuser	6	26	Recessed 2'x4' Troffer LED Light Fixture. (1) 26W			1560	0.39	0.15	608	241	GE LPL24B04XMM840VQLTW	-	-	-
823	Education Building	Staff Restroom 6.304	1	43	4' Wraparound; Tamper-Proof Surface Mounted Fluorescent, (2) 48", Super T-8 lamp, Instant Start Ballast, NLO (BF: .85-.95) Prismatic Acrylic Diffuser	1	24	Surface Mounted T8 LED Retrofit Lamp with External Driver LED 4' T8 Lamp (2) 12W Lamps			1456	0.04	0.02	63	35	-	GE 34235 LEDT8/LC/G/4/840	GE 21378 LED/DR/D2L/LW	-
824	Education Building	Inmate Restroom 6.310	1	43	4' Wraparound; Tamper-Proof Surface Mounted Fluorescent, (2) 48", Super T-8 lamp, Instant Start Ballast, NLO (BF: .85-.95) Prismatic Acrylic Diffuser	1	24	Surface Mounted T8 LED Retrofit Lamp with External Driver LED 4' T8 Lamp (2) 12W Lamps	1		1092	0.04	0.02	63	35	-	GE 34235 LEDT8/LC/G/4/840	GE 21378 LED/DR/D2L/LW	-
825	Education Building	Custodial Closet	1	43	4' Wraparound; Tamper-Proof Surface Mounted Fluorescent, (2) 48", Super T-8 lamp, Instant Start Ballast, NLO (BF: .85-.95) Prismatic Acrylic Diffuser	1	24	Surface Mounted T8 LED Retrofit Lamp with External Driver LED 4' T8 Lamp (2) 12W Lamps	1		1170	0.04	0.02	68	37	-	GE 34235 LEDT8/LC/G/4/840	GE 21378 LED/DR/D2L/LW	-
826	Education Building	Barber Shop 6.401	16	65	2'x4' Troffer Recessed Fluorescent, (3) 48", Super T-8 lamp, Instant Start Ballast, NLO (BF: .85-.95) Prismatic Acrylic Diffuser	16	26	Recessed 2'x4' Troffer LED Light Fixture. (1) 26W			3640	1.04	0.41	3,784	1,499	GE LPL24B04XMM840VQLTW	-	-	-
827	Education Building	Barber Shop 6.401	13	43	4' Vapor Proof Surface Mounted Fluorescent, (2) 48", Super T-8 lamp, Instant Start Ballast, NLO (BF: .85-.95) Prismatic Acrylic Diffuser	13	24	Surface Mounted T8 LED Retrofit Lamp with External Driver LED 4' T8 Lamp (2) 12W Lamps			3640	0.56	0.31	2,050	1,124	-	GE 34235 LEDT8/LC/G/4/840	GE 21378 LED/DR/D2L/LW	-
828	Education Building	Inmate Restroom 9.807	1	43	4' Wraparound; Tamper-Proof Surface Mounted Fluorescent, (2) 48", Super T-8 lamp, Instant Start Ballast, NLO (BF: .85-.95) Prismatic Acrylic Diffuser	1	24	Surface Mounted T8 LED Retrofit Lamp with External Driver LED 4' T8 Lamp (2) 12W Lamps	1		1092	0.04	0.02	63	35	-	GE 34235 LEDT8/LC/G/4/840	GE 21378 LED/DR/D2L/LW	-
829	Education Building	Shop Equipment 9.810	2	43	4' Wraparound; Tamper-Proof Surface Mounted Fluorescent, (2) 48", Super T-8 lamp, Instant Start Ballast, NLO (BF: .85-.95) Prismatic Acrylic Diffuser	2	24	Surface Mounted T8 LED Retrofit Lamp with External Driver LED 4' T8 Lamp (2) 12W Lamps	1		1170	0.09	0.05	135	74	-	GE 34235 LEDT8/LC/G/4/840	GE 21378 LED/DR/D2L/LW	-
830	Education Building	Barber Shop Office 9.809	1	65	2'x4' Troffer Recessed Flanged Fluorescent, (3) 48", Super T-8 lamp, Instant Start Ballast, NLO (BF: .85-.95) Prismatic Acrylic Diffuser	1	36	Recessed Flanged T8 LED Retrofit Lamp with External Driver LED 4' T8 Lamp (3) 12W Lamps			3640	0.06	0.04	237	130	-	GE 34235 LEDT8/LC/G/4/840	GE 21379 LED/DR/D4L/LW	-
831	Education Building	Barber Shop Office 9.809	2	43	2'x4' Troffer Recessed Flanged Fluorescent, (2) 48", Super T-8 lamp, Instant Start Ballast, NLO (BF: .85-.95) Prismatic Acrylic Diffuser	2	24	Recessed Flanged T8 LED Retrofit Lamp with External Driver LED 4' T8 Lamp (2) 12W Lamps			3640	0.09	0.05	315	173	-	GE 34235 LEDT8/LC/G/4/840	GE 21378 LED/DR/D2L/LW	-
832	Education Building	Northside Weight Room 3.104	16	65	2'x4' Troffer Recessed Flanged Fluorescent, (3) 48", Super T-8 lamp, Instant Start Ballast, NLO (BF: .85-.95) Prismatic Acrylic Diffuser	16	36	Recessed Flanged T8 LED Retrofit Lamp with External Driver LED 4' T8 Lamp (3) 12W Lamps			5824	1.04	0.57	6,055	3,321	-	GE 34235 LEDT8/LC/G/4/840	GE 21379 LED/DR/D4L/LW	-
833	Education Building	Activities Office 3.107	4	65	2'x4' Troffer Recessed Fluorescent, (3) 48", Super T-8 lamp, Instant Start Ballast, NLO (BF: .85-.95) Prismatic Acrylic Diffuser	4	26	Recessed 2'x4' Troffer LED Light Fixture. (1) 26W			3640	0.26	0.10	946	375	GE LPL24B04XMM840VQLTW	-	-	-
834	Education Building	Southside Weight Room 3.102 (high ceiling)	16	65	2'x4' Troffer Recessed Flanged Fluorescent, (3) 48", Super T-8 lamp, Instant Start Ballast, NLO (BF: .85-.95) Prismatic Acrylic Diffuser	16	36	Recessed Flanged T8 LED Retrofit Lamp with External Driver LED 4' T8 Lamp (3) 12W Lamps			5824	1.04	0.57	6,055	3,321	-	GE 34235 LEDT8/LC/G/4/840	GE 21379 LED/DR/D4L/LW	-
835	Education Building	Ice Cream Shop 3.110	6	65	2'x4' Troffer Recessed Fluorescent, (3) 48", Super T-8 lamp, Instant Start Ballast, NLO (BF: .85-.95) Prismatic Acrylic Diffuser	6	26	Recessed 2'x4' Troffer LED Light Fixture. (1) 26W			1560	0.39	0.15	608	241	GE LPL24B04XMM840VQLTW	-	-	-
836	Education Building	Gymnasium 3.101	28	413	High-Bay Surface Mounted Metal Halide, (1) 400W lamp Flat Glass Lens	28	125	Surface Mounted High-Bay LED Light Fixture. (1) 126W - HIGH			5824	11.57	3.49	67,405	20,342	RAB BAYLED104NW	-	-	-
837	Education Building	Gymnasium 3.101	4	3	Universal Face Exit Sign; Black Surface Mounted EXIT C172Light Emitting Diode, (2) 1.5W lamp, Dual Sided (No Diffuser)	4	3	Existing luminaire to remain as is No Retrofit. To remain as is.			8760	0.01	0.01	99	99	-	-	-	-
838	Education Building	Gymnasium 3.101	2	65	2'x4' Troffer Recessed Fluorescent, (3) 48", Super T-8 lamp, Instant Start Ballast, NLO (BF: .85-.95) Prismatic Acrylic Diffuser	2	26	Recessed 2'x4' Troffer LED Light Fixture. (1) 26W			5824	0.13	0.05	757	300	GE LPL24B04XMM840VQLTW	-	-	-
839	Education Building	Staff Restroom 10.905	2	43	4' Wraparound; Tamper-Proof Surface Mounted Fluorescent, (2) 48", Super T-8 lamp, Instant Start Ballast, NLO (BF: .85-.95) Prismatic Acrylic Diffuser	2	24	Surface Mounted T8 LED Retrofit Lamp with External Driver LED 4' T8 Lamp (2) 12W Lamps			1456	0.09	0.05	126	69	-	GE 34235 LEDT8/LC/G/4/840	GE 21378 LED/DR/D2L/LW	-
840	Education Building	Staff Restroom 10.905	1	30	2' Wraparound; Tamper-Proof Surface Mounted Fluorescent, (2) 24", T-8 lamp, Instant Start Ballast, NLO (BF: .85-.95) Prismatic Acrylic Diffuser	1	16	Surface Mounted T8 LED Retrofit Lamp with External Driver LED 2' T8 Lamp (2) 8W Lamps			1456	0.03	0.02	43	23	-	GE 36409 LEDT8/LC/G/2/840	GE 21378 LED/DR/D2L/LW	-
841	Education Building	Laundry Closet	1	43	4' Wraparound; Tamper-Proof Surface Mounted Fluorescent, (2) 48", Super T-8 lamp, Instant Start Ballast, NLO (BF: .85-.95) Prismatic Acrylic Diffuser	1	24	Surface Mounted T8 LED Retrofit Lamp with External Driver LED 4' T8 Lamp (2) 12W Lamps			1560	0.04	0.02	68	37	-	GE 34235 LEDT8/LC/G/4/840	GE 21378 LED/DR/D2L/LW	-
842	Education Building	Custodial Equipment 10.907	4	43	4' Wraparound; Tamper-Proof Surface Mounted Fluorescent, (2) 48", Super T-8 lamp, Instant Start Ballast, NLO (BF: .85-.95) Prismatic Acrylic Diffuser	4	24	Surface Mounted T8 LED Retrofit Lamp with External Driver LED 4' T8 Lamp (2) 12W Lamps			1560	0.17	0.10	270	148	-	GE 34235 LEDT8/LC/G/4/840	GE 21378 LED/DR/D2L/LW	-
843	Education Building	Custodial Equipment 10.907	2	30	2' Wraparound; Tamper-Proof Surface Mounted Fluorescent, (2) 24", T-8 lamp, Instant Start Ballast, NLO (BF: .85-.95) Prismatic Acrylic Diffuser	2	16	Surface Mounted T8 LED Retrofit Lamp with External Driver LED 2' T8 Lamp (2) 8W Lamps			1560	0.06	0.03	93	49	-	GE 36409 LEDT8/LC/G/2/840	GE 21378 LED/DR/D2L/LW	-
844	Education Building	Inmate Restroom	1	43	4' Wraparound; Tamper-Proof Surface Mounted Fluorescent, (2) 48", Super T-8 lamp, Instant Start Ballast, NLO (BF: .85-.95) Prismatic Acrylic Diffuser	1	24	Surface Mounted T8 LED Retrofit Lamp with External Driver LED 4' T8 Lamp (2) 12W Lamps			1456	0.04	0.02	63	35	-	GE 34235 LEDT8/LC/G/4/840	GE 21378 LED/DR/D2L/LW	-
845	Education Building	Laundry Closet	1	43	4' Wraparound; Tamper-Proof Surface Mounted Fluorescent, (2) 48", Super T-8 lamp, Instant Start Ballast, NLO (BF: .85-.95) Prismatic Acrylic Diffuser	1	24	Surface Mounted T8 LED Retrofit Lamp with External Driver LED 4' T8 Lamp (2) 12W Lamps			1560	0.04	0.02	68	37	-	GE 34235 LEDT8/LC/G/4/840	GE 21378 LED/DR/D2L/LW	-
846	Education Building	EquipmentCloset	1	43	4' Wraparound; Tamper-Proof Surface Mounted Fluorescent, (2) 48", Super T-8 lamp, Instant Start Ballast, NLO (BF: .85-.95) Prismatic Acrylic Diffuser	1	24	Surface Mounted T8 LED Retrofit Lamp with External Driver LED 4' T8 Lamp (2) 12W Lamps			1560	0.04	0.02	68	37	-	GE 34235 LEDT8/LC/G/4/840	GE 21378 LED/DR/D2L/LW	-
847	Field House	Open Equipment Room	8	43	4' Wraparound; Tamper-Proof Surface Mounted Fluorescent, (2) 48", Super T-8 lamp, Instant Start Ballast, NLO (BF: .85-.95) Prismatic Acrylic Diffuser	8	24	Surface Mounted T8 LED Retrofit Lamp with External Driver LED 4' T8 Lamp (2) 12W Lamps			1560	0.35	0.19	541	297	-	GE 34235 LEDT8/LC/G/4/840	GE 21378 LED/DR/D2L/LW	-
848	Field House	Open Equipment Room	1	30	2' Wraparound; Tamper-Proof Surface Mounted Fluorescent, (2) 24", T-8 lamp, Instant Start Ballast, NLO (BF: .85-.95) Prismatic Acrylic Diffuser	1	16	Surface Mounted T8 LED Retrofit Lamp with External Driver LED 2' T8 Lamp (2) 8W Lamps			1560	0.03	0.02	46	25	-	GE 36409 LEDT8/LC/G/2/840	GE 21378 LED/DR/D2L/LW	-
849	Field House	Open Equipment Room	2	19	Universal Face Exit Sign; Black Surface Mounted Compact Fluorescent, twin, (2) 7W lamp (No Diffuser)	2	2	Surface Mounted Upgrade EXIT Sign LED Light Fixture. (1) 2W			8760	0.04	0.00	332	35	-	TCP 20716 RD LED PADDLE RETRO HARDWIRE	-	-
850	Field House	Staff Restroom	1	43	4' Wraparound; Tamper-Proof Surface Mounted Fluorescent, (2) 48", Super T-8 lamp, Instant Start Ballast, NLO (BF: .85-.95) Prismatic Acrylic Diffuser	1	24	Surface Mounted T8 LED Retrofit Lamp with External Driver LED 4' T8 Lamp (2) 12W Lamps			1456	0.04	0.02	63	35	-	GE 34235 LEDT8/LC/G/4/840	GE 21378 LED/DR/D2L/LW	-
851	Field House	Exterior Inmate Restroom	1	43	4' Wraparound; Tamper-Proof Surface Mounted Fluorescent, (2) 48", Super T-8 lamp, Instant Start Ballast, NLO (BF: .85-.95) Prismatic Acrylic Diffuser	1	24	Surface Mounted T8 LED Retrofit Lamp with External Driver LED 4' T8 Lamp (2) 12W Lamps			1456	0.04	0.02	63	35	-	GE 34235 LEDT8/LC/G/4/840	GE 21378 LED/DR/D2L/LW	-
852	Field House	Exterior Inmate Restroom	1	43	4' Wraparound; Tamper-Proof Surface Mounted Fluorescent, (2) 48", Super T-8 lamp, Instant Start Ballast, NLO (BF: .85-.95) Prismatic Acrylic Diffuser	1	24	Surface Mounted T8 LED Retrofit Lamp with External Driver LED 4' T8 Lamp (2) 12W Lamps			1456	0.04	0.02	63	35	-	GE 34235 LEDT8/LC/G/4/840	GE 21378 LED/DR/D2L/LW	-
853	Main Support Building	Main Control Vestibule	1	43	2'x4' Troffer Recessed Flanged Fluorescent, (2) 48", Super T-8 lamp, Instant Start Ballast, NLO (BF: .85-.95) Prismatic Acrylic Diffuser	1	24	Recessed Flanged T8 LED Retrofit Lamp with External Driver LED 4' T8 Lamp (2) 12W Lamps			200	0.04	0.02	9	5	-	GE 34235 LEDT8/LC/G/4/840	GE 21378 LED/DR/D2L/LW	-
854	Main Support Building	Main Control	7	65	2'x4' Dimmable Recessed Troffer Recessed Fluorescent, (3) 48", Super T-8 lamp, Instant Start Ballast, NLO (BF: .85-.95) Deep Cell Parabolic Diffuser	7	26	Recessed 2'x4' Troffer LED Light Fixture. (1) 26W			3640	0.45	0.18	1,656	656	GE LPL24B04XMM840VQLTW	-	-	-
855	Main Support Building	Main Control	2	43	2'x4' Dimmable Recessed Troffer Recessed Fluorescent, (2) 48", Super T-8 lamp, Instant Start Ballast, NLO (BF: .85-.95) Deep Cell Parabolic Diffuser	2	26	Recessed 2'x4' Troffer LED Light Fixture. (1) 26W			3640	0.09	0.05	315	187	GE LPL24B04XMM840VQLTW	-	-	-
856	Main Support Building	Staff Restroom	1	43	4' Wraparound; Tamper-Proof Surface Mounted Fluorescent, (2) 48", Super T-8 lamp, Instant Start Ballast, NLO (BF: .85-.95) Prismatic Acrylic Diffuser	1	24	Surface Mounted T8 LED Retrofit Lamp with External Driver LED 4' T8 Lamp (2) 12W Lamps			1456	0.04	0.02	63	35	-	GE 34235 LEDT8/LC/G/4/840	GE 21378 LED/DR/D2L/LW	-
857	Main Support Building	Data Closet	1	43	4' Wraparound; Tamper-Proof Surface Mounted Fluorescent, (2) 48", Super T-8 lamp, Instant Start Ballast, NLO (BF: .85-.95) Prismatic Acrylic Diffuser	1	24	Surface Mounted T8 LED Retrofit Lamp with External Driver LED 4' T8 Lamp (2) 12W Lamps			520	0.04	0.02	23	12	-	GE 34235 LEDT8/LC/G/4/840	GE 21378 LED/DR/D2L/LW	-

Line #	Facility Area	Space	Pre Fixture Qty	Pre Watts/ Fixt	Pre Description	Post Fixture Qty	Post Watt/ Fixt	Post Description	Wallswitch Sensor	Ceiling Sensor	Hours of Operation	Base kW	Proposed kW	Base kWh	Proposed kWh	Luminaire Part #	Lamp Part #	Driver Part#	Misc. Parts
858	Main Support Building	CCtv Room	1	65	2'x4' Dimmable Recessed Troffer Recessed Fluorescent, (3) 48", Super T-8 lamp, Instant Start Ballast, NLO (BF: .85-.95) Deep Cell Parabolic Diffuser	1	26	Recessed 2'x4' Troffer LED Light Fixture. (1) 26W			200	0.06	0.03	13	5	GE LPL24B04XMM840VQLTW	-	-	-
859	Main Support Building	Data Closet	1	43	4' Wraparound; Tamper-Proof Surface Mounted Fluorescent, (2) 48", Super T-8 lamp, Instant Start Ballast, NLO (BF: .85-.95) Prismatic Acrylic Diffuser	1	24	Surface Mounted T8 LED Retrofit Lamp with External Driver LED 4' T8 Lamp (2) 12W Lamps			520	0.04	0.02	23	12	-	GE 34235 LEDT8/LC/G/4/840	GE 21378 LED/DR/D2L/LW	-
860	Main Support Building	Shift Commanders Office	2	65	2'x4' Troffer Recessed Fluorescent, (3) 48", Super T-8 lamp, Instant Start Ballast, NLO (BF: .85-.95) Deep Cell Parabolic Diffuser	2	26	Recessed 2'x4' Troffer LED Light Fixture. (1) 26W			3640	0.13	0.05	473	187	GE LPL24B04XMM840VQLTW	-	-	-
861	Main Support Building	Control Sally Port	5	43	2'x4' Troffer Recessed Fluorescent, (2) 48", Super T-8 lamp, Instant Start Ballast, NLO (BF: .85-.95) Prismatic Acrylic Diffuser	5	26	Recessed 2'x4' Troffer LED Light Fixture. (1) 26W			8760	0.22	0.13	1,897	1,127	GE LPL24B04XMM840VQLTW	-	-	-
862	Main Support Building	Control Sally Port	1	19	Universal Face Exit Sign; White Surface Mounted Compact Fluorescent, twin, (2) 7W lamp (No Diffuser)	1	3	Surface Mounted Universal Face Exit Sign; White LED Light Fixture. (1) 3W			8760	0.02	0.00	166	26	TCP 22743 RD LED EXIT BBU WH HOUSING	-	-	-
863	Main Support Building	L5 Corridor (to non contact visit)	9	43	2'x4' Troffer Recessed Fluorescent, (2) 48", Super T-8 lamp, Instant Start Ballast, NLO (BF: .85-.95) Prismatic Acrylic Diffuser	9	26	Recessed 2'x4' Troffer LED Light Fixture. (1) 26W			6570	0.39	0.23	2,562	1,522	GE LPL24B04XMM840VQLTW	-	-	-
864	Main Support Building	L5 Corridor (to non contact visit)	1	3	Universal Face Exit Sign; White Surface Mounted EXIT C172Light Emitting Diode, (2) 1.5W lamp, Dual Sided (No Diffuser)	1	3	Existing luminaire to remain as is No Retrofit. To remain as is.			8760	0.00	0.00	25	25	-	-	-	-
865	Main Support Building	Non Contact Visit Corridor	20	43	4' Wraparound; Tamper-Proof Surface Mounted Fluorescent, (2) 48", Super T-8 lamp, Instant Start Ballast, NLO (BF: .85-.95) Prismatic Acrylic Diffuser	20	24	Surface Mounted T8 LED Retrofit Lamp with External Driver LED 4' T8 Lamp (2) 12W Lamps			6570	0.87	0.48	5,692	3,122	-	GE 34235 LEDT8/LC/G/4/840	GE 21378 LED/DR/D2L/LW	-
866	Main Support Building	Non Contact Visit Corridor	2	19	Universal Face Exit Sign; Black Surface Mounted Compact Fluorescent, twin, (2) 7W lamp (No Diffuser)	2	2	Surface Mounted Upgrade EXIT Sign LED Light Fixture. (1) 2W			8760	0.04	0.00	332	35	-	TCP 20716 RD LED PADDLE RETRO HARDWIRE	-	-
867	Main Support Building	Propert Storage H.314	2	43	4' Wraparound; Tamper-Proof Surface Mounted Fluorescent, (2) 48", Super T-8 lamp, Instant Start Ballast, NLO (BF: .85-.95) Prismatic Acrylic Diffuser	2	24	Surface Mounted T8 LED Retrofit Lamp with External Driver LED 4' T8 Lamp (2) 12W Lamps			1560	0.09	0.05	135	74	-	GE 34235 LEDT8/LC/G/4/840	GE 21378 LED/DR/D2L/LW	-
868	Main Support Building	Inmate Restroom H.312	1	43	4' Wraparound; Tamper-Proof Surface Mounted Fluorescent, (2) 48", Super T-8 lamp, Instant Start Ballast, NLO (BF: .85-.95) Prismatic Acrylic Diffuser	1	24	Surface Mounted T8 LED Retrofit Lamp with External Driver LED 4' T8 Lamp (2) 12W Lamps			1456	0.04	0.02	63	35	-	GE 34235 LEDT8/LC/G/4/840	GE 21378 LED/DR/D2L/LW	-
869	Main Support Building	PRC Office H.306	4	87	4' Wraparound; Tamper-Proof Surface Mounted Fluorescent, (4) 48", Super T-8 lamp, Instant Start Ballast, NLO (BF: .85-.95) Prismatic Acrylic Diffuser	4	48	Surface Mounted T8 LED Retrofit Lamp with External Driver LED 4' T8 Lamp (4) 12W Lamps			3640	0.35	0.19	1,261	692	-	GE 34235 LEDT8/LC/G/4/840	GE 21379 LED/DR/D4L/LW	-
870	Main Support Building	Non Contact Visit 1-5	10	43	4' Wraparound; Tamper-Proof Surface Mounted Fluorescent, (2) 48", Super T-8 lamp, Instant Start Ballast, NLO (BF: .85-.95) Prismatic Acrylic Diffuser	10	24	Surface Mounted T8 LED Retrofit Lamp with External Driver LED 4' T8 Lamp (2) 12W Lamps			8760	0.43	0.24	3,795	2,081	-	GE 34235 LEDT8/LC/G/4/840	GE 21378 LED/DR/D2L/LW	-
871	Main Support Building	First Responder Equipment Room H.305	2	87	4' Wraparound; Tamper-Proof Surface Mounted Fluorescent, (4) 48", Super T-8 lamp, Instant Start Ballast, NLO (BF: .85-.95) Prismatic Acrylic Diffuser	2	48	Surface Mounted T8 LED Retrofit Lamp with External Driver LED 4' T8 Lamp (4) 12W Lamps			1560	0.17	0.10	270	148	-	GE 34235 LEDT8/LC/G/4/840	GE 21379 LED/DR/D4L/LW	-
872	Main Support Building	Mens Visit Restroom H.304	1	43	4' Wraparound; Tamper-Proof Surface Mounted Fluorescent, (2) 48", Super T-8 lamp, Instant Start Ballast, NLO (BF: .85-.95) Prismatic Acrylic Diffuser	1	24	Surface Mounted T8 LED Retrofit Lamp with External Driver LED 4' T8 Lamp (2) 12W Lamps	1		1092	0.04	0.02	63	35	-	GE 34235 LEDT8/LC/G/4/840	GE 21378 LED/DR/D2L/LW	-
873	Main Support Building	Womens Visit Restroom H.303	1	43	4' Wraparound; Tamper-Proof Surface Mounted Fluorescent, (2) 48", Super T-8 lamp, Instant Start Ballast, NLO (BF: .85-.95) Prismatic Acrylic Diffuser	1	24	Surface Mounted T8 LED Retrofit Lamp with External Driver LED 4' T8 Lamp (2) 12W Lamps	1		1092	0.04	0.02	63	35	-	GE 34235 LEDT8/LC/G/4/840	GE 21378 LED/DR/D2L/LW	-
874	Main Support Building	Visitation Open Area	54	43	2'x4' Troffer Recessed Fluorescent, (2) 48", Super T-8 lamp, Instant Start Ballast, NLO (BF: .85-.95) Prismatic Acrylic Diffuser	54	26	Recessed 2'x4' Troffer LED Light Fixture. (1) 26W			3640	2.34	1.39	8,515	5,059	GE LPL24B04XMM840VQLTW	-	-	-
875	Main Support Building	Visitation Open Area	4	65	2'x4' Troffer Recessed Fluorescent, (3) 48", Super T-8 lamp, Instant Start Ballast, NLO (BF: .85-.95) Prismatic Acrylic Diffuser	4	26	Recessed 2'x4' Troffer LED Light Fixture. (1) 26W			3640	0.26	0.10	946	375	GE LPL24B04XMM840VQLTW	-	-	-
876	Main Support Building	Visitation Open Area	1	19	Universal Face Exit Sign; White Surface Mounted Compact Fluorescent, twin, (2) 7W lamp (No Diffuser)	1	3	Surface Mounted Universal Face Exit Sign; White LED Light Fixture. (1) 3W			8760	0.02	0.00	166	26	TCP 22743 RD LED EXIT BBU WH HOUSING	-	-	-
877	Main Support Building	Visitation Open Area	1	3	Universal Face Exit Sign; White Surface Mounted EXIT C172Light Emitting Diode, (2) 1.5W lamp, Dual Sided (No Diffuser)	1	3	Existing luminaire to remain as is No Retrofit. To remain as is.			8760	0.00	0.00	25	25	-	-	-	-
878	Main Support Building	Mens Visit Restroom H2.512	1	43	4' Wraparound; Tamper-Proof Surface Mounted Fluorescent, (2) 48", Super T-8 lamp, Instant Start Ballast, NLO (BF: .85-.95) Prismatic Acrylic Diffuser	1	24	Surface Mounted T8 LED Retrofit Lamp with External Driver LED 4' T8 Lamp (2) 12W Lamps	1		1092	0.04	0.02	63	35	-	GE 34235 LEDT8/LC/G/4/840	GE 21378 LED/DR/D2L/LW	-
879	Main Support Building	Womens Visit Restroom H2.514	1	43	4' Wraparound; Tamper-Proof Surface Mounted Fluorescent, (2) 48", Super T-8 lamp, Instant Start Ballast, NLO (BF: .85-.95) Prismatic Acrylic Diffuser	1	24	Surface Mounted T8 LED Retrofit Lamp with External Driver LED 4' T8 Lamp (2) 12W Lamps	1		1092	0.04	0.02	63	35	-	GE 34235 LEDT8/LC/G/4/840	GE 21378 LED/DR/D2L/LW	-
880	Main Support Building	Small Private Visit	2	43	2'x4' Troffer Recessed Fluorescent, (2) 48", Super T-8 lamp, Instant Start Ballast, NLO (BF: .85-.95) Prismatic Acrylic Diffuser	2	26	Recessed 2'x4' Troffer LED Light Fixture. (1) 26W			3640	0.09	0.05	315	187	GE LPL24B04XMM840VQLTW	-	-	-
881	Main Support Building	Small Private Visit	1	43	4' Wraparound; Tamper-Proof Surface Mounted Fluorescent, (2) 48", Super T-8 lamp, Instant Start Ballast, NLO (BF: .85-.95) Prismatic Acrylic Diffuser	1	24	Surface Mounted T8 LED Retrofit Lamp with External Driver LED 4' T8 Lamp (2) 12W Lamps			1560	0.04	0.02	68	37	-	GE 34235 LEDT8/LC/G/4/840	GE 21378 LED/DR/D2L/LW	-
882	Main Support Building	Childrens Area Visit	8	65	2'x4' Troffer Recessed Fluorescent, (3) 48", Super T-8 lamp, Instant Start Ballast, NLO (BF: .85-.95) Prismatic Acrylic Diffuser	8	26	Recessed 2'x4' Troffer LED Light Fixture. (1) 26W			3640	0.52	0.21	1,892	750	GE LPL24B04XMM840VQLTW	-	-	-
883	Main Support Building	Official Visit 2.505	3	65	2'x4' Troffer Recessed Fluorescent, (3) 48", Super T-8 lamp, Instant Start Ballast, NLO (BF: .85-.95) Prismatic Acrylic Diffuser	3	26	Recessed 2'x4' Troffer LED Light Fixture. (1) 26W			3640	0.19	0.08	710	281	GE LPL24B04XMM840VQLTW	-	-	-
884	Main Support Building	Official Visit 2.504	3	65	2'x4' Troffer Recessed Fluorescent, (3) 48", Super T-8 lamp, Instant Start Ballast, NLO (BF: .85-.95) Prismatic Acrylic Diffuser	3	26	Recessed 2'x4' Troffer LED Light Fixture. (1) 26W			3640	0.19	0.08	710	281	GE LPL24B04XMM840VQLTW	-	-	-
885	Main Support Building	Visit Room 2	2	43	4' Wraparound; Tamper-Proof Surface Mounted Fluorescent, (2) 48", Super T-8 lamp, Instant Start Ballast, NLO (BF: .85-.95) Prismatic Acrylic Diffuser	2	24	Surface Mounted T8 LED Retrofit Lamp with External Driver LED 4' T8 Lamp (2) 12W Lamps			3640	0.09	0.05	315	173	-	GE 34235 LEDT8/LC/G/4/840	GE 21378 LED/DR/D2L/LW	-
886	Main Support Building	Visit Room 1	2	43	4' Wraparound; Tamper-Proof Surface Mounted Fluorescent, (2) 48", Super T-8 lamp, Instant Start Ballast, NLO (BF: .85-.95) Prismatic Acrylic Diffuser	2	24	Surface Mounted T8 LED Retrofit Lamp with External Driver LED 4' T8 Lamp (2) 12W Lamps			3640	0.09	0.05	315	173	-	GE 34235 LEDT8/LC/G/4/840	GE 21378 LED/DR/D2L/LW	-
887	Main Support Building	Custodial Room	1	43	2'x4' Troffer Recessed Fluorescent, (2) 48", Super T-8 lamp, Instant Start Ballast, NLO (BF: .85-.95) Prismatic Acrylic Diffuser	1	26	Recessed 2'x4' Troffer LED Light Fixture. (1) 26W			1560	0.04	0.03	68	40	GE LPL24B04XMM840VQLTW	-	-	-
888	Main Support Building	Parole Hearing Room	6	65	2'x4' Troffer Recessed Fluorescent, (3) 48", Super T-8 lamp, Instant Start Ballast, NLO (BF: .85-.95) Prismatic Acrylic Diffuser	6	26	Recessed 2'x4' Troffer LED Light Fixture. (1) 26W			3640	0.39	0.15	1,419	562	GE LPL24B04XMM840VQLTW	-	-	-
889	Main Support Building	Staff Restroom	1	43	4' Wraparound; Tamper-Proof Surface Mounted Fluorescent, (2) 48", Super T-8 lamp, Instant Start Ballast, NLO (BF: .85-.95) Prismatic Acrylic Diffuser	1	24	Surface Mounted T8 LED Retrofit Lamp with External Driver LED 4' T8 Lamp (2) 12W Lamps	1		1092	0.04	0.02	63	35	-	GE 34235 LEDT8/LC/G/4/840	GE 21378 LED/DR/D2L/LW	-
890	Main Support Building	Inmate Visit Strip	13	65	2'x4' Troffer Recessed Fluorescent, (3) 48", Super T-8 lamp, Instant Start Ballast, NLO (BF: .85-.95) Prismatic Acrylic Diffuser	13	26	Recessed 2'x4' Troffer LED Light Fixture. (1) 26W			3640	0.84	0.33	3,075	1,218	GE LPL24B04XMM840VQLTW	-	-	-
891	Main Support Building	Inmate Visit Strip	3	43	2'x4' Troffer Recessed Fluorescent, (2) 48", Super T-8 lamp, Instant Start Ballast, NLO (BF: .85-.95) Prismatic Acrylic Diffuser	3	26	Recessed 2'x4' Troffer LED Light Fixture. (1) 26W			3640	0.13	0.08	473	281	GE LPL24B04XMM840VQLTW	-	-	-
892	Main Support Building	Inmate Visit Strip	1	43	4' Wraparound; Tamper-Proof Surface Mounted Fluorescent, (2) 48", Super T-8 lamp, Instant Start Ballast, NLO (BF: .85-.95) Prismatic Acrylic Diffuser	1	24	Surface Mounted T8 LED Retrofit Lamp with External Driver LED 4' T8 Lamp (2) 12W Lamps			3640	0.04	0.02	158	86	-	GE 34235 LEDT8/LC/G/4/840	GE 21378 LED/DR/D2L/LW	-
893	Main Support Building	Security Panel Room 2.519	1	43	4' Wraparound; Tamper-Proof Surface Mounted Fluorescent, (2) 48", Super T-8 lamp, Instant Start Ballast, NLO (BF: .85-.95) Prismatic Acrylic Diffuser	1	24	Surface Mounted T8 LED Retrofit Lamp with External Driver LED 4' T8 Lamp (2) 12W Lamps			520	0.04	0.02	23	12	-	GE 34235 LEDT8/LC/G/4/840	GE 21378 LED/DR/D2L/LW	-
894	Main Support Building	Search Room 2.509	2	43	4' Wraparound; Tamper-Proof Surface Mounted Fluorescent, (2) 48", Super T-8 lamp, Instant Start Ballast, NLO (BF: .85-.95) Prismatic Acrylic Diffuser	2	24	Surface Mounted T8 LED Retrofit Lamp with External Driver LED 4' T8 Lamp (2) 12W Lamps			3640	0.09	0.05	315	173	-	GE 34235 LEDT8/LC/G/4/840	GE 21378 LED/DR/D2L/LW	-
895	Main Support Building	Security Office	5	65	2'x4' Troffer Recessed Fluorescent, (3) 48", Super T-8 lamp, Instant Start Ballast, NLO (BF: .85-.95) Prismatic Acrylic Diffuser	5	26	Recessed 2'x4' Troffer LED Light Fixture. (1) 26W			3640	0.32	0.13	1,183	468	GE LPL24B04XMM840VQLTW	-	-	-
896	Main Support Building	Office	1	65	2'x4' Troffer Recessed Fluorescent, (3) 48", Super T-8 lamp, Instant Start Ballast, NLO (BF: .85-.95) Prismatic Acrylic Diffuser	1	26	Recessed 2'x4' Troffer LED Light Fixture. (1) 26W	1		2730	0.06	0.03	237	94	GE LPL24B04XMM840VQLTW	-	-	-

Line #	Facility Area	Space	Pre Fixture Qty	Pre Watts/ Fixt	Pre Description	Post Fixture Qty	Post Watt/ Fixt	Post Description	Wallswitch Sensor	Ceiling Sensor	Hours of Operation	Base kW	Proposed kW	Base kWh	Proposed kWh	Luminaire Part #	Lamp Part #	Driver Part#	Misc. Parts
897	Main Support Building	Security Office 2.511	7	65	2'x4' Troffer Recessed Fluorescent, (3) 48", Super T-8 lamp, Instant Start Ballast, NLO (BF: .85-.95) Prismatic Acrylic Diffuser	7	26	Recessed 2'x4' Troffer LED Light Fixture. (1) 26W			3640	0.45	0.18	1,656	656	GE LPL24B04XMM840VQLTW	-	-	-
898	Main Support Building	Security Office 2.511	1	19	Universal Face Exit Sign; White Surface Mounted Compact Fluorescent, twin, (2) 7W lamp (No Diffuser)	1	3	Surface Mounted Universal Face Exit Sign; White LED Light Fixture. (1) 3W			8760	0.02	0.00	166	26	TCP 22743 RD LED EXIT BBU WH HOUSING	-	-	-
899	Main Support Building	Security Office 2.511	1	3	Universal Face Exit Sign; White Surface Mounted EXIT C172Light Emitting Diode, (2) 1.5W lamp, Dual Sided (No Diffuser)	1	3	Existing luminaire to remain as is No Retrofit. To remain as is.			8760	0.00	0.00	25	25	-	-	-	-
900	Main Support Building	Evidence Room	1	65	2'x4' Troffer Recessed Fluorescent, (3) 48", Super T-8 lamp, Instant Start Ballast, NLO (BF: .85-.95) Prismatic Acrylic Diffuser	1	26	Recessed 2'x4' Troffer LED Light Fixture. (1) 26W			520	0.06	0.03	34	13	GE LPL24B04XMM840VQLTW	-	-	-
901	Main Support Building	Visit Que Vestibule	2	65	2'x4' Troffer Recessed Flanged Fluorescent, (3) 48", Super T-8 lamp, Instant Start Ballast, NLO (BF: .85-.95) Prismatic Acrylic Diffuser	2	36	Recessed Flanged T8 LED Retrofit Lamp with External Driver LED 4' T8 Lamp (3) 12W Lamps			8760	0.13	0.07	1,138	624	-	GE 34235 LEDT8/LC/G/4/840	GE 21379 LED/DR/D4L/LW	-
902	Main Support Building	Inmate Visit Que	4	266	Recessed Can 12" Recessed Metal Halide, (1) 250W lamp Prismatic Acrylic Diffuser	4	59	Recessed 2'x4' Troffer LED Light Fixture. (1) 60W - HIGH			8760	1.06	0.24	9,329	2,081	ELITE 24-FPLA1-LED-7500L-DIM10-MVOLT-40K-85	-	-	-
903	Main Support Building	Deputys Complex Entry	1	43	4' Wraparound; Tamper-Proof Surface Mounted Fluorescent, (2) 48", Super T-8 lamp, Instant Start Ballast, NLO (BF: .85-.95) Prismatic Acrylic Diffuser	1	24	Surface Mounted T8 LED Retrofit Lamp with External Driver LED 4' T8 Lamp (2) 12W Lamps			3640	0.04	0.02	158	86	-	GE 34235 LEDT8/LC/G/4/840	GE 21378 LED/DR/D2L/LW	-
904	Main Support Building	Deputys Complex Entry	1	3	Universal Face Exit Sign; White Surface Mounted EXIT C172Light Emitting Diode, (2) 1.5W lamp, Dual Sided (No Diffuser)	1	3	Existing luminaire to remain as is No Retrofit. To remain as is.			8760	0.00	0.00	25	25	-	-	-	-
905	Main Support Building	Deputys Complex Open Office	11	65	2'x4' Troffer Recessed Fluorescent, (3) 48", Super T-8 lamp, Instant Start Ballast, NLO (BF: .85-.95) Microcell Diffuser	11	26	Recessed 2'x4' Troffer LED Light Fixture. (1) 26W			3640	0.71	0.28	2,602	1,031	GE LPL24B04XMM840VQLTW	-	-	-
906	Main Support Building	Clerk Supervisor 2.114	2	65	2'x4' Troffer Recessed Fluorescent, (3) 48", Super T-8 lamp, Instant Start Ballast, NLO (BF: .85-.95) Prismatic Acrylic Diffuser	2	26	Recessed 2'x4' Troffer LED Light Fixture. (1) 26W			3640	0.13	0.05	473	187	GE LPL24B04XMM840VQLTW	-	-	-
907	Main Support Building	Office 2.105	2	65	2'x4' Troffer Recessed Fluorescent, (3) 48", Super T-8 lamp, Instant Start Ballast, NLO (BF: .85-.95) Prismatic Acrylic Diffuser	2	26	Recessed 2'x4' Troffer LED Light Fixture. (1) 26W	1		2730	0.13	0.05	473	187	GE LPL24B04XMM840VQLTW	-	-	-
908	Main Support Building	Office 2.103	3	65	2'x4' Troffer Recessed Fluorescent, (3) 48", Super T-8 lamp, Instant Start Ballast, NLO (BF: .85-.95) Prismatic Acrylic Diffuser	3	26	Recessed 2'x4' Troffer LED Light Fixture. (1) 26W	1		2730	0.19	0.08	710	281	GE LPL24B04XMM840VQLTW	-	-	-
909	Main Support Building	Office 2.101	3	65	2'x4' Troffer Recessed Fluorescent, (3) 48", Super T-8 lamp, Instant Start Ballast, NLO (BF: .85-.95) Prismatic Acrylic Diffuser	3	26	Recessed 2'x4' Troffer LED Light Fixture. (1) 26W	1		2730	0.19	0.08	710	281	GE LPL24B04XMM840VQLTW	-	-	-
910	Main Support Building	Office 2.106	2	65	2'x4' Troffer Recessed Fluorescent, (3) 48", Super T-8 lamp, Instant Start Ballast, NLO (BF: .85-.95) Prismatic Acrylic Diffuser	2	26	Recessed 2'x4' Troffer LED Light Fixture. (1) 26W	1		2730	0.13	0.05	473	187	GE LPL24B04XMM840VQLTW	-	-	-
911	Main Support Building	Copy Room 2.111	2	65	2'x4' Troffer Recessed Fluorescent, (3) 48", Super T-8 lamp, Instant Start Ballast, NLO (BF: .85-.95) Prismatic Acrylic Diffuser	2	26	Recessed 2'x4' Troffer LED Light Fixture. (1) 26W			3640	0.13	0.05	473	187	GE LPL24B04XMM840VQLTW	-	-	-
912	Main Support Building	Staff Restroom 2.113	1	43	4' Wraparound; Tamper-Proof Surface Mounted Fluorescent, (2) 48", Super T-8 lamp, Instant Start Ballast, NLO (BF: .85-.95) Prismatic Acrylic Diffuser	1	24	Surface Mounted T8 LED Retrofit Lamp with External Driver LED 4' T8 Lamp (2) 12W Lamps	1		1092	0.04	0.02	63	35	-	GE 34235 LEDT8/LC/G/4/840	GE 21378 LED/DR/D2L/LW	-
913	Main Support Building	Custodial Closet 2.112	1	43	4' Wraparound; Tamper-Proof Surface Mounted Fluorescent, (2) 48", Super T-8 lamp, Instant Start Ballast, NLO (BF: .85-.95) Prismatic Acrylic Diffuser	1	24	Surface Mounted T8 LED Retrofit Lamp with External Driver LED 4' T8 Lamp (2) 12W Lamps	1		1170	0.04	0.02	68	37	-	GE 34235 LEDT8/LC/G/4/840	GE 21378 LED/DR/D2L/LW	-
914	Main Support Building	Conference Room	6	65	2'x4' Troffer Recessed Fluorescent, (3) 48", Super T-8 lamp, Instant Start Ballast, NLO (BF: .85-.95) Prismatic Acrylic Diffuser	6	26	Recessed 2'x4' Troffer LED Light Fixture. (1) 26W		1	1170	0.39	0.15	608	241	GE LPL24B04XMM840VQLTW	-	-	-
915	Main Support Building	General Storage 2.115	1	65	2'x4' Troffer Recessed Fluorescent, (3) 48", Super T-8 lamp, Instant Start Ballast, NLO (BF: .85-.95) Microcell Diffuser	1	26	Recessed 2'x4' Troffer LED Light Fixture. (1) 26W			3640	0.06	0.03	237	94	GE LPL24B04XMM840VQLTW	-	-	-
916	Main Support Building	Office 2.522	5	65	2'x4' Troffer Recessed Fluorescent, (3) 48", Super T-8 lamp, Instant Start Ballast, NLO (BF: .85-.95) Prismatic Acrylic Diffuser	5	26	Recessed 2'x4' Troffer LED Light Fixture. (1) 26W			3640	0.32	0.13	1,183	468	GE LPL24B04XMM840VQLTW	-	-	-
917	Main Support Building	Search Team Office	1	43	2'x4' Troffer Recessed Fluorescent, (2) 48", Super T-8 lamp, Instant Start Ballast, NLO (BF: .85-.95) Prismatic Acrylic Diffuser	1	26	Recessed 2'x4' Troffer LED Light Fixture. (1) 26W	1		2730	0.04	0.03	158	94	GE LPL24B04XMM840VQLTW	-	-	-
918	Main Support Building	Search Team Monitor Room	2	65	2'x4' Dimmable Recessed Troffer Recessed Fluorescent, (3) 48", Super T-8 lamp, Instant Start Ballast, NLO (BF: .85-.95) Prismatic Acrylic Diffuser	2	26	Recessed 2'x4' Troffer LED Light Fixture. (1) 26W			3640	0.13	0.05	473	187	GE LPL24B04XMM840VQLTW	-	-	-
919	Main Support Building	Medical Que Sally Port	4	266	2'x2' Troffer Recessed Metal Halide, (1) 250W lamp Prismatic Acrylic Diffuser	4	49	Recessed Chip On Board (COB) Type Screw-in / Bypass Existing Ballast Light Emitting Diode Lamp, Screw-in, (1) 54W lamp			8760	1.06	0.19	9,329	1,703	-	KEYSTONE KT-LED54HID-EX39-840-D	-	-
920	Main Support Building	Medical Que Sally Port	2	87	2'x4' Troffer Recessed Fluorescent, (4) 48", Super T-8 lamp, Instant Start Ballast, NLO (BF: .85-.95) Prismatic Acrylic Diffuser	2	26	Recessed 2'x4' Troffer LED Light Fixture. (1) 26W			8760	0.17	0.05	1,518	451	GE LPL24B04XMM840VQLTW	-	-	-
921	Main Support Building	Medical Que Sally Port	1	19	Universal Face Exit Sign; White Surface Mounted Compact Fluorescent, twin, (2) 7W lamp (No Diffuser)	1	3	Surface Mounted Universal Face Exit Sign; White LED Light Fixture. (1) 3W			8760	0.02	0.00	166	26	TCP 22743 RD LED EXIT BBU WH HOUSING	-	-	-
922	Main Support Building	R&D Corridor	5	43	2'x4' Troffer Recessed Fluorescent, (2) 48", Super T-8 lamp, Instant Start Ballast, NLO (BF: .85-.95) Prismatic Acrylic Diffuser	5	26	Recessed 2'x4' Troffer LED Light Fixture. (1) 26W			8760	0.22	0.13	1,897	1,127	GE LPL24B04XMM840VQLTW	-	-	-
923	Main Support Building	R&D Corridor	1	19	Universal Face Exit Sign; Black Surface Mounted Compact Fluorescent, twin, (2) 7W lamp (No Diffuser)	1	2	Surface Mounted Upgrade EXIT Sign LED Light Fixture. (1) 2W			8760	0.02	0.00	166	17	-	TCP 20716 RD LED PADDLE RETRO HARDWIRE	-	-
924	Main Support Building	R&D Open Area	15	65	2'x4' Troffer Recessed Fluorescent, (3) 48", Super T-8 lamp, Instant Start Ballast, NLO (BF: .85-.95) Prismatic Acrylic Diffuser	15	26	Recessed 2'x4' Troffer LED Light Fixture. (1) 26W			6570	0.97	0.39	6,404	2,537	GE LPL24B04XMM840VQLTW	-	-	-
925	Main Support Building	R&D Open Area	1	19	Universal Face Exit Sign; Black Surface Mounted Compact Fluorescent, twin, (2) 7W lamp (No Diffuser)	1	2	Surface Mounted Upgrade EXIT Sign LED Light Fixture. (1) 2W			8760	0.02	0.00	166	17	-	TCP 20716 RD LED PADDLE RETRO HARDWIRE	-	-
926	Main Support Building	IRC Office Area	2	65	2'x4' Troffer Recessed Fluorescent, (3) 48", Super T-8 lamp, Instant Start Ballast, NLO (BF: .85-.95) Prismatic Acrylic Diffuser	2	26	Recessed 2'x4' Troffer LED Light Fixture. (1) 26W			3640	0.13	0.05	473	187	GE LPL24B04XMM840VQLTW	-	-	-
927	Main Support Building	Medical Dept Office Area	2	65	2'x4' Troffer Recessed Fluorescent, (3) 48", Super T-8 lamp, Instant Start Ballast, NLO (BF: .85-.95) Prismatic Acrylic Diffuser	2	26	Recessed 2'x4' Troffer LED Light Fixture. (1) 26W			3640	0.13	0.05	473	187	GE LPL24B04XMM840VQLTW	-	-	-
928	Main Support Building	R&D Back Sally Port	2	43	2'x4' Troffer Recessed Fluorescent, (2) 48", Super T-8 lamp, Instant Start Ballast, NLO (BF: .85-.95) Prismatic Acrylic Diffuser	2	26	Recessed 2'x4' Troffer LED Light Fixture. (1) 26W			8760	0.09	0.05	759	451	GE LPL24B04XMM840VQLTW	-	-	-
929	Main Support Building	R&D Back Sally Port	1	3	Universal Face Exit Sign; Black Surface Mounted EXIT C172Light Emitting Diode, (2) 1.5W lamp, Dual Sided (No Diffuser)	1	3	Existing luminaire to remain as is No Retrofit. To remain as is.			8760	0.00	0.00	25	25	-	-	-	-
930	Main Support Building	Group Holding 1	2	65	4' Wraparound; Tamper-Proof Surface Mounted Fluorescent, (3) 48", Super T-8 lamp, Instant Start Ballast, NLO (BF: .85-.95) Prismatic Acrylic Diffuser	2	36	Surface Mounted T8 LED Retrofit Lamp with External Driver LED 4' T8 Lamp (3) 12W Lamps			8760	0.13	0.07	1,138	624	-	GE 34235 LEDT8/LC/G/4/840	GE 21379 LED/DR/D4L/LW	-
931	Main Support Building	Group Holding 2	2	65	4' Wraparound; Tamper-Proof Surface Mounted Fluorescent, (3) 48", Super T-8 lamp, Instant Start Ballast, NLO (BF: .85-.95) Prismatic Acrylic Diffuser	2	36	Surface Mounted T8 LED Retrofit Lamp with External Driver LED 4' T8 Lamp (3) 12W Lamps			8760	0.13	0.07	1,138	624	-	GE 34235 LEDT8/LC/G/4/840	GE 21379 LED/DR/D4L/LW	-
932	Main Support Building	Group Holding 3	1	65	4' Wraparound; Tamper-Proof Surface Mounted Fluorescent, (3) 48", Super T-8 lamp, Instant Start Ballast, NLO (BF: .85-.95) Prismatic Acrylic Diffuser	1	36	Surface Mounted T8 LED Retrofit Lamp with External Driver LED 4' T8 Lamp (3) 12W Lamps			8760	0.06	0.04	569	312	-	GE 34235 LEDT8/LC/G/4/840	GE 21379 LED/DR/D4L/LW	-
933	Main Support Building	Group Holding 4	1	65	4' Wraparound; Tamper-Proof Surface Mounted Fluorescent, (3) 48", Super T-8 lamp, Instant Start Ballast, NLO (BF: .85-.95) Prismatic Acrylic Diffuser	1	36	Surface Mounted T8 LED Retrofit Lamp with External Driver LED 4' T8 Lamp (3) 12W Lamps			8760	0.06	0.04	569	312	-	GE 34235 LEDT8/LC/G/4/840	GE 21379 LED/DR/D4L/LW	-
934	Main Support Building	Group Holding 5	1	65	4' Wraparound; Tamper-Proof Surface Mounted Fluorescent, (3) 48", Super T-8 lamp, Instant Start Ballast, NLO (BF: .85-.95) Prismatic Acrylic Diffuser	1	36	Surface Mounted T8 LED Retrofit Lamp with External Driver LED 4' T8 Lamp (3) 12W Lamps			8760	0.06	0.04	569	312	-	GE 34235 LEDT8/LC/G/4/840	GE 21379 LED/DR/D4L/LW	-
935	Main Support Building	Group Holding 6	2	65	4' Wraparound; Tamper-Proof Surface Mounted Fluorescent, (3) 48", Super T-8 lamp, Instant Start Ballast, NLO (BF: .85-.95) Prismatic Acrylic Diffuser	2	36	Surface Mounted T8 LED Retrofit Lamp with External Driver LED 4' T8 Lamp (3) 12W Lamps			8760	0.13	0.07	1,138	624	-	GE 34235 LEDT8/LC/G/4/840	GE 21379 LED/DR/D4L/LW	-

Line #	Facility Area	Space	Pre Fixture Qty	Pre Watts/ Fixt	Pre Description	Post Fixture Qty	Post Watt/ Fixt	Post Description	Wallswitch Sensor	Ceiling Sensor	Hours of Operation	Base kW	Proposed kW	Base kWh	Proposed kWh	Luminaire Part #	Lamp Part #	Driver Part#	Misc. Parts
936	Main Support Building	Office Area	2	65	2'x4' Troffer Recessed Fluorescent, (3) 48", Super T-8 lamp, Instant Start Ballast, NLO (BF: .85-.95) Prismatic Acrylic Diffuser	2	26	Recessed 2'x4' Troffer LED Light Fixture. (1) 26W			1560	0.13	0.05	203	80	GE LPL24B04XMM840VQLTW	-	-	-
937	Main Support Building	Finger Printing	2	87	2'x4' Troffer Recessed Fluorescent, (4) 48", Super T-8 lamp, Instant Start Ballast, NLO (BF: .85-.95) Prismatic Acrylic Diffuser	2	26	Recessed 2'x4' Troffer LED Light Fixture. (1) 26W			8760	0.17	0.05	1,518	451	GE LPL24B04XMM840VQLTW	-	-	-
938	Main Support Building	Finger Printing	1	87	2'x4' Troffer Surface Mounted Fluorescent, (4) 48", Super T-8 lamp, Instant Start Ballast, NLO (BF: .85-.95) Prismatic Acrylic Diffuser	1	48	Surface Mounted T8 LED Retrofit Lamp with External Driver LED 4' T8 Lamp (4) 12W Lamps			8760	0.09	0.05	759	416	-	GE 34235 LEDT8/LC/G/4/840	GE 21379 LED/DR/D4L/LW	-
939	Main Support Building	Finger Printing	2	60	3' Corner Mount Wall Vanity; Tamper-Proof Wall Mounted Fluorescent, (3) 36", T-8 lamp, Instant Start Ballast, NLO (BF: .85-.95) Prismatic Acrylic Diffuser	2	36	Wall Mounted T8 LED Retrofit Lamp with External Driver LED 3' T8 Lamp (3) 12W Lamps			8760	0.12	0.07	1,059	624	-	GE 36398 GE LEDT8/LC/G/3/840	GE 21379 LED/DR/D4L/LW	-
940	Main Support Building	Security Room 2.310	2	43	4' Wraparound; Tamper-Proof Surface Mounted Fluorescent, (2) 48", Super T-8 lamp, Instant Start Ballast, NLO (BF: .85-.95) Prismatic Acrylic Diffuser	2	24	Surface Mounted T8 LED Retrofit Lamp with External Driver LED 4' T8 Lamp (2) 12W Lamps			1560	0.09	0.05	135	74	-	GE 34235 LEDT8/LC/G/4/840	GE 21378 LED/DR/D2L/LW	-
941	Main Support Building	Office 2.311	2	65	2'x4' Troffer Recessed Fluorescent, (3) 48", Super T-8 lamp, Instant Start Ballast, NLO (BF: .85-.95) Prismatic Acrylic Diffuser	2	26	Recessed 2'x4' Troffer LED Light Fixture. (1) 26W			3640	0.13	0.05	473	187	GE LPL24B04XMM840VQLTW	-	-	-
942	Main Support Building	Inmate Restroom	1	43	4' Wraparound; Tamper-Proof Surface Mounted Fluorescent, (2) 48", Super T-8 lamp, Instant Start Ballast, NLO (BF: .85-.95) Prismatic Acrylic Diffuser	1	24	Surface Mounted T8 LED Retrofit Lamp with External Driver LED 4' T8 Lamp (2) 12W Lamps	1		1092	0.04	0.02	63	35	-	GE 34235 LEDT8/LC/G/4/840	GE 21378 LED/DR/D2L/LW	-
943	Main Support Building	Inmate Shower (storage room)	1	43	4' Wraparound; Tamper-Proof Surface Mounted Fluorescent, (2) 48", Super T-8 lamp, Instant Start Ballast, NLO (BF: .85-.95) Prismatic Acrylic Diffuser	1	46	Surface Mounted 4' Wraparound; Tamper-Proof LED Light Fixture. (1) 46W	1		390	0.04	0.05	23	24	COOPER FAILSAFE FVS8P-4-LD4-2LO-40-UNV-P125-EDC1-WL	-	-	-
944	Main Support Building	Staff Restroom	1	43	4' Wraparound; Tamper-Proof Surface Mounted Fluorescent, (2) 48", Super T-8 lamp, Instant Start Ballast, NLO (BF: .85-.95) Prismatic Acrylic Diffuser	1	24	Surface Mounted T8 LED Retrofit Lamp with External Driver LED 4' T8 Lamp (2) 12W Lamps	1		1092	0.04	0.02	63	35	-	GE 34235 LEDT8/LC/G/4/840	GE 21378 LED/DR/D2L/LW	-
945	Main Support Building	Custodial Room	1	43	4' Wraparound; Tamper-Proof Surface Mounted Fluorescent, (2) 48", Super T-8 lamp, Instant Start Ballast, NLO (BF: .85-.95) Prismatic Acrylic Diffuser	1	24	Surface Mounted T8 LED Retrofit Lamp with External Driver LED 4' T8 Lamp (2) 12W Lamps	1		1170	0.04	0.02	68	37	-	GE 34235 LEDT8/LC/G/4/840	GE 21378 LED/DR/D2L/LW	-
946	Main Support Building	R&D Property Warehouse	16	43	4' Wraparound; Tamper-Proof Chain Mounted Fluorescent, (2) 48", Super T-8 lamp, Instant Start Ballast, NLO (BF: .85-.95) Prismatic Acrylic Diffuser	16	24	Chain Mounted T8 LED Retrofit Lamp with External Driver LED 4' T8 Lamp (2) 12W Lamps			8760	0.69	0.38	6,072	3,330	-	GE 34235 LEDT8/LC/G/4/840	GE 21378 LED/DR/D2L/LW	-
947	Main Support Building	Exterior Penthouse Mechanical	32	48	4' Industrial Chain Mounted Fluorescent, (2) 48", Super T-8 lamp, Instant Start Ballast, NLO (BF: .85-.95) (No Diffuser)	32	24	Chain Mounted T8 LED Retrofit Lamp with External Driver LED 4' T8 Lamp (2) 12W Lamps			520	1.54	0.76	799	395	-	GE 34235 LEDT8/LC/G/4/840	GE 21378 LED/DR/D2L/LW	-
948	Main Support Building	Exterior Penthouse Mechanical	3	43	4' Vanity Wall Mounted Fluorescent, (2) 48", Super T-8 lamp, Instant Start Ballast, NLO (BF: .85-.95) Frosted Glass Lens	3	24	Wall Mounted T8 LED Retrofit Lamp with External Driver LED 4' T8 Lamp (2) 12W Lamps			520	0.13	0.07	68	37	-	GE 34235 LEDT8/LC/G/4/840	GE 21378 LED/DR/D2L/LW	-
949	Main Support Building	Exterior Penthouse Mechanical	1	19	Universal Face Exit Sign; White Surface Mounted Compact Fluorescent, twin, (2) 7W lamp (No Diffuser)	1	3	Surface Mounted Universal Face Exit Sign; White LED Light Fixture. (1) 3W			8760	0.02	0.00	166	26	TCP 22743 RD LED EXIT BBU WH HOUSING	-	-	-
950	Main Support Building	High Voltage Room	6	48	4' Industrial Chain Mounted Fluorescent, (2) 48", Super T-8 lamp, Instant Start Ballast, NLO (BF: .85-.95) (No Diffuser)	6	24	Chain Mounted T8 LED Retrofit Lamp with External Driver LED 4' T8 Lamp (2) 12W Lamps			520	0.29	0.14	150	74	-	GE 34235 LEDT8/LC/G/4/840	GE 21378 LED/DR/D2L/LW	-
951	Main Support Building	Medical Services Waiting Room Que	8	87	4' Wraparound; Tamper-Proof Surface Mounted Fluorescent, (4) 48", Super T-8 lamp, Instant Start Ballast, NLO (BF: .85-.95) Prismatic Acrylic Diffuser	8	48	Surface Mounted T8 LED Retrofit Lamp with External Driver LED 4' T8 Lamp (4) 12W Lamps			8760	0.69	0.38	6,072	3,330	-	GE 34235 LEDT8/LC/G/4/840	GE 21379 LED/DR/D4L/LW	-
952	Main Support Building	Medical Services Waiting Room Que	1	19	Universal Face Exit Sign; White Surface Mounted Compact Fluorescent, twin, (2) 7W lamp (No Diffuser)	1	3	Surface Mounted Universal Face Exit Sign; White LED Light Fixture. (1) 3W			8760	0.02	0.00	166	26	TCP 22743 RD LED EXIT BBU WH HOUSING	-	-	-
953	Main Support Building	Medical Control	2	43	2'x4' Dimmable Recessed Troffer Recessed Fluorescent, (2) 48", Super T-8 lamp, Instant Start Ballast, NLO (BF: .85-.95) Deep Cell Parabolic Diffuser	2	26	Recessed 2'x4' Troffer LED Light Fixture. (1) 26W			200	0.09	0.05	17	10	GE LPL24B04XMM840VQLTW	-	-	-
954	Main Support Building	Medical Corridor	25	43	2'x4' Troffer Recessed Fluorescent, (2) 48", Super T-8 lamp, Instant Start Ballast, NLO (BF: .85-.95) Prismatic Acrylic Diffuser	25	26	Recessed 2'x4' Troffer LED Light Fixture. (1) 26W			2600	1.08	0.64	2,816	1,673	GE LPL24B04XMM840VQLTW	-	-	-
955	Main Support Building	Medical Corridor	2	87	2'x4' Troffer Recessed Fluorescent, (4) 48", Super T-8 lamp, Instant Start Ballast, NLO (BF: .85-.95) Prismatic Acrylic Diffuser	2	26	Recessed 2'x4' Troffer LED Light Fixture. (1) 26W			6570	0.17	0.05	1,138	338	GE LPL24B04XMM840VQLTW	-	-	-
956	Main Support Building	Medical Corridor	2	19	Universal Face Exit Sign; White Surface Mounted Compact Fluorescent, twin, (2) 7W lamp (No Diffuser)	2	3	Surface Mounted Universal Face Exit Sign; White LED Light Fixture. (1) 3W			8760	0.04	0.01	332	52	TCP 22743 RD LED EXIT BBU WH HOUSING	-	-	-
957	Main Support Building	Medical Corridor	3	3	Universal Face Exit Sign; Black Surface Mounted EXIT C172Light Emitting Diode, (2) 1.5W lamp, Dual Sided (No Diffuser)	3	3	Existing luminaire to remain as is No Retrofit. To remain as is.			8760	0.01	0.01	74	74	-	-	-	-
958	Main Support Building	Medical Corridor	1	19	Universal Face Exit Sign; Black Surface Mounted Compact Fluorescent, twin, (2) 7W lamp (No Diffuser)	1	2	Surface Mounted Upgrade EXIT Sign LED Light Fixture. (1) 2W			8760	0.02	0.00	166	17	-	TCP 20716 RD LED PADDLE RETRO HARDWIRE	-	-
959	Main Support Building	Medical Records Office	9	65	2'x4' Troffer Recessed Fluorescent, (3) 48", Super T-8 lamp, Instant Start Ballast, NLO (BF: .85-.95) Prismatic Acrylic Diffuser	9	26	Recessed 2'x4' Troffer LED Light Fixture. (1) 26W			3640	0.58	0.23	2,129	843	GE LPL24B04XMM840VQLTW	-	-	-
960	Main Support Building	Medical Records Office	2	43	4' Wraparound; Tamper-Proof Surface Mounted Fluorescent, (2) 48", Super T-8 lamp, Instant Start Ballast, NLO (BF: .85-.95) Prismatic Acrylic Diffuser	2	24	Surface Mounted T8 LED Retrofit Lamp with External Driver LED 4' T8 Lamp (2) 12W Lamps			3640	0.09	0.05	315	173	-	GE 34235 LEDT8/LC/G/4/840	GE 21378 LED/DR/D2L/LW	-
961	Main Support Building	Exam Room 3.209	2	65	2'x4' Troffer Recessed Fluorescent, (3) 48", Super T-8 lamp, Instant Start Ballast, NLO (BF: .85-.95) Prismatic Acrylic Diffuser	2	26	Recessed 2'x4' Troffer LED Light Fixture. (1) 26W			4368	0.13	0.05	568	225	GE LPL24B04XMM840VQLTW	-	-	-
962	Main Support Building	Treatment 3.210	3	65	2'x4' Troffer Recessed Fluorescent, (3) 48", Super T-8 lamp, Instant Start Ballast, NLO (BF: .85-.95) Prismatic Acrylic Diffuser	3	26	Recessed 2'x4' Troffer LED Light Fixture. (1) 26W			4368	0.19	0.08	851	337	GE LPL24B04XMM840VQLTW	-	-	-
963	Main Support Building	Treatment 3.210	2	43	4' Wraparound; Tamper-Proof Surface Mounted Fluorescent, (2) 48", Super T-8 lamp, Instant Start Ballast, NLO (BF: .85-.95) Prismatic Acrylic Diffuser	2	24	Surface Mounted T8 LED Retrofit Lamp with External Driver LED 4' T8 Lamp (2) 12W Lamps			4368	0.09	0.05	378	208	-	GE 34235 LEDT8/LC/G/4/840	GE 21378 LED/DR/D2L/LW	-
964	Main Support Building	Ambulance Cart Storage	2	87	4' Wraparound; Tamper-Proof Surface Mounted Fluorescent, (4) 48", Super T-8 lamp, Instant Start Ballast, NLO (BF: .85-.95) Prismatic Acrylic Diffuser	2	48	Surface Mounted T8 LED Retrofit Lamp with External Driver LED 4' T8 Lamp (4) 12W Lamps			520	0.17	0.10	90	49	-	GE 34235 LEDT8/LC/G/4/840	GE 21379 LED/DR/D4L/LW	-
965	Main Support Building	Psychiatry Exam	1	65	2'x4' Troffer Recessed Flanged Fluorescent, (3) 48", Super T-8 lamp, Instant Start Ballast, NLO (BF: .85-.95) Prismatic Acrylic Diffuser	1	36	Recessed Flanged T8 LED Retrofit Lamp with External Driver LED 4' T8 Lamp (3) 12W Lamps			3640	0.06	0.04	237	130	-	GE 34235 LEDT8/LC/G/4/840	GE 21379 LED/DR/D4L/LW	-
966	Main Support Building	Dental Suite 3.507	3	43	2'x4' Troffer Recessed Fluorescent, (2) 48", Super T-8 lamp, Instant Start Ballast, NLO (BF: .85-.95) Prismatic Acrylic Diffuser	3	26	Recessed 2'x4' Troffer LED Light Fixture. (1) 26W			4368	0.13	0.08	568	337	GE LPL24B04XMM840VQLTW	-	-	-
967	Main Support Building	Dental Suite 3.507	8	65	2'x4' Troffer Recessed Fluorescent, (3) 48", Super T-8 lamp, Instant Start Ballast, NLO (BF: .85-.95) Prismatic Acrylic Diffuser	8	26	Recessed 2'x4' Troffer LED Light Fixture. (1) 26W			4368	0.52	0.21	2,271	899	GE LPL24B04XMM840VQLTW	-	-	-
968	Main Support Building	Dental Lab	3	65	2'x4' Troffer Recessed Flanged Fluorescent, (3) 48", Super T-8 lamp, Instant Start Ballast, NLO (BF: .85-.95) Prismatic Acrylic Diffuser	3	36	Recessed Flanged T8 LED Retrofit Lamp with External Driver LED 4' T8 Lamp (3) 12W Lamps			4368	0.19	0.11	851	467	-	GE 34235 LEDT8/LC/G/4/840	GE 21379 LED/DR/D4L/LW	-
969	Main Support Building	Dental Office	2	65	2'x4' Troffer Recessed Fluorescent, (3) 48", Super T-8 lamp, Instant Start Ballast, NLO (BF: .85-.95) Prismatic Acrylic Diffuser	2	26	Recessed 2'x4' Troffer LED Light Fixture. (1) 26W	1		3276	0.13	0.05	568	225	GE LPL24B04XMM840VQLTW	-	-	-
970	Main Support Building	Nurses Station	7	65	2'x4' Troffer Recessed Fluorescent, (3) 48", Super T-8 lamp, Instant Start Ballast, NLO (BF: .85-.95) Prismatic Acrylic Diffuser	7	26	Recessed 2'x4' Troffer LED Light Fixture. (1) 26W			4368	0.45	0.18	1,987	787	GE LPL24B04XMM840VQLTW	-	-	-
971	Main Support Building	Nurses Station	1	23	4' Strip Recessed Fluorescent, (1) 48", Super T-8 lamp, Instant Start Ballast, NLO (BF: .85-.95) Prismatic Acrylic Diffuser	1	12	Recessed T8 LED Retrofit Lamp with External Driver LED 4' T8 Lamp (1) 12W Lamp			4368	0.02	0.01	102	52	-	GE 34235 LEDT8/LC/G/4/840	GE 21378 LED/DR/D2L/LW	-
972	Main Support Building	Nurses Equipment Room	2	65	2'x4' Troffer Recessed Flanged Fluorescent, (3) 48", Super T-8 lamp, Instant Start Ballast, NLO (BF: .85-.95) Prismatic Acrylic Diffuser	2	36	Recessed Flanged T8 LED Retrofit Lamp with External Driver LED 4' T8 Lamp (3) 12W Lamps			3640	0.13	0.07	473	259	-	GE 34235 LEDT8/LC/G/4/840	GE 21379 LED/DR/D4L/LW	-
973	Main Support Building	Staff Womens Restroom	1	43	4' Wraparound; Tamper-Proof Surface Mounted Fluorescent, (2) 48", Super T-8 lamp, Instant Start Ballast, NLO (BF: .85-.95) Prismatic Acrylic Diffuser	1	24	Surface Mounted T8 LED Retrofit Lamp with External Driver LED 4' T8 Lamp (2) 12W Lamps			1456	0.04	0.02	63	35	-	GE 34235 LEDT8/LC/G/4/840	GE 21378 LED/DR/D2L/LW	-
974	Main Support Building	Staff Mens Restroom	1	43	4' Wraparound; Tamper-Proof Surface Mounted Fluorescent, (2) 48", Super T-8 lamp, Instant Start Ballast, NLO (BF: .85-.95) Prismatic Acrylic Diffuser	1	24	Surface Mounted T8 LED Retrofit Lamp with External Driver LED 4' T8 Lamp (2) 12W Lamps			1456	0.04	0.02	63	35	-	GE 34235 LEDT8/LC/G/4/840	GE 21378 LED/DR/D2L/LW	-

Line #	Facility Area	Space	Pre Fixture Qty	Pre Watts/ Fixt	Pre Description	Post Fixture Qty	Post Watt/ Fixt	Post Description	Wallswitch Sensor	Ceiling Sensor	Hours of Operation	Base kW	Proposed kW	Base kWh	Proposed kWh	Luminaire Part #	Lamp Part #	Driver Part#	Misc. Parts
975	Main Support Building	Lab Workroom	2	65	2'x4' Troffer Recessed Fluorescent, (3) 48", Super T-8 lamp, Instant Start Ballast, NLO (BF: .85-.95) Prismatic Acrylic Diffuser	2	26	Recessed 2'x4' Troffer LED Light Fixture. (1) 26W			4368	0.13	0.05	568	225	GE LPL24B04XMM840VQLTW	-	-	-
976	Main Support Building	Inmate Restroom	1	43	4' Wraparound; Tamper-Proof Surface Mounted Fluorescent, (2) 48", Super T-8 lamp, Instant Start Ballast, NLO (BF: .85-.95) Prismatic Acrylic Diffuser	1	24	Surface Mounted T8 LED Retrofit Lamp with External Driver LED 4' T8 Lamp (2) 12W Lamps	1		1092	0.04	0.02	63	35	-	GE 34235 LEDT8/LC/G/4/840	GE 21378 LED/DR/D2L/LW	-
977	Main Support Building	Doctors Exam Room	4	65	2'x4' Troffer Recessed Fluorescent, (3) 48", Super T-8 lamp, Instant Start Ballast, NLO (BF: .85-.95) Prismatic Acrylic Diffuser	4	26	Recessed 2'x4' Troffer LED Light Fixture. (1) 26W			3640	0.26	0.10	946	375	GE LPL24B04XMM840VQLTW	-	-	-
978	Main Support Building	Exam Room 1	4	65	2'x4' Troffer Recessed Fluorescent, (3) 48", Super T-8 lamp, Instant Start Ballast, NLO (BF: .85-.95) Prismatic Acrylic Diffuser	4	26	Recessed 2'x4' Troffer LED Light Fixture. (1) 26W			4368	0.26	0.10	1,135	450	GE LPL24B04XMM840VQLTW	-	-	-
979	Main Support Building	Medical Office Suite 3.105	2	65	2'x4' Troffer Recessed Fluorescent, (3) 48", Super T-8 lamp, Instant Start Ballast, NLO (BF: .85-.95) Prismatic Acrylic Diffuser	2	26	Recessed 2'x4' Troffer LED Light Fixture. (1) 26W		2	3276	0.13	0.05	568	225	GE LPL24B04XMM840VQLTW	-	-	-
980	Main Support Building	Medical Office Suite 3.105	2	43	2'x4' Troffer Recessed Fluorescent, (2) 48", Super T-8 lamp, Instant Start Ballast, NLO (BF: .85-.95) Prismatic Acrylic Diffuser	2	26	Recessed 2'x4' Troffer LED Light Fixture. (1) 26W			4368	0.09	0.05	378	225	GE LPL24B04XMM840VQLTW	-	-	-
981	Main Support Building	Office 3.105	2	43	2'x4' Troffer Recessed Fluorescent, (2) 48", Super T-8 lamp, Instant Start Ballast, NLO (BF: .85-.95) Prismatic Acrylic Diffuser	2	26	Recessed 2'x4' Troffer LED Light Fixture. (1) 26W	1		2730	0.09	0.05	315	187	GE LPL24B04XMM840VQLTW	-	-	-
982	Main Support Building	Office 3.102	2	65	2'x4' Troffer Recessed Fluorescent, (3) 48", Super T-8 lamp, Instant Start Ballast, NLO (BF: .85-.95) Prismatic Acrylic Diffuser	2	26	Recessed 2'x4' Troffer LED Light Fixture. (1) 26W			3640	0.13	0.05	473	187	GE LPL24B04XMM840VQLTW	-	-	-
983	Main Support Building	Office 3.104	2	65	2'x4' Troffer Recessed Fluorescent, (3) 48", Super T-8 lamp, Instant Start Ballast, NLO (BF: .85-.95) Prismatic Acrylic Diffuser	2	26	Recessed 2'x4' Troffer LED Light Fixture. (1) 26W	1		2730	0.13	0.05	473	187	GE LPL24B04XMM840VQLTW	-	-	-
984	Main Support Building	Office 3.111	2	65	2'x4' Troffer Recessed Fluorescent, (3) 48", Super T-8 lamp, Instant Start Ballast, NLO (BF: .85-.95) Prismatic Acrylic Diffuser	2	26	Recessed 2'x4' Troffer LED Light Fixture. (1) 26W			3640	0.13	0.05	473	187	GE LPL24B04XMM840VQLTW	-	-	-
985	Main Support Building	Staff Mens Restroom	1	43	4' Wraparound; Tamper-Proof Surface Mounted Fluorescent, (2) 48", Super T-8 lamp, Instant Start Ballast, NLO (BF: .85-.95) Prismatic Acrylic Diffuser	1	24	Surface Mounted T8 LED Retrofit Lamp with External Driver LED 4' T8 Lamp (2) 12W Lamps			1456	0.04	0.02	63	35	-	GE 34235 LEDT8/LC/G/4/840	GE 21378 LED/DR/D2L/LW	-
986	Main Support Building	Staff Womens Restroom	1	43	4' Wraparound; Tamper-Proof Surface Mounted Fluorescent, (2) 48", Super T-8 lamp, Instant Start Ballast, NLO (BF: .85-.95) Prismatic Acrylic Diffuser	1	24	Surface Mounted T8 LED Retrofit Lamp with External Driver LED 4' T8 Lamp (2) 12W Lamps			1456	0.04	0.02	63	35	-	GE 34235 LEDT8/LC/G/4/840	GE 21378 LED/DR/D2L/LW	-
987	Main Support Building	Office 3.109	2	65	2'x4' Troffer Recessed Fluorescent, (3) 48", Super T-8 lamp, Instant Start Ballast, NLO (BF: .85-.95) Prismatic Acrylic Diffuser	2	26	Recessed 2'x4' Troffer LED Light Fixture. (1) 26W			3640	0.13	0.05	473	187	GE LPL24B04XMM840VQLTW	-	-	-
988	Main Support Building	Office 3.101	3	65	2'x4' Troffer Recessed Fluorescent, (3) 48", Super T-8 lamp, Instant Start Ballast, NLO (BF: .85-.95) Prismatic Acrylic Diffuser	3	26	Recessed 2'x4' Troffer LED Light Fixture. (1) 26W			3640	0.19	0.08	710	281	GE LPL24B04XMM840VQLTW	-	-	-
989	Main Support Building	Office 3.108	3	65	2'x4' Troffer Recessed Fluorescent, (3) 48", Super T-8 lamp, Instant Start Ballast, NLO (BF: .85-.95) Prismatic Acrylic Diffuser	3	26	Recessed 2'x4' Troffer LED Light Fixture. (1) 26W			3640	0.19	0.08	710	281	GE LPL24B04XMM840VQLTW	-	-	-
990	Main Support Building	Exam Room 2	4	65	2'x4' Troffer Recessed Fluorescent, (3) 48", Super T-8 lamp, Instant Start Ballast, NLO (BF: .85-.95) Prismatic Acrylic Diffuser	4	26	Recessed 2'x4' Troffer LED Light Fixture. (1) 26W			4368	0.26	0.10	1,135	450	GE LPL24B04XMM840VQLTW	-	-	-
991	Main Support Building	X-Ray Suite 3.213	1	87	4' Wraparound; Tamper-Proof Surface Mounted Fluorescent, (4) 48", Super T-8 lamp, Instant Start Ballast, NLO (BF: .85-.95) Prismatic Acrylic Diffuser	1	48	Surface Mounted T8 LED Retrofit Lamp with External Driver LED 4' T8 Lamp (4) 12W Lamps			4368	0.09	0.05	378	208	-	GE 34235 LEDT8/LC/G/4/840	GE 21379 LED/DR/D4L/LW	-
992	Main Support Building	X-Ray Suite 3.213	2	18	Recessed Can 8" Recessed Compact Fluorescent, spiral, (1) 20W lamp Frosted Glass Lens	2	11	Recessed Install LED Screw-in A-Style Lamp Light Emitting Diode Lamp, Screw-in, (1) 12W lamp			4368	0.04	0.02	158	94	-	TCP L11A19D2541K	-	-
993	Main Support Building	Dark Room 3.214 (storage)	2	38	1'x1' Square Recessed Incandescent, (1) 40W lamp Flat Glass Lens	2	8	Recessed Install LED Screw-in A-Style Lamp Light Emitting Diode Lamp, Screw-in, (1) 9W lamp			520	0.08	0.02	40	8	-	TCP L9A19D2541K	-	-
994	Main Support Building	Electrical Closet 3.223 (storage)	1	9	Wall-Pack Wall Mounted Compact Fluorescent, twin, (1) 7W lamp Prismatic Acrylic Diffuser	1	9	Existing luminaire to remain as is No Retrofit. To remain as is.			200	0.01	0.01	2	2	-	-	-	-
995	Main Support Building	X-Ray Viewing Room 2.215	3	65	2'x4' Troffer Recessed Fluorescent, (3) 48", Super T-8 lamp, Instant Start Ballast, NLO (BF: .85-.95) Prismatic Acrylic Diffuser	3	26	Recessed 2'x4' Troffer LED Light Fixture. (1) 26W			3640	0.19	0.08	710	281	GE LPL24B04XMM840VQLTW	-	-	-
996	Main Support Building	Medical Holding Cell 1	2	87	4' Wraparound; Tamper-Proof Surface Mounted Fluorescent, (4) 48", Super T-8 lamp, Instant Start Ballast, NLO (BF: .85-.95) Prismatic Acrylic Diffuser	2	48	Surface Mounted T8 LED Retrofit Lamp with External Driver LED 4' T8 Lamp (4) 12W Lamps			2912	0.17	0.10	505	277	-	GE 34235 LEDT8/LC/G/4/840	GE 21379 LED/DR/D4L/LW	-
997	Main Support Building	Medical Holding Cell 1	1	9	Wall-Pack Wall Mounted Compact Fluorescent, twin, (1) 7W lamp Prismatic Acrylic Diffuser	1	9	Existing luminaire to remain as is No Retrofit. To remain as is.			1560	0.01	0.01	14	14	-	-	-	-
998	Main Support Building	Medical Holding Cell 2	2	87	4' Wraparound; Tamper-Proof Surface Mounted Fluorescent, (4) 48", Super T-8 lamp, Instant Start Ballast, NLO (BF: .85-.95) Prismatic Acrylic Diffuser	2	48	Surface Mounted T8 LED Retrofit Lamp with External Driver LED 4' T8 Lamp (4) 12W Lamps			2912	0.17	0.10	505	277	-	GE 34235 LEDT8/LC/G/4/840	GE 21379 LED/DR/D4L/LW	-
999	Main Support Building	Medical Holding Cell 2	1	9	Wall-Pack Wall Mounted Compact Fluorescent, twin, (1) 7W lamp Prismatic Acrylic Diffuser	1	9	Existing luminaire to remain as is No Retrofit. To remain as is.			1560	0.01	0.01	14	14	-	-	-	-
1000	Main Support Building	Medical Holding Cell 3	2	87	4' Wraparound; Tamper-Proof Surface Mounted Fluorescent, (4) 48", Super T-8 lamp, Instant Start Ballast, NLO (BF: .85-.95) Prismatic Acrylic Diffuser	2	48	Surface Mounted T8 LED Retrofit Lamp with External Driver LED 4' T8 Lamp (4) 12W Lamps			2912	0.17	0.10	505	277	-	GE 34235 LEDT8/LC/G/4/840	GE 21379 LED/DR/D4L/LW	-
1001	Main Support Building	Medical Holding Cell 3	1	9	Wall-Pack Wall Mounted Compact Fluorescent, twin, (1) 7W lamp Prismatic Acrylic Diffuser	1	9	Existing luminaire to remain as is No Retrofit. To remain as is.			1560	0.01	0.01	14	14	-	-	-	-
1002	Main Support Building	Medical Holding Cell 4	2	87	4' Wraparound; Tamper-Proof Surface Mounted Fluorescent, (4) 48", Super T-8 lamp, Instant Start Ballast, NLO (BF: .85-.95) Prismatic Acrylic Diffuser	2	48	Surface Mounted T8 LED Retrofit Lamp with External Driver LED 4' T8 Lamp (4) 12W Lamps			2912	0.17	0.10	505	277	-	GE 34235 LEDT8/LC/G/4/840	GE 21379 LED/DR/D4L/LW	-
1003	Main Support Building	Medical Holding Cell 4	1	9	Wall-Pack Wall Mounted Compact Fluorescent, twin, (1) 7W lamp Prismatic Acrylic Diffuser	1	9	Existing luminaire to remain as is No Retrofit. To remain as is.			1560	0.01	0.01	14	14	-	-	-	-
1004	Main Support Building	Medical Holding Cell 5	2	87	4' Wraparound; Tamper-Proof Surface Mounted Fluorescent, (4) 48", Super T-8 lamp, Instant Start Ballast, NLO (BF: .85-.95) Prismatic Acrylic Diffuser	2	48	Surface Mounted T8 LED Retrofit Lamp with External Driver LED 4' T8 Lamp (4) 12W Lamps			2912	0.17	0.10	505	277	-	GE 34235 LEDT8/LC/G/4/840	GE 21379 LED/DR/D4L/LW	-
1005	Main Support Building	Mens Shower 3.305	1	43	4' Wraparound; Tamper-Proof Surface Mounted Fluorescent, (2) 48", Super T-8 lamp, Instant Start Ballast, NLO (BF: .85-.95) Prismatic Acrylic Diffuser	1	46	Surface Mounted 4' Wraparound; Tamper-Proof LED Light Fixture. (1) 46W			1456	0.04	0.05	63	66	COOPER FAILSAFE FVS8P-4-LD4-2LO-40-UNV-P125-EDC1-WL	-	-	-
1006	Main Support Building	Mens Shower 3.306	1	43	4' Wraparound; Tamper-Proof Surface Mounted Fluorescent, (2) 48", Super T-8 lamp, Instant Start Ballast, NLO (BF: .85-.95) Prismatic Acrylic Diffuser	1	46	Surface Mounted 4' Wraparound; Tamper-Proof LED Light Fixture. (1) 46W			1456	0.04	0.05	63	66	COOPER FAILSAFE FVS8P-4-LD4-2LO-40-UNV-P125-EDC1-WL	-	-	-
1007	Main Support Building	Tub Room 3.307	1	87	4' Wraparound; Tamper-Proof Surface Mounted Fluorescent, (4) 48", Super T-8 lamp, Instant Start Ballast, NLO (BF: .85-.95) Prismatic Acrylic Diffuser	1	48	Surface Mounted T8 LED Retrofit Lamp with External Driver LED 4' T8 Lamp (4) 12W Lamps			1456	0.09	0.05	126	69	-	GE 34235 LEDT8/LC/G/4/840	GE 21379 LED/DR/D4L/LW	-
1008	Main Support Building	Linen closet 3.302	1	65	2'x4' Troffer Recessed Fluorescent, (3) 48", Super T-8 lamp, Instant Start Ballast, NLO (BF: .85-.95) Prismatic Acrylic Diffuser	1	26	Recessed 2'x4' Troffer LED Light Fixture. (1) 26W			1560	0.06	0.03	101	40	GE LPL24B04XMM840VQLTW	-	-	-
1009	Main Support Building	Activity Area / TV	9	43	4' Vanity Wall Mounted Fluorescent, (2) 48", Super T-8 lamp, Instant Start Ballast, NLO (BF: .85-.95) Deep Cell Parabolic Diffuser	9	24	Wall Mounted T8 LED Retrofit Lamp with External Driver LED 4' T8 Lamp (2) 12W Lamps			1560	0.39	0.21	608	334	-	GE 34235 LEDT8/LC/G/4/840	GE 21378 LED/DR/D2L/LW	-
1010	Main Support Building	Medical Holding Cell 6	2	87	4' Wraparound; Tamper-Proof Surface Mounted Fluorescent, (4) 48", Super T-8 lamp, Instant Start Ballast, NLO (BF: .85-.95) Prismatic Acrylic Diffuser	2	48	Surface Mounted T8 LED Retrofit Lamp with External Driver LED 4' T8 Lamp (4) 12W Lamps			2912	0.17	0.10	505	277	-	GE 34235 LEDT8/LC/G/4/840	GE 21379 LED/DR/D4L/LW	-
1011	Main Support Building	Medical Holding Cell 6	1	9	Wall-Pack Wall Mounted Compact Fluorescent, twin, (1) 7W lamp Prismatic Acrylic Diffuser	1	9	Existing luminaire to remain as is No Retrofit. To remain as is.			1560	0.01	0.01	14	14	-	-	-	-
1012	Main Support Building	Isolation 7 Vestibule Work Area	2	43	4' Wraparound; Tamper-Proof Surface Mounted Fluorescent, (2) 48", Super T-8 lamp, Instant Start Ballast, NLO (BF: .85-.95) Prismatic Acrylic Diffuser	2	24	Surface Mounted T8 LED Retrofit Lamp with External Driver LED 4' T8 Lamp (2) 12W Lamps			1560	0.09	0.05	135	74	-	GE 34235 LEDT8/LC/G/4/840	GE 21378 LED/DR/D2L/LW	-
1013	Main Support Building	Isolation Cell 7	2	87	4' Wraparound; Tamper-Proof Surface Mounted Fluorescent, (4) 48", Super T-8 lamp, Instant Start Ballast, NLO (BF: .85-.95) Prismatic Acrylic Diffuser	2	48	Surface Mounted T8 LED Retrofit Lamp with External Driver LED 4' T8 Lamp (4) 12W Lamps			2912	0.17	0.10	505	277	-	GE 34235 LEDT8/LC/G/4/840	GE 21379 LED/DR/D4L/LW	-

Line #	Facility Area	Space	Pre Fixture Qty	Pre Watts/ Fixt	Pre Description	Post Fixture Qty	Post Watt/ Fixt	Post Description	Wallswitch Sensor	Ceiling Sensor	Hours of Operation	Base kW	Proposed kW	Base kWh	Proposed kWh	Luminaire Part #	Lamp Part #	Driver Part#	Misc. Parts
1014	Main Support Building	Isolation Cell 7	1	9	Wall-Pack Wall Mounted Compact Fluorescent, twin, (1) 7W lamp Prismatic Acrylic Diffuser	1	9	Existing luminaire to remain as is No Retrofit. To remain as is.			1560	0.01	0.01	14	14	-	-	-	-
1015	Main Support Building	Isolation 8 Vestibule Work Area	2	43	4' Wraparound; Tamper-Proof Surface Mounted Fluorescent, (2) 48", Super T-8 lamp, Instant Start Ballast, NLO (BF: .85-.95) Prismatic Acrylic Diffuser	2	24	Surface Mounted T8 LED Retrofit Lamp with External Driver LED 4' T8 Lamp (2) 12W Lamps			1560	0.09	0.05	135	74	-	GE 34235 LEDT8/LC/G/4/840	GE 21378 LED/DR/D2L/LW	-
1016	Main Support Building	Isolation Cell 8	2	87	4' Wraparound; Tamper-Proof Surface Mounted Fluorescent, (4) 48", Super T-8 lamp, Instant Start Ballast, NLO (BF: .85-.95) Prismatic Acrylic Diffuser	2	48	Surface Mounted T8 LED Retrofit Lamp with External Driver LED 4' T8 Lamp (4) 12W Lamps			2912	0.17	0.10	505	277	-	GE 34235 LEDT8/LC/G/4/840	GE 21379 LED/DR/D4L/LW	-
1017	Main Support Building	Isolation Cell 8	1	9	Wall-Pack Wall Mounted Compact Fluorescent, twin, (1) 7W lamp Prismatic Acrylic Diffuser	1	9	Existing luminaire to remain as is No Retrofit. To remain as is.			1560	0.01	0.01	14	14	-	-	-	-
1018	Main Support Building	Electrical Closet 3.319	1	48	4' Industrial Chain Mounted Fluorescent, (2) 48", Super T-8 lamp, Instant Start Ballast, NLO (BF: .85-.95) (No Diffuser)	1	24	Chain Mounted T8 LED Retrofit Lamp with External Driver LED 4' T8 Lamp (2) 12W Lamps			520	0.05	0.02	25	12	-	GE 34235 LEDT8/LC/G/4/840	GE 21378 LED/DR/D2L/LW	-
1019	Main Support Building	Custodial Closet 3.308	1	43	4' Wraparound; Tamper-Proof Surface Mounted Fluorescent, (2) 48", Super T-8 lamp, Instant Start Ballast, NLO (BF: .85-.95) Prismatic Acrylic Diffuser	1	24	Surface Mounted T8 LED Retrofit Lamp with External Driver LED 4' T8 Lamp (2) 12W Lamps			1560	0.04	0.02	68	37	-	GE 34235 LEDT8/LC/G/4/840	GE 21378 LED/DR/D2L/LW	-
1020	Main Support Building	Isolation Cell 9	1	65	4' Wraparound; Tamper-Proof Surface Mounted Fluorescent, (3) 48", Super T-8 lamp, Instant Start Ballast, NLO (BF: .85-.95) Prismatic Acrylic Diffuser	1	36	Surface Mounted T8 LED Retrofit Lamp with External Driver LED 4' T8 Lamp (3) 12W Lamps			2912	0.06	0.04	189	104	-	GE 34235 LEDT8/LC/G/4/840	GE 21379 LED/DR/D4L/LW	-
1021	Main Support Building	Isolation Cell 10	1	65	4' Wraparound; Tamper-Proof Surface Mounted Fluorescent, (3) 48", Super T-8 lamp, Instant Start Ballast, NLO (BF: .85-.95) Prismatic Acrylic Diffuser	1	36	Surface Mounted T8 LED Retrofit Lamp with External Driver LED 4' T8 Lamp (3) 12W Lamps			2912	0.06	0.04	189	104	-	GE 34235 LEDT8/LC/G/4/840	GE 21379 LED/DR/D4L/LW	-
1022	Main Support Building	Isolation Cell 11	1	65	4' Wraparound; Tamper-Proof Surface Mounted Fluorescent, (3) 48", Super T-8 lamp, Instant Start Ballast, NLO (BF: .85-.95) Prismatic Acrylic Diffuser	1	36	Surface Mounted T8 LED Retrofit Lamp with External Driver LED 4' T8 Lamp (3) 12W Lamps			2912	0.06	0.04	189	104	-	GE 34235 LEDT8/LC/G/4/840	GE 21379 LED/DR/D4L/LW	-
1023	Main Support Building	Isolation Cell 12	1	65	4' Wraparound; Tamper-Proof Surface Mounted Fluorescent, (3) 48", Super T-8 lamp, Instant Start Ballast, NLO (BF: .85-.95) Prismatic Acrylic Diffuser	1	36	Surface Mounted T8 LED Retrofit Lamp with External Driver LED 4' T8 Lamp (3) 12W Lamps			2912	0.06	0.04	189	104	-	GE 34235 LEDT8/LC/G/4/840	GE 21379 LED/DR/D4L/LW	-
1024	Main Support Building	Shower 3.703	1	43	4' Corner Mount Wall Vanity; Tamper-Proof Wall Mounted Fluorescent, (2) 48", Super T-8 lamp, Instant Start Ballast, NLO (BF: .85-.95) Prismatic Acrylic Diffuser	1	24	Wall Mounted T8 LED Retrofit Lamp with External Driver LED 4' T8 Lamp (2) 12W Lamps			1560	0.04	0.02	68	37	-	GE 34235 LEDT8/LC/G/4/840	GE 21378 LED/DR/D2L/LW	-
1025	Main Support Building	Quiet Holding 3.328	1	65	2'x4' Troffer Recessed Flanged Fluorescent, (3) 48", Super T-8 lamp, Instant Start Ballast, NLO (BF: .85-.95) Prismatic Acrylic Diffuser	1	36	Recessed Flanged T8 LED Retrofit Lamp with External Driver LED 4' T8 Lamp (3) 12W Lamps			1560	0.06	0.04	101	56	-	GE 34235 LEDT8/LC/G/4/840	GE 21379 LED/DR/D4L/LW	-
1026	Main Support Building	Medical Conference Room / Work Room	2	65	2'x4' Troffer Recessed Fluorescent, (3) 48", Super T-8 lamp, Instant Start Ballast, NLO (BF: .85-.95) Prismatic Acrylic Diffuser	2	26	Recessed 2'x4' Troffer LED Light Fixture. (1) 26W			1560	0.13	0.05	203	80	GE LPL24B04XMM840VQLTW	-	-	-
1027	Main Support Building	Medical Conference Room / Work Room	1	65	2'x4' Troffer Recessed Fluorescent, (3) 48", Super T-8 lamp, Instant Start Ballast, NLO (BF: .85-.95) Deep Cell Parabolic Diffuser	1	26	Recessed 2'x4' Troffer LED Light Fixture. (1) 26W			1560	0.06	0.03	101	40	GE LPL24B04XMM840VQLTW	-	-	-
1028	Main Support Building	Medical Conference Room / Work Room	1	43	2'x4' Troffer Recessed Fluorescent, (2) 48", Super T-8 lamp, Instant Start Ballast, NLO (BF: .85-.95) Deep Cell Parabolic Diffuser	1	26	Recessed 2'x4' Troffer LED Light Fixture. (1) 26W			1560	0.04	0.03	68	40	GE LPL24B04XMM840VQLTW	-	-	-
1029	Main Support Building	Medical Records 3.209	2	65	2'x4' Troffer Recessed Fluorescent, (3) 48", Super T-8 lamp, Instant Start Ballast, NLO (BF: .85-.95) Prismatic Acrylic Diffuser	2	26	Recessed 2'x4' Troffer LED Light Fixture. (1) 26W	1		1170	0.13	0.05	203	80	GE LPL24B04XMM840VQLTW	-	-	-
1030	Main Support Building	Interview Room 3.330	1	43	2'x4' Troffer Recessed Flanged Fluorescent, (2) 48", Super T-8 lamp, Instant Start Ballast, NLO (BF: .85-.95) Prismatic Acrylic Diffuser	1	24	Recessed Flanged T8 LED Retrofit Lamp with External Driver LED 4' T8 Lamp (2) 12W Lamps			520	0.04	0.02	23	12	-	GE 34235 LEDT8/LC/G/4/840	GE 21378 LED/DR/D2L/LW	-
1031	Main Support Building	General Storage Closet 3.329	1	43	2'x4' Troffer Recessed Flanged Fluorescent, (2) 48", Super T-8 lamp, Instant Start Ballast, NLO (BF: .85-.95) Prismatic Acrylic Diffuser	1	24	Recessed Flanged T8 LED Retrofit Lamp with External Driver LED 4' T8 Lamp (2) 12W Lamps			520	0.04	0.02	23	12	-	GE 34235 LEDT8/LC/G/4/840	GE 21378 LED/DR/D2L/LW	-
1032	Main Support Building	Pharmacy Corridor	3	43	2'x4' Troffer Recessed Fluorescent, (2) 48", Super T-8 lamp, Instant Start Ballast, NLO (BF: .85-.95) Prismatic Acrylic Diffuser	3	26	Recessed 2'x4' Troffer LED Light Fixture. (1) 26W			8760	0.13	0.08	1,138	676	GE LPL24B04XMM840VQLTW	-	-	-
1033	Main Support Building	Pharmacy Corridor	1	19	Universal Face Exit Sign; White Surface Mounted Compact Fluorescent, twin, (2) 7W lamp (No Diffuser)	1	3	Surface Mounted Universal Face Exit Sign; White LED Light Fixture. (1) 3W			8760	0.02	0.00	166	26	TCP 22743 RD LED EXIT BBU WH HOUSING	-	-	-
1034	Main Support Building	Clean Utility 3.702 (med records storage)	2	65	2'x4' Troffer Recessed Flanged Fluorescent, (3) 48", Super T-8 lamp, Instant Start Ballast, NLO (BF: .85-.95) Prismatic Acrylic Diffuser	2	36	Recessed Flanged T8 LED Retrofit Lamp with External Driver LED 4' T8 Lamp (3) 12W Lamps			520	0.13	0.07	68	37	-	GE 34235 LEDT8/LC/G/4/840	GE 21379 LED/DR/D4L/LW	-
1035	Main Support Building	Soiled Utility 3.702 (med records storage) 3.701	1	65	2'x4' Troffer Recessed Flanged Fluorescent, (3) 48", Super T-8 lamp, Instant Start Ballast, NLO (BF: .85-.95) Prismatic Acrylic Diffuser	1	36	Recessed Flanged T8 LED Retrofit Lamp with External Driver LED 4' T8 Lamp (3) 12W Lamps			520	0.06	0.04	34	19	-	GE 34235 LEDT8/LC/G/4/840	GE 21379 LED/DR/D4L/LW	-
1036	Main Support Building	General Waste Disposal 3.706	1	43	4' Wraparound; Tamper-Proof Surface Mounted Fluorescent, (2) 48", Super T-8 lamp, Instant Start Ballast, NLO (BF: .85-.95) Prismatic Acrylic Diffuser	1	24	Surface Mounted T8 LED Retrofit Lamp with External Driver LED 4' T8 Lamp (2) 12W Lamps			1456	0.04	0.02	63	35	-	GE 34235 LEDT8/LC/G/4/840	GE 21378 LED/DR/D2L/LW	-
1037	Main Support Building	Infect Waste Disposal 3.705	1	43	4' Wraparound; Tamper-Proof Surface Mounted Fluorescent, (2) 48", Super T-8 lamp, Instant Start Ballast, NLO (BF: .85-.95) Prismatic Acrylic Diffuser	1	24	Surface Mounted T8 LED Retrofit Lamp with External Driver LED 4' T8 Lamp (2) 12W Lamps			1456	0.04	0.02	63	35	-	GE 34235 LEDT8/LC/G/4/840	GE 21378 LED/DR/D2L/LW	-
1038	Main Support Building	Medical Supply 3.704	3	43	2'x4' Troffer Recessed Fluorescent, (2) 48", Super T-8 lamp, Instant Start Ballast, NLO (BF: .85-.95) Prismatic Acrylic Diffuser	3	26	Recessed 2'x4' Troffer LED Light Fixture. (1) 26W			520	0.13	0.08	68	40	GE LPL24B04XMM840VQLTW	-	-	-
1039	Main Support Building	Pharmacy 3.401	2	65	2'x4' Troffer Recessed Fluorescent, (3) 48", Super T-8 lamp, Instant Start Ballast, NLO (BF: .85-.95) Prismatic Acrylic Diffuser	2	26	Recessed 2'x4' Troffer LED Light Fixture. (1) 26W			4368	0.13	0.05	568	225	GE LPL24B04XMM840VQLTW	-	-	-
1040	Main Support Building	Pharmacy 3.401	3	43	2'x4' Troffer Recessed Fluorescent, (2) 48", Super T-8 lamp, Instant Start Ballast, NLO (BF: .85-.95) Prismatic Acrylic Diffuser	3	26	Recessed 2'x4' Troffer LED Light Fixture. (1) 26W			4368	0.13	0.08	568	337	GE LPL24B04XMM840VQLTW	-	-	-
1041	Main Support Building	Staff Dining Hall	6	266	Cylinder Fixture Pendant Mounted Metal Halide, (1) 250W lamp Flat Glass Lens	6	99	Pendant Mounted Metal Alloy High-Bay LED Light Fixture. (1) 100W - HIGH			5824	1.60	0.59	9,303	3,459	GLOBAL GLEDPHB2A-100W-40K-120	-	-	-
1042	Main Support Building	Staff Dining Hall	12	23	4' Up Light Wall Mounted Fluorescent, (1) 48", Super T-8 lamp, Instant Start Ballast, NLO (BF: .85-.95) (No Diffuser)	12	12	Wall Mounted T8 LED Retrofit Lamp with External Driver LED 4' T8 Lamp (1) 12W Lamp			5824	0.28	0.14	1,640	830	-	GE 34235 LEDT8/LC/G/4/840	GE 21378 LED/DR/D2L/LW	-
1043	Main Support Building	Staff Dining Hall	12	116	Recessed Can 12" Recessed Metal Halide, (1) 100W lamp Prismatic Acrylic Diffuser	12	32	Recessed Chip On Board (COB) Type Screw-in / Bypass Existing Ballast Light Emitting Diode Lamp, Screw-in, (1) 36W lamp			5824	1.39	0.39	8,073	2,264	-	KEYSTONE KT-LED36HID-E26-840-D	-	-
1044	Main Support Building	Staff Dining Hall	5	65	2'x4' Troffer Recessed Flanged Fluorescent, (3) 48", Super T-8 lamp, Instant Start Ballast, NLO (BF: .85-.95) Prismatic Acrylic Diffuser	5	36	Recessed Flanged T8 LED Retrofit Lamp with External Driver LED 4' T8 Lamp (3) 12W Lamps			5824	0.32	0.18	1,892	1,038	-	GE 34235 LEDT8/LC/G/4/840	GE 21379 LED/DR/D4L/LW	-
1045	Main Support Building	Staff Dining Hall	1	43	1'x4' Troffer Recessed Flanged Fluorescent, (2) 48", Super T-8 lamp, Instant Start Ballast, NLO (BF: .85-.95) Prismatic Acrylic Diffuser	1	24	Recessed Flanged T8 LED Retrofit Lamp with External Driver LED 4' T8 Lamp (2) 12W Lamps			5824	0.04	0.02	252	138	-	GE 34235 LEDT8/LC/G/4/840	GE 21378 LED/DR/D2L/LW	-
1046	Main Support Building	Womens Staff Restroom	1	43	4' Wraparound; Tamper-Proof Surface Mounted Fluorescent, (2) 48", Super T-8 lamp, Instant Start Ballast, NLO (BF: .85-.95) Prismatic Acrylic Diffuser	1	24	Surface Mounted T8 LED Retrofit Lamp with External Driver LED 4' T8 Lamp (2) 12W Lamps	1		1092	0.04	0.02	63	35	-	GE 34235 LEDT8/LC/G/4/840	GE 21378 LED/DR/D2L/LW	-
1047	Main Support Building	Mens Staff Restroom	1	43	4' Wraparound; Tamper-Proof Surface Mounted Fluorescent, (2) 48", Super T-8 lamp, Instant Start Ballast, NLO (BF: .85-.95) Prismatic Acrylic Diffuser	1	24	Surface Mounted T8 LED Retrofit Lamp with External Driver LED 4' T8 Lamp (2) 12W Lamps	1		1092	0.04	0.02	63	35	-	GE 34235 LEDT8/LC/G/4/840	GE 21378 LED/DR/D2L/LW	-
1048	Main Support Building	Inmate Dining 1	9	266	Cylinder Fixture Pendant Mounted Metal Halide, (1) 250W lamp Flat Glass Lens	9	99	Pendant Mounted Metal Alloy High-Bay LED Light Fixture. (1) 100W - HIGH			5824	2.40	0.89	13,955	5,189	GLOBAL GLEDPHB2A-100W-40K-120	-	-	-
1049	Main Support Building	Inmate Dining 1	24	23	4' Up Light Wall Mounted Fluorescent, (1) 48", Super T-8 lamp, Instant Start Ballast, NLO (BF: .85-.95) (No Diffuser)	24	12	Wall Mounted T8 LED Retrofit Lamp with External Driver LED 4' T8 Lamp (1) 12W Lamp			5824	0.56	0.29	3,280	1,661	-	GE 34235 LEDT8/LC/G/4/840	GE 21378 LED/DR/D2L/LW	-
1050	Main Support Building	Inmate Dining 1	21	116	Recessed Can 12" Recessed Metal Halide, (1) 100W lamp Prismatic Acrylic Diffuser	21	32	Recessed Chip On Board (COB) Type Screw-in / Bypass Existing Ballast Light Emitting Diode Lamp, Screw-in, (1) 36W lamp			5824	2.43	0.68	14,129	3,963	-	KEYSTONE KT-LED36HID-E26-840-D	-	-
1051	Main Support Building	Inmate Dining 2	9	266	Cylinder Fixture Pendant Mounted Metal Halide, (1) 250W lamp Flat Glass Lens	9	99	Pendant Mounted Metal Alloy High-Bay LED Light Fixture. (1) 100W - HIGH			5824	2.40	0.89	13,955	5,189	GLOBAL GLEDPHB2A-100W-40K-120	-	-	-
1052	Main Support Building	Inmate Dining 2	24	23	4' Up Light Wall Mounted Fluorescent, (1) 48", Super T-8 lamp, Instant Start Ballast, NLO (BF: .85-.95) (No Diffuser)	24	12	Wall Mounted T8 LED Retrofit Lamp with External Driver LED 4' T8 Lamp (1) 12W Lamp			5824	0.56	0.29	3,280	1,661	-	GE 34235 LEDT8/LC/G/4/840	GE 21378 LED/DR/D2L/LW	-

Line #	Facility Area	Space	Pre Fixture Qty	Pre Watts/ Fixt	Pre Description	Post Fixture Qty	Post Watt/ Fixt	Post Description	Wallswitch Sensor	Ceiling Sensor	Hours of Operation	Base kW	Proposed kW	Base kWh	Proposed kWh	Luminaire Part #	Lamp Part #	Driver Part#	Misc. Parts
1053	Main Support Building	Inmate Dining 2	21	116	Recessed Can 12" Recessed Metal Halide, (1) 100W lamp Prismatic Acrylic Diffuser	21	32	Recessed Chip On Board (COB) Type Screw-in / Bypass Existing Ballast Light Emitting Diode Lamp, Screw-in, (1) 36W lamp - HIGH			5824	2.43	0.68	14,129	3,963	-	KEYSTONE KT-LED36HID-E26-840-D	-	-
1054	Main Support Building	Inmate Dining 2	1	19	Universal Face Exit Sign; Black Surface Mounted Compact Fluorescent, twin, (2) 7W lamp (No Diffuser)	1	2	Surface Mounted Upgrade EXIT Sign LED Light Fixture. (1) 2W			8760	0.02	0.00	166	17	-	TCP 20716 RD LED PADDLE RETRO HARDWIRE	-	-
1055	Main Support Building	Inmate Dining 3	9	266	Cylinder Fixture Pendant Mounted Metal Halide, (1) 250W lamp Flat Glass Lens	9	99	Pendant Mounted Metal Alloy High-Bay LED Light Fixture. (1) 100W - HIGH			5824	2.40	0.89	13,955	5,189	GLOBAL GLEDPHB2A-100W-40K-120	-	-	-
1056	Main Support Building	Inmate Dining 3	24	23	4' Up Light Wall Mounted Fluorescent, (1) 48", Super T-8 lamp, Instant Start Ballast, NLO (BF: .85-.95) (No Diffuser)	24	12	Wall Mounted T8 LED Retrofit Lamp with External Driver LED 4' T8 Lamp (1) 12W Lamp			5824	0.56	0.29	3,280	1,661	-	GE 34235 LEDT8/LC/G/4/840	GE 21378 LED/DR/D2L/LW	-
1057	Main Support Building	Inmate Dining 3	21	116	Recessed Can 12" Recessed Metal Halide, (1) 100W lamp Prismatic Acrylic Diffuser	21	32	Recessed Chip On Board (COB) Type Screw-in / Bypass Existing Ballast Light Emitting Diode Lamp, Screw-in, (1) 36W lamp			5824	2.43	0.68	14,129	3,963	-	KEYSTONE KT-LED36HID-E26-840-D	-	-
1058	Main Support Building	Main Kitchen Open Area	80	116	4' Vapor Proof Surface Mounted Fluorescent, (2) 48", STD HO lamp Prismatic Acrylic Diffuser	80	44	Surface Mounted 4' Vapor Proof LED Light Fixture. (1) 44W			8760	9.24	3.48	80,956	30,527	FEM L48 6000LM LPPFL MD MVOLT GZ10 40K 80CRI TRS	-	-	-
1059	Main Support Building	Main Kitchen Open Area	21	43	1'x4' Troffer Recessed Flanged Fluorescent, (2) 48", Super T-8 lamp, Instant Start Ballast, NLO (BF: .85-.95) Prismatic Acrylic Diffuser	21	24	Recessed Flanged T8 LED Retrofit Lamp with External Driver LED 4' T8 Lamp (2) 12W Lamps			5824	0.91	0.50	5,298	2,906	-	GE 34235 LEDT8/LC/G/4/840	GE 21378 LED/DR/D2L/LW	-
1060	Main Support Building	Dishwashing	7	116	4' Vapor Proof Surface Mounted Fluorescent, (2) 48", STD HO lamp Prismatic Acrylic Diffuser	7	44	Surface Mounted 4' Vapor Proof LED Light Fixture. (1) 44W			8760	0.81	0.30	7,084	2,671	FEM L48 6000LM LPPFL MD MVOLT GZ10 40K 80CRI TRS	-	-	-
1061	Main Support Building	Chemical Storage	1	43	4' Wraparound; Tamper-Proof Surface Mounted Fluorescent, (2) 48", Super T-8 lamp, Instant Start Ballast, NLO (BF: .85-.95) Prismatic Acrylic Diffuser	1	24	Surface Mounted T8 LED Retrofit Lamp with External Driver LED 4' T8 Lamp (2) 12W Lamps			1560	0.04	0.02	68	37	-	GE 34235 LEDT8/LC/G/4/840	GE 21378 LED/DR/D2L/LW	-
1062	Main Support Building	Custodial Equipment Supply	1	116	4' Vapor Proof Surface Mounted Fluorescent, (2) 48", STD HO lamp Prismatic Acrylic Diffuser	1	44	Surface Mounted 4' Vapor Proof LED Light Fixture. (1) 44W			1560	0.12	0.04	180	68	FEM L48 6000LM LPPFL MD MVOLT GZ10 40K 80CRI TRS	-	-	-
1063	Main Support Building	Penthouse Mechanical Room	14	48	4' Industrial Chain Mounted Fluorescent, (2) 48", Super T-8 lamp, Instant Start Ballast, NLO (BF: .85-.95) (No Diffuser)	14	24	Chain Mounted T8 LED Retrofit Lamp with External Driver LED 4' T8 Lamp (2) 12W Lamps			520	0.67	0.33	349	173	-	GE 34235 LEDT8/LC/G/4/840	GE 21378 LED/DR/D2L/LW	-
1064	Main Support Building	Penthouse Mechanical Room	2	43	4' Vanity Wall Mounted Fluorescent, (2) 48", Super T-8 lamp, Instant Start Ballast, NLO (BF: .85-.95) Frosted Glass Lens	2	24	Wall Mounted T8 LED Retrofit Lamp with External Driver LED 4' T8 Lamp (2) 12W Lamps			520	0.09	0.05	45	25	-	GE 34235 LEDT8/LC/G/4/840	GE 21378 LED/DR/D2L/LW	-
1065	Main Support Building	Penthouse Mechanical Room	1	19	Universal Face Exit Sign; White Surface Mounted Compact Fluorescent, twin, (2) 7W lamp (No Diffuser)	1	3	Surface Mounted Universal Face Exit Sign; White LED Light Fixture. (1) 3W			8760	0.02	0.00	166	26	TCP 22743 RD LED EXIT BBU WH HOUSING	-	-	-
1066	Main Support Building	Electrical Room 4.002	4	48	4' Industrial Chain Mounted Fluorescent, (2) 48", Super T-8 lamp, Instant Start Ballast, NLO (BF: .85-.95) (No Diffuser)	4	24	Chain Mounted T8 LED Retrofit Lamp with External Driver LED 4' T8 Lamp (2) 12W Lamps			520	0.19	0.10	100	49	-	GE 34235 LEDT8/LC/G/4/840	GE 21378 LED/DR/D2L/LW	-
1067	Main Support Building	Bakery	14	116	4' Vapor Proof Surface Mounted Fluorescent, (2) 48", STD HO lamp Prismatic Acrylic Diffuser	14	44	Surface Mounted 4' Vapor Proof LED Light Fixture. (1) 44W			5824	1.62	0.61	9,419	3,552	FEM L48 6000LM LPPFL MD MVOLT GZ10 40K 80CRI TRS	-	-	-
1068	Main Support Building	Bakery	2	43	1'x4' Troffer Recessed Flanged Fluorescent, (2) 48", Super T-8 lamp, Instant Start Ballast, NLO (BF: .85-.95) Prismatic Acrylic Diffuser	2	24	Recessed Flanged T8 LED Retrofit Lamp with External Driver LED 4' T8 Lamp (2) 12W Lamps			1560	0.09	0.05	135	74	-	GE 34235 LEDT8/LC/G/4/840	GE 21378 LED/DR/D2L/LW	-
1069	Main Support Building	Bakery Equipment Room	2	116	4' Vapor Proof Chain Mounted Fluorescent, (2) 48", STD HO lamp Prismatic Acrylic Diffuser	2	44	Chain Mounted 4' Vapor Proof LED Light Fixture. (1) 44W			1560	0.23	0.09	360	136	FEM L48 6000LM LPPFL MD MVOLT GZ10 40K 80CRI TRS	-	-	-
1070	Main Support Building	Bakery Cooler	3	57	Jelly Jar Surface Mounted Incandescent, (1) 60W lamp Glass Jelly Jar	3	12	Surface Mounted Jelly Jar LED Light Fixture. (1) 12W			1560	0.17	0.04	267	56	ECONOLITE E-VTB01A-CM501G	-	-	-
1071	Main Support Building	Serving Line One	6	65	2'x4' Troffer Recessed Flanged Fluorescent, (3) 48", Super T-8 lamp, Instant Start Ballast, NLO (BF: .85-.95) Prismatic Acrylic Diffuser	6	36	Recessed Flanged T8 LED Retrofit Lamp with External Driver LED 4' T8 Lamp (3) 12W Lamps			5824	0.39	0.21	2,271	1,245	-	GE 34235 LEDT8/LC/G/4/840	GE 21379 LED/DR/D4L/LW	-
1072	Main Support Building	Managers Office	6	65	2'x4' Troffer Recessed Fluorescent, (3) 48", Super T-8 lamp, Instant Start Ballast, NLO (BF: .85-.95) Prismatic Acrylic Diffuser	6	26	Recessed 2'x4' Troffer LED Light Fixture. (1) 26W		1	4368	0.39	0.15	2,271	899	GE LPL24B04XMM840VQLTW	-	-	-
1073	Main Support Building	Supervisors Office	2	65	2'x4' Troffer Recessed Fluorescent, (3) 48", Super T-8 lamp, Instant Start Ballast, NLO (BF: .85-.95) Prismatic Acrylic Diffuser	2	26	Recessed 2'x4' Troffer LED Light Fixture. (1) 26W			5824	0.13	0.05	757	300	GE LPL24B04XMM840VQLTW	-	-	-
1074	Main Support Building	Secure Kitchen Equipment	2	116	4' Vapor Proof Chain Mounted Fluorescent, (2) 48", STD HO lamp Prismatic Acrylic Diffuser	2	44	Chain Mounted 4' Vapor Proof LED Light Fixture. (1) 44W			1560	0.23	0.09	360	136	FEM L48 6000LM LPPFL MD MVOLT GZ10 40K 80CRI TRS	-	-	-
1075	Main Support Building	Tray Rack Storage	4	116	4' Vapor Proof Surface Mounted Fluorescent, (2) 48", STD HO lamp Prismatic Acrylic Diffuser	4	44	Surface Mounted 4' Vapor Proof LED Light Fixture. (1) 44W			1560	0.46	0.17	721	272	FEM L48 6000LM LPPFL MD MVOLT GZ10 40K 80CRI TRS	-	-	-
1076	Main Support Building	Tray Rack Storage	1	19	Universal Face Exit Sign; Black Surface Mounted Compact Fluorescent, twin, (2) 7W lamp (No Diffuser)	1	2	Surface Mounted Upgrade EXIT Sign LED Light Fixture. (1) 2W			8760	0.02	0.00	166	17	-	TCP 20716 RD LED PADDLE RETRO HARDWIRE	-	-
1077	Main Support Building	Food Prep	5	65	2'x4' Troffer Recessed Fluorescent, (3) 48", Super T-8 lamp, Instant Start Ballast, NLO (BF: .85-.95) Prismatic Acrylic Diffuser	5	26	Recessed 2'x4' Troffer LED Light Fixture. (1) 26W			5824	0.32	0.13	1,892	750	GE LPL24B04XMM840VQLTW	-	-	-
1078	Main Support Building	Food Prep	4	43	1'x4' Troffer Recessed Flanged Fluorescent, (2) 48", Super T-8 lamp, Instant Start Ballast, NLO (BF: .85-.95) Prismatic Acrylic Diffuser	4	24	Recessed Flanged T8 LED Retrofit Lamp with External Driver LED 4' T8 Lamp (2) 12W Lamps			5824	0.17	0.10	1,009	554	-	GE 34235 LEDT8/LC/G/4/840	GE 21378 LED/DR/D2L/LW	-
1079	Main Support Building	Ice Machine Room	2	116	4' Vapor Proof Surface Mounted Fluorescent, (2) 48", STD HO lamp Prismatic Acrylic Diffuser	2	44	Surface Mounted 4' Vapor Proof LED Light Fixture. (1) 44W			8760	0.23	0.09	2,024	763	FEM L48 6000LM LPPFL MD MVOLT GZ10 40K 80CRI TRS	-	-	-
1080	Main Support Building	Locker Room Area	2	116	4' Vapor Proof Surface Mounted Fluorescent, (2) 48", STD HO lamp Prismatic Acrylic Diffuser	2	44	Surface Mounted 4' Vapor Proof LED Light Fixture. (1) 44W			8760	0.23	0.09	2,024	763	FEM L48 6000LM LPPFL MD MVOLT GZ10 40K 80CRI TRS	-	-	-
1081	Main Support Building	Locker Room Area	1	87	4' Wraparound; Tamper-Proof Surface Mounted Fluorescent, (4) 48", Super T-8 lamp, Instant Start Ballast, NLO (BF: .85-.95) Prismatic Acrylic Diffuser	1	48	Surface Mounted T8 LED Retrofit Lamp with External Driver LED 4' T8 Lamp (4) 12W Lamps			8760	0.09	0.05	759	416	-	GE 34235 LEDT8/LC/G/4/840	GE 21379 LED/DR/D4L/LW	-
1082	Main Support Building	Kitchen Staff Locker Room	2	43	4' Wraparound; Tamper-Proof Surface Mounted Fluorescent, (2) 48", Super T-8 lamp, Instant Start Ballast, NLO (BF: .85-.95) Prismatic Acrylic Diffuser	2	24	Surface Mounted T8 LED Retrofit Lamp with External Driver LED 4' T8 Lamp (2) 12W Lamps			8760	0.09	0.05	759	416	-	GE 34235 LEDT8/LC/G/4/840	GE 21378 LED/DR/D2L/LW	-
1083	Main Support Building	Staff Restroom	1	43	4' Wraparound; Tamper-Proof Surface Mounted Fluorescent, (2) 48", Super T-8 lamp, Instant Start Ballast, NLO (BF: .85-.95) Prismatic Acrylic Diffuser	1	24	Surface Mounted T8 LED Retrofit Lamp with External Driver LED 4' T8 Lamp (2) 12W Lamps			8760	0.04	0.02	379	208	-	GE 34235 LEDT8/LC/G/4/840	GE 21378 LED/DR/D2L/LW	-
1084	Main Support Building	Inmate Restroom	1	43	4' Vapor Proof; Tamper-Proof Surface Mounted Fluorescent, (2) 48", Super T-8 lamp, Instant Start Ballast, NLO (BF: .85-.95) Prismatic Acrylic Diffuser	1	24	Surface Mounted T8 LED Retrofit Lamp with External Driver LED 4' T8 Lamp (2) 12W Lamps			5824	0.04	0.02	252	138	-	GE 34235 LEDT8/LC/G/4/840	GE 21378 LED/DR/D2L/LW	-
1085	Main Support Building	Inmate Restroom	1	43	4' Wraparound; Tamper-Proof Surface Mounted Fluorescent, (2) 48", Super T-8 lamp, Instant Start Ballast, NLO (BF: .85-.95) Prismatic Acrylic Diffuser	1	24	Surface Mounted T8 LED Retrofit Lamp with External Driver LED 4' T8 Lamp (2) 12W Lamps			5824	0.04	0.02	252	138	-	GE 34235 LEDT8/LC/G/4/840	GE 21378 LED/DR/D2L/LW	-
1086	Main Support Building	Cooler / Prep Corridor	7	116	4' Vapor Proof Surface Mounted Fluorescent, (2) 48", STD HO lamp Prismatic Acrylic Diffuser	7	44	Surface Mounted 4' Vapor Proof LED Light Fixture. (1) 44W			5824	0.81	0.30	4,710	1,776	FEM L48 6000LM LPPFL MD MVOLT GZ10 40K 80CRI TRS	-	-	-
1087	Main Support Building	Cooler / Prep Corridor	1	3	Universal Face Exit Sign; Black Surface Mounted EXIT C172Light Emitting Diode, (2) 1.5W lamp, Dual Sided (No Diffuser)	1	3	Existing luminaire to remain as is No Retrofit. To remain as is.			8760	0.00	0.00	25	25	-	-	-	-
1088	Main Support Building	Meat Prep Room	8	116	4' Vapor Proof Surface Mounted Fluorescent, (2) 48", STD HO lamp Prismatic Acrylic Diffuser	8	44	Surface Mounted 4' Vapor Proof LED Light Fixture. (1) 44W			5824	0.92	0.35	5,382	2,030	FEM L48 6000LM LPPFL MD MVOLT GZ10 40K 80CRI TRS	-	-	-
1089	Main Support Building	Veg Prep Room	8	116	4' Vapor Proof Surface Mounted Fluorescent, (2) 48", STD HO lamp Prismatic Acrylic Diffuser	8	44	Surface Mounted 4' Vapor Proof LED Light Fixture. (1) 44W			5824	0.92	0.35	5,382	2,030	FEM L48 6000LM LPPFL MD MVOLT GZ10 40K 80CRI TRS	-	-	-
1090	Main Support Building	Dairy Cooler	4	10	Jelly Jar Surface Mounted Light Emitting Diode Lamp, Screw-in, (1) 12W lamp Glass Jelly Jar	4	12	Surface Mounted Jelly Jar LED Light Fixture. (1) 12W			5824	0.04	0.05	239	277	ECONOLITE E-VTB01A-CM501G	-	-	-
1091	Main Support Building	Dairy Cooler	2	57	Jelly Jar Surface Mounted Incandescent, (1) 60W lamp Glass Jelly Jar	2	12	Surface Mounted Jelly Jar LED Light Fixture. (1) 12W			5824	0.11	0.02	664	138	ECONOLITE E-VTB01A-CM501G	-	-	-

Line #	Facility Area	Space	Pre Fixture Qty	Pre Watts/ Fixt	Pre Description	Post Fixture Qty	Post Watt/ Fixt	Post Description	Wallswitch Sensor	Ceiling Sensor	Hours of Operation	Base kW	Proposed kW	Base kWh	Proposed kWh	Luminaire Part #	Lamp Part #	Driver Part#	Misc. Parts
1092	Main Support Building	Veggie Cooler	4	10	Jelly Jar Surface Mounted Light Emitting Diode Lamp, Screw-in, (1) 12W lamp Glass Jelly Jar	4	12	Surface Mounted Jelly Jar LED Light Fixture. (1) 12W			5824	0.04	0.05	239	277	ECONOLITE E-VTB01A-CM501G	-	-	-
1093	Main Support Building	Veggie Cooler	1	57	Jelly Jar Surface Mounted Incandescent, (1) 60W lamp Glass Jelly Jar	1	12	Surface Mounted Jelly Jar LED Light Fixture. (1) 12W			5824	0.06	0.01	332	69	ECONOLITE E-VTB01A-CM501G	-	-	-
1094	Main Support Building	Meat Cooler	4	10	Jelly Jar Surface Mounted Light Emitting Diode Lamp, Screw-in, (1) 12W lamp Glass Jelly Jar	4	12	Surface Mounted Jelly Jar LED Light Fixture. (1) 12W			5824	0.04	0.05	239	277	ECONOLITE E-VTB01A-CM501G	-	-	-
1095	Main Support Building	Meat Cooler	1	57	Jelly Jar Surface Mounted Incandescent, (1) 60W lamp Glass Jelly Jar	1	12	Surface Mounted Jelly Jar LED Light Fixture. (1) 12W			5824	0.06	0.01	332	69	ECONOLITE E-VTB01A-CM501G	-	-	-
1096	Main Support Building	Meat Cooler	2	232	8' Vapor Proof Surface Mounted Fluorescent, (2) 96", STD HO lamp Prismatic Acrylic Diffuser	2	64	Surface Mounted 8' Vapor Proof LED Light Fixture. (1) 65W			5824	0.46	0.13	2,702	750	FEM L96 9000LM LPPFL MD MVOLT GZ10 40K 80CRI TRS MEZ105299	-	-	-
1097	Main Support Building	Custodial Equipment	2	116	4' Vapor Proof Surface Mounted Fluorescent, (2) 48", STD HO lamp Prismatic Acrylic Diffuser	2	44	Surface Mounted 4' Vapor Proof LED Light Fixture. (1) 44W			5824	0.23	0.09	1,346	507	FEM L48 6000LM LPPFL MD MVOLT GZ10 40K 80CRI TRS	-	-	-
1098	Main Support Building	Potato Cooler	4	57	Jelly Jar Surface Mounted Incandescent, (1) 60W lamp Glass Jelly Jar	4	12	Surface Mounted Jelly Jar LED Light Fixture. (1) 12W			5824	0.23	0.05	1,328	277	ECONOLITE E-VTB01A-CM501G	-	-	-
1099	Main Support Building	Paper Products	3	116	4' Vapor Proof Chain Mounted Fluorescent, (2) 48", STD HO lamp Prismatic Acrylic Diffuser	3	44	Chain Mounted 4' Vapor Proof LED Light Fixture. (1) 44W			1560	0.35	0.13	541	204	FEM L48 6000LM LPPFL MD MVOLT GZ10 40K 80CRI TRS	-	-	-
1100	Main Support Building	Dry Goods Storage	9	116	4' Vapor Proof Chain Mounted Fluorescent, (2) 48", STD HO lamp Prismatic Acrylic Diffuser	9	44	Chain Mounted 4' Vapor Proof LED Light Fixture. (1) 44W			1560	1.04	0.39	1,622	612	FEM L48 6000LM LPPFL MD MVOLT GZ10 40K 80CRI TRS	-	-	-
1101	Main Support Building	Dry Goods Storage	1	3	Universal Face Exit Sign; Black Surface Mounted EXIT C172Light Emitting Diode, (2) 1.5W lamp, Dual Sided (No Diffuser)	1	3	Existing luminaire to remain as is No Retrofit. To remain as is.			8760	0.00	0.00	25	25	-	-	-	-
1102	Main Support Building	Secure Storage	2	116	4' Vapor Proof Chain Mounted Fluorescent, (2) 48", STD HO lamp Prismatic Acrylic Diffuser	2	44	Chain Mounted 4' Vapor Proof LED Light Fixture. (1) 44W			1560	0.23	0.09	360	136	FEM L48 6000LM LPPFL MD MVOLT GZ10 40K 80CRI TRS	-	-	-
1103	Main Support Building	Receiving	9	43	4' Wraparound; Tamper-Proof Surface Mounted Fluorescent, (2) 48", Super T-8 lamp, Instant Start Ballast, NLO (BF: .85-.95) (No Diffuser)	9	24	Surface Mounted T8 LED Retrofit Lamp with External Driver LED 4' T8 Lamp (2) 12W Lamps			8760	0.39	0.21	3,415	1,873	-	GE 34235 LEDT8/LC/G/4/840	GE 21378 LED/DR/D2L/LW	-
1104	Main Support Building	Receiving	1	43	4' Wraparound; Tamper-Proof Surface Mounted Fluorescent, (2) 48", Super T-8 lamp, Instant Start Ballast, NLO (BF: .85-.95) (No Diffuser)	1	24	Surface Mounted T8 LED Retrofit Lamp with External Driver LED 4' T8 Lamp (2) 12W Lamps			200	0.04	0.02	9	5	-	GE 34235 LEDT8/LC/G/4/840	GE 21378 LED/DR/D2L/LW	-
1105	Main Support Building	Serving Line 2	6	65	2'x4' Troffer Recessed Flanged Fluorescent, (3) 48", Super T-8 lamp, Instant Start Ballast, NLO (BF: .85-.95) Prismatic Acrylic Diffuser	6	36	Recessed Flanged T8 LED Retrofit Lamp with External Driver LED 4' T8 Lamp (3) 12W Lamps			5824	0.39	0.21	2,271	1,245	-	GE 34235 LEDT8/LC/G/4/840	GE 21379 LED/DR/D4L/LW	-
1106	Main Support Building	Mop Closet	1	116	4' Vapor Proof Surface Mounted Fluorescent, (2) 48", STD HO lamp Prismatic Acrylic Diffuser	1	44	Surface Mounted 4' Vapor Proof LED Light Fixture. (1) 44W			5824	0.12	0.04	673	254	FEM L48 6000LM LPPFL MD MVOLT GZ10 40K 80CRI TRS	-	-	-
1107	Main Support Building	Serving Line 3	6	65	2'x4' Troffer Recessed Flanged Fluorescent, (3) 48", Super T-8 lamp, Instant Start Ballast, NLO (BF: .85-.95) Prismatic Acrylic Diffuser	6	36	Recessed Flanged T8 LED Retrofit Lamp with External Driver LED 4' T8 Lamp (3) 12W Lamps			5824	0.39	0.21	2,271	1,245	-	GE 34235 LEDT8/LC/G/4/840	GE 21379 LED/DR/D4L/LW	-
1108	Main Support Building	Custodial Equipment Supply	2	43	4' Wraparound; Tamper-Proof Chain Mounted Fluorescent, (2) 48", Super T-8 lamp, Instant Start Ballast, NLO (BF: .85-.95) Prismatic Acrylic Diffuser	2	24	Chain Mounted T8 LED Retrofit Lamp with External Driver LED 4' T8 Lamp (2) 12W Lamps			1560	0.09	0.05	135	74	-	GE 34235 LEDT8/LC/G/4/840	GE 21378 LED/DR/D2L/LW	-
1109	Main Support Building	Chemical Storage	1	43	4' Wraparound; Tamper-Proof Surface Mounted Fluorescent, (2) 48", Super T-8 lamp, Instant Start Ballast, NLO (BF: .85-.95) Prismatic Acrylic Diffuser	1	24	Surface Mounted T8 LED Retrofit Lamp with External Driver LED 4' T8 Lamp (2) 12W Lamps			1560	0.04	0.02	68	37	-	GE 34235 LEDT8/LC/G/4/840	GE 21378 LED/DR/D2L/LW	-
1110	Main Support Building	Dishwashing	6	116	4' Vapor Proof Surface Mounted Fluorescent, (2) 48", STD HO lamp Prismatic Acrylic Diffuser	6	44	Surface Mounted 4' Vapor Proof LED Light Fixture. (1) 44W			5824	0.69	0.26	4,037	1,522	FEM L48 6000LM LPPFL MD MVOLT GZ10 40K 80CRI TRS	-	-	-
1111	Main Support Building	Penthouse Mechanical Room	14	48	4' Industrial Chain Mounted Fluorescent, (2) 48", Super T-8 lamp, Instant Start Ballast, NLO (BF: .85-.95) (No Diffuser)	14	24	Chain Mounted T8 LED Retrofit Lamp with External Driver LED 4' T8 Lamp (2) 12W Lamps			520	0.67	0.33	349	173	-	GE 34235 LEDT8/LC/G/4/840	GE 21378 LED/DR/D2L/LW	-
1112	Main Support Building	Penthouse Mechanical Room	2	43	4' Vanity Wall Mounted Fluorescent, (2) 48", Super T-8 lamp, Instant Start Ballast, NLO (BF: .85-.95) Frosted Glass Lens	2	24	Wall Mounted T8 LED Retrofit Lamp with External Driver LED 4' T8 Lamp (2) 12W Lamps			520	0.09	0.05	45	25	-	GE 34235 LEDT8/LC/G/4/840	GE 21378 LED/DR/D2L/LW	-
1113	Main Support Building	Penthouse Mechanical Room	1	19	Universal Face Exit Sign; White Surface Mounted Compact Fluorescent, twin, (2) 7W lamp (No Diffuser)	1	3	Surface Mounted Universal Face Exit Sign; White LED Light Fixture. (1) 3W			8760	0.02	0.00	166	26	TCP 22743 RD LED EXIT BBU WH HOUSING	-	-	-
1114	Main Support Building	Electrical Room 4.002	4	48	4' Industrial Chain Mounted Fluorescent, (2) 48", Super T-8 lamp, Instant Start Ballast, NLO (BF: .85-.95) (No Diffuser)	4	24	Chain Mounted T8 LED Retrofit Lamp with External Driver LED 4' T8 Lamp (2) 12W Lamps			520	0.19	0.10	100	49	-	GE 34235 LEDT8/LC/G/4/840	GE 21378 LED/DR/D2L/LW	-
1115	Main Support Building	Laundry Open	40	48	4' Industrial Chain Mounted Fluorescent, (2) 48", Super T-8 lamp, Instant Start Ballast, NLO (BF: .85-.95) (No Diffuser)	40	24	Chain Mounted T8 LED Retrofit Lamp with External Driver LED 4' T8 Lamp (2) 12W Lamps			8760	1.92	0.95	16,819	8,326	-	GE 34235 LEDT8/LC/G/4/840	GE 21378 LED/DR/D2L/LW	-
1116	Main Support Building	Laundry Open	3	43	4' Wraparound; Tamper-Proof Surface Mounted Fluorescent, (2) 48", Super T-8 lamp, Instant Start Ballast, NLO (BF: .85-.95) Prismatic Acrylic Diffuser	3	24	Surface Mounted T8 LED Retrofit Lamp with External Driver LED 4' T8 Lamp (2) 12W Lamps			8760	0.13	0.07	1,138	624	-	GE 34235 LEDT8/LC/G/4/840	GE 21378 LED/DR/D2L/LW	-
1117	Main Support Building	Laundry Open	2	3	Universal Face Exit Sign; Black Surface Mounted EXIT C172Light Emitting Diode, (2) 1.5W lamp, Dual Sided (No Diffuser)	2	3	Existing luminaire to remain as is No Retrofit. To remain as is.			8760	0.01	0.01	49	49	-	-	-	-
1118	Main Support Building	Inmate Restroom	1	43	4' Wraparound; Tamper-Proof Surface Mounted Fluorescent, (2) 48", Super T-8 lamp, Instant Start Ballast, NLO (BF: .85-.95) Prismatic Acrylic Diffuser	1	24	Surface Mounted T8 LED Retrofit Lamp with External Driver LED 4' T8 Lamp (2) 12W Lamps	1		1092	0.04	0.02	63	35	-	GE 34235 LEDT8/LC/G/4/840	GE 21378 LED/DR/D2L/LW	-
1119	Main Support Building	Staff Restroom	1	43	4' Wraparound; Tamper-Proof Surface Mounted Fluorescent, (2) 48", Super T-8 lamp, Instant Start Ballast, NLO (BF: .85-.95) Prismatic Acrylic Diffuser	1	24	Surface Mounted T8 LED Retrofit Lamp with External Driver LED 4' T8 Lamp (2) 12W Lamps	1		1092	0.04	0.02	63	35	-	GE 34235 LEDT8/LC/G/4/840	GE 21378 LED/DR/D2L/LW	-
1120	Main Support Building	Laundry Que	1	43	2'x4' Troffer Recessed Flanged Fluorescent, (2) 48", Super T-8 lamp, Instant Start Ballast, NLO (BF: .85-.95) Prismatic Acrylic Diffuser	1	24	Recessed Flanged T8 LED Retrofit Lamp with External Driver LED 4' T8 Lamp (2) 12W Lamps			3640	0.04	0.02	158	86	-	GE 34235 LEDT8/LC/G/4/840	GE 21378 LED/DR/D2L/LW	-
1121	Main Support Building	Laundry Que	1	3	Universal Face Exit Sign; Black Surface Mounted EXIT C172Light Emitting Diode, (2) 1.5W lamp, Dual Sided (No Diffuser)	1	3	Existing luminaire to remain as is No Retrofit. To remain as is.			8760	0.00	0.00	25	25	-	-	-	-
1122	Main Support Building	Laundry Office	2	65	2'x4' Troffer Recessed Fluorescent, (3) 48", Super T-8 lamp, Instant Start Ballast, NLO (BF: .85-.95) Prismatic Acrylic Diffuser	2	26	Recessed 2'x4' Troffer LED Light Fixture. (1) 26W		1	2730	0.13	0.05	473	187	GE LPL24B04XMM840VQLTW	-	-	-
1123	Main Support Building	Tool Room	1	48	4' Industrial Chain Mounted Fluorescent, (2) 48", Super T-8 lamp, Instant Start Ballast, NLO (BF: .85-.95) (No Diffuser)	1	24	Chain Mounted T8 LED Retrofit Lamp with External Driver LED 4' T8 Lamp (2) 12W Lamps		1	390	0.05	0.02	25	12	-	GE 34235 LEDT8/LC/G/4/840	GE 21378 LED/DR/D2L/LW	-
1124	Main Support Building	Chemical Storage	1	43	4' Wraparound; Tamper-Proof Surface Mounted Fluorescent, (2) 48", Super T-8 lamp, Instant Start Ballast, NLO (BF: .85-.95) Prismatic Acrylic Diffuser	1	24	Surface Mounted T8 LED Retrofit Lamp with External Driver LED 4' T8 Lamp (2) 12W Lamps	1		390	0.04	0.02	23	12	-	GE 34235 LEDT8/LC/G/4/840	GE 21378 LED/DR/D2L/LW	-
1125	Main Support Building	Commissary Que	2	71	Recessed Can 12" Recessed LED Light Fixture. (1) 75W Prismatic Acrylic Diffuser	2	71	Existing luminaire to remain as is No Retrofit. To remain as is.			3640	0.14	0.14	514	514	-	-	-	-
1126	Main Support Building	Commissary Que	2	116	Recessed Can 12" Recessed Metal Halide, (1) 100W lamp Prismatic Acrylic Diffuser	2	32	Recessed Chip On Board (COB) Type Screw-in / Bypass Existing Ballast Light Emitting Diode Lamp, Screw-in, (1) 36W lamp			3640	0.23	0.06	841	236	-	KEYSTONE KT-LED36HID-E26-840-D	-	-
1127	Main Support Building	Commissary Que	1	87	2'x4' Troffer Recessed Fluorescent, (4) 48", Super T-8 lamp, Instant Start Ballast, NLO (BF: .85-.95) Prismatic Acrylic Diffuser	1	26	Recessed 2'x4' Troffer LED Light Fixture. (1) 26W			3640	0.09	0.03	315	94	GE LPL24B04XMM840VQLTW	-	-	-
1128	Main Support Building	Commissary Que	1	3	Universal Face Exit Sign; Black Surface Mounted EXIT C172Light Emitting Diode, (2) 1.5W lamp, Dual Sided (No Diffuser)	1	3	Existing luminaire to remain as is No Retrofit. To remain as is.			8760	0.00	0.00	25	25	-	-	-	-
1129	Main Support Building	Commissary Open Area	19	48	4' Industrial Chain Mounted Fluorescent, (2) 48", Super T-8 lamp, Instant Start Ballast, NLO (BF: .85-.95) (No Diffuser)	19	24	Chain Mounted T8 LED Retrofit Lamp with External Driver LED 4' T8 Lamp (2) 12W Lamps			3640	0.91	0.45	3,320	1,643	-	GE 34235 LEDT8/LC/G/4/840	GE 21378 LED/DR/D2L/LW	-
1130	Main Support Building	Commissary Open Area	3	65	2'x4' Troffer Recessed Flanged Fluorescent, (3) 48", Super T-8 lamp, Instant Start Ballast, NLO (BF: .85-.95) Deep Cell Parabolic Diffuser	3	36	Recessed Flanged T8 LED Retrofit Lamp with External Driver LED 4' T8 Lamp (3) 12W Lamps			3640	0.19	0.11	710	389	-	GE 34235 LEDT8/LC/G/4/840	GE 21379 LED/DR/D4L/LW	-

Line #	Facility Area	Space	Pre Fixture Qty	Pre Watts/ Fixt	Pre Description	Post Fixture Qty	Post Watt/ Fixt	Post Description	Wallswitch Sensor	Ceiling Sensor	Hours of Operation	Base kW	Proposed kW	Base kWh	Proposed kWh	Luminaire Part #	Lamp Part #	Driver Part#	Misc. Parts
1131	Main Support Building	Commissary Open Area	1	116	4' Vapor Proof Surface Mounted Fluorescent, (2) 48", STD HO lamp Prismatic Acrylic Diffuser	1	44	Surface Mounted 4' Vapor Proof LED Light Fixture. (1) 44W			3640	0.12	0.04	420	159	FEM L48 6000LM LPPFL MD MVOLT GZ10 40K 80CRI TRS	-	-	-
1132	Main Support Building	Commissary Open Area	2	3	Universal Face Exit Sign; Black Surface Mounted EXIT C172Light Emitting Diode, (2) 1.5W lamp, Dual Sided (No Diffuser)	2	3	Existing luminaire to remain as is No Retrofit. To remain as is.			8760	0.01	0.01	49	49	-	-	-	-
1133	Main Support Building	Secure Storage 5.108	1	43	4' Wraparound; Tamper-Proof Surface Mounted Fluorescent, (2) 48", Super T-8 lamp, Instant Start Ballast, NLO (BF: .85-.95) Prismatic Acrylic Diffuser	1	24	Surface Mounted T8 LED Retrofit Lamp with External Driver LED 4' T8 Lamp (2) 12W Lamps	1		390	0.04	0.02	23	12	-	GE 34235 LEDT8/LC/G/4/840	GE 21378 LED/DR/D2L/LW	-
1134	Main Support Building	Commissary Office	1	65	2'x4' Troffer Recessed Fluorescent, (3) 48", Super T-8 lamp, Instant Start Ballast, NLO (BF: .85-.95) Prismatic Acrylic Diffuser	1	26	Recessed 2'x4' Troffer LED Light Fixture. (1) 26W	1		2730	0.06	0.03	237	94	GE LPL24B04XMM840VQLTW	-	-	-
1135	Main Support Building	Inmate Restroom 5.109	1	43	4' Wraparound; Tamper-Proof Surface Mounted Fluorescent, (2) 48", Super T-8 lamp, Instant Start Ballast, NLO (BF: .85-.95) Prismatic Acrylic Diffuser	1	24	Surface Mounted T8 LED Retrofit Lamp with External Driver LED 4' T8 Lamp (2) 12W Lamps	1		1092	0.04	0.02	63	35	-	GE 34235 LEDT8/LC/G/4/840	GE 21378 LED/DR/D2L/LW	-
1136	Main Support Building	Staff Restroom 5.107	1	43	4' Wraparound; Tamper-Proof Surface Mounted Fluorescent, (2) 48", Super T-8 lamp, Instant Start Ballast, NLO (BF: .85-.95) Prismatic Acrylic Diffuser	1	24	Surface Mounted T8 LED Retrofit Lamp with External Driver LED 4' T8 Lamp (2) 12W Lamps	1		1092	0.04	0.02	63	35	-	GE 34235 LEDT8/LC/G/4/840	GE 21378 LED/DR/D2L/LW	-
1137	Main Support Building	Commissary Receiving	2	48	4' Industrial Chain Mounted Fluorescent, (2) 48", Super T-8 lamp, Instant Start Ballast, NLO (BF: .85-.95) (No Diffuser)	2	24	Chain Mounted T8 LED Retrofit Lamp with External Driver LED 4' T8 Lamp (2) 12W Lamps	1		2730	0.10	0.05	349	173	-	GE 34235 LEDT8/LC/G/4/840	GE 21378 LED/DR/D2L/LW	-
1138	Main Support Building	Maintenance Que	2	71	Recessed Can 12" Recessed LED Light Fixture. (1) 75W Prismatic Acrylic Diffuser	2	71	Existing luminaire to remain as is No Retrofit. To remain as is. - HIGH			8760	0.14	0.14	1,236	1,236	-	-	-	-
1139	Main Support Building	Maintenance Que	1	3	Universal Face Exit Sign; Black Surface Mounted EXIT C172Light Emitting Diode, (2) 1.5W lamp, Dual Sided (No Diffuser)	1	3	Existing luminaire to remain as is No Retrofit. To remain as is.			8760	0.00	0.00	25	25	-	-	-	-
1140	Main Support Building	Custodial Equipment	2	43	4' Wraparound; Tamper-Proof Surface Mounted Fluorescent, (2) 48", Super T-8 lamp, Instant Start Ballast, NLO (BF: .85-.95) Prismatic Acrylic Diffuser	2	24	Surface Mounted T8 LED Retrofit Lamp with External Driver LED 4' T8 Lamp (2) 12W Lamps	1		1170	0.09	0.05	135	74	-	GE 34235 LEDT8/LC/G/4/840	GE 21378 LED/DR/D2L/LW	-
1141	Main Support Building	Maintenance Corridor	7	48	4' Industrial Chain Mounted Fluorescent, (2) 48", Super T-8 lamp, Instant Start Ballast, NLO (BF: .85-.95) (No Diffuser)	7	24	Chain Mounted T8 LED Retrofit Lamp with External Driver LED 4' T8 Lamp (2) 12W Lamps			3640	0.34	0.17	1,223	605	-	GE 34235 LEDT8/LC/G/4/840	GE 21378 LED/DR/D2L/LW	-
1142	Main Support Building	Maintenance Corridor	2	3	Universal Face Exit Sign; Black Surface Mounted EXIT C172Light Emitting Diode, (2) 1.5W lamp, Dual Sided (No Diffuser)	2	3	Existing luminaire to remain as is No Retrofit. To remain as is.			8760	0.01	0.01	49	49	-	-	-	-
1143	Main Support Building	Carpentry Dept	12	48	4' Industrial Chain Mounted Fluorescent, (2) 48", Super T-8 lamp, Instant Start Ballast, NLO (BF: .85-.95) (No Diffuser)	12	24	Chain Mounted T8 LED Retrofit Lamp with External Driver LED 4' T8 Lamp (2) 12W Lamps			3640	0.58	0.29	2,097	1,038	-	GE 34235 LEDT8/LC/G/4/840	GE 21378 LED/DR/D2L/LW	-
1144	Main Support Building	Carpentry Tool Room	2	48	4' Industrial Chain Mounted Fluorescent, (2) 48", Super T-8 lamp, Instant Start Ballast, NLO (BF: .85-.95) (No Diffuser)	2	24	Chain Mounted T8 LED Retrofit Lamp with External Driver LED 4' T8 Lamp (2) 12W Lamps			1560	0.10	0.05	150	74	-	GE 34235 LEDT8/LC/G/4/840	GE 21378 LED/DR/D2L/LW	-
1145	Main Support Building	Machine Shop	12	48	4' Industrial Chain Mounted Fluorescent, (2) 48", Super T-8 lamp, Instant Start Ballast, NLO (BF: .85-.95) (No Diffuser)	12	24	Chain Mounted T8 LED Retrofit Lamp with External Driver LED 4' T8 Lamp (2) 12W Lamps			3640	0.58	0.29	2,097	1,038	-	GE 34235 LEDT8/LC/G/4/840	GE 21378 LED/DR/D2L/LW	-
1146	Main Support Building	Machine Shop Tool Room	2	48	4' Industrial Chain Mounted Fluorescent, (2) 48", Super T-8 lamp, Instant Start Ballast, NLO (BF: .85-.95) (No Diffuser)	2	24	Chain Mounted T8 LED Retrofit Lamp with External Driver LED 4' T8 Lamp (2) 12W Lamps			1560	0.10	0.05	150	74	-	GE 34235 LEDT8/LC/G/4/840	GE 21378 LED/DR/D2L/LW	-
1147	Main Support Building	Machine Shop Tool Room	1	43	4' Wraparound; Tamper-Proof Wall Mounted Fluorescent, (2) 48", Super T-8 lamp, Instant Start Ballast, NLO (BF: .85-.95) Prismatic Acrylic Diffuser	1	24	Wall Mounted T8 LED Retrofit Lamp with External Driver LED 4' T8 Lamp (2) 12W Lamps			1560	0.04	0.02	68	37	-	GE 34235 LEDT8/LC/G/4/840	GE 21378 LED/DR/D2L/LW	-
1148	Main Support Building	Paint Shop	6	48	4' Industrial Chain Mounted Fluorescent, (2) 48", Super T-8 lamp, Instant Start Ballast, NLO (BF: .85-.95) (No Diffuser)	6	24	Chain Mounted T8 LED Retrofit Lamp with External Driver LED 4' T8 Lamp (2) 12W Lamps			3640	0.29	0.14	1,048	519	-	GE 34235 LEDT8/LC/G/4/840	GE 21378 LED/DR/D2L/LW	-
1149	Main Support Building	Paint Shop	2	43	4' Wraparound Chain Mounted Fluorescent, (2) 48", Super T-8 lamp, Instant Start Ballast, NLO (BF: .85-.95) Prismatic Acrylic Diffuser	2	24	Chain Mounted T8 LED Retrofit Lamp with External Driver LED 4' T8 Lamp (2) 12W Lamps			3640	0.09	0.05	315	173	-	GE 34235 LEDT8/LC/G/4/840	GE 21378 LED/DR/D2L/LW	-
1150	Main Support Building	Paint Shop Tool Room	2	48	4' Industrial Surface Mounted Fluorescent, (2) 48", Super T-8 lamp, Instant Start Ballast, NLO (BF: .85-.95) (No Diffuser)	2	24	Surface Mounted T8 LED Retrofit Lamp with External Driver LED 4' T8 Lamp (2) 12W Lamps			1560	0.10	0.05	150	74	-	GE 34235 LEDT8/LC/G/4/840	GE 21378 LED/DR/D2L/LW	-
1151	Main Support Building	Inmate Restroom	1	43	4' Wraparound; Tamper-Proof Surface Mounted Fluorescent, (2) 48", Super T-8 lamp, Instant Start Ballast, NLO (BF: .85-.95) Prismatic Acrylic Diffuser	1	24	Surface Mounted T8 LED Retrofit Lamp with External Driver LED 4' T8 Lamp (2) 12W Lamps	1		1092	0.04	0.02	63	35	-	GE 34235 LEDT8/LC/G/4/840	GE 21378 LED/DR/D2L/LW	-
1152	Main Support Building	Staff Restroom	1	43	4' Wraparound; Tamper-Proof Surface Mounted Fluorescent, (2) 48", Super T-8 lamp, Instant Start Ballast, NLO (BF: .85-.95) Prismatic Acrylic Diffuser	1	24	Surface Mounted T8 LED Retrofit Lamp with External Driver LED 4' T8 Lamp (2) 12W Lamps	1		1092	0.04	0.02	63	35	-	GE 34235 LEDT8/LC/G/4/840	GE 21378 LED/DR/D2L/LW	-
1153	Main Support Building	HVAC Dept	6	48	4' Industrial Chain Mounted Fluorescent, (2) 48", Super T-8 lamp, Instant Start Ballast, NLO (BF: .85-.95) (No Diffuser)	6	24	Chain Mounted T8 LED Retrofit Lamp with External Driver LED 4' T8 Lamp (2) 12W Lamps			3640	0.29	0.14	1,048	519	-	GE 34235 LEDT8/LC/G/4/840	GE 21378 LED/DR/D2L/LW	-
1154	Main Support Building	HVAC Tool Room	2	48	4' Industrial Surface Mounted Fluorescent, (2) 48", Super T-8 lamp, Instant Start Ballast, NLO (BF: .85-.95) (No Diffuser)	2	24	Surface Mounted T8 LED Retrofit Lamp with External Driver LED 4' T8 Lamp (2) 12W Lamps			1560	0.10	0.05	150	74	-	GE 34235 LEDT8/LC/G/4/840	GE 21378 LED/DR/D2L/LW	-
1155	Main Support Building	Plumbing Shop	6	48	4' Industrial Chain Mounted Fluorescent, (2) 48", Super T-8 lamp, Instant Start Ballast, NLO (BF: .85-.95) (No Diffuser)	6	24	Chain Mounted T8 LED Retrofit Lamp with External Driver LED 4' T8 Lamp (2) 12W Lamps			3640	0.29	0.14	1,048	519	-	GE 34235 LEDT8/LC/G/4/840	GE 21378 LED/DR/D2L/LW	-
1156	Main Support Building	Plumbing ShopTool Room	2	48	4' Industrial Surface Mounted Fluorescent, (2) 48", Super T-8 lamp, Instant Start Ballast, NLO (BF: .85-.95) (No Diffuser)	2	24	Surface Mounted T8 LED Retrofit Lamp with External Driver LED 4' T8 Lamp (2) 12W Lamps			1560	0.10	0.05	150	74	-	GE 34235 LEDT8/LC/G/4/840	GE 21378 LED/DR/D2L/LW	-
1157	Main Support Building	Electric Shop	6	48	4' Industrial Chain Mounted Fluorescent, (2) 48", Super T-8 lamp, Instant Start Ballast, NLO (BF: .85-.95) (No Diffuser)	6	24	Chain Mounted T8 LED Retrofit Lamp with External Driver LED 4' T8 Lamp (2) 12W Lamps			3640	0.29	0.14	1,048	519	-	GE 34235 LEDT8/LC/G/4/840	GE 21378 LED/DR/D2L/LW	-
1158	Main Support Building	Electric shop Tool Room	2	48	4' Industrial Surface Mounted Fluorescent, (2) 48", Super T-8 lamp, Instant Start Ballast, NLO (BF: .85-.95) (No Diffuser)	2	24	Surface Mounted T8 LED Retrofit Lamp with External Driver LED 4' T8 Lamp (2) 12W Lamps			1560	0.10	0.05	150	74	-	GE 34235 LEDT8/LC/G/4/840	GE 21378 LED/DR/D2L/LW	-
1159	Main Support Building	Electric shop Tool Room	2	53	2'x2' Troffer Recessed Fluorescent, (2) U-Tube, T-8 lamp, Instant Start Ballast Prismatic Acrylic Diffuser	2	20	Recessed 2'x2' Troffer LED Light Fixture. (1) 20W			1560	0.11	0.04	166	62	GE LPL22B03XMM840VQLTW	-	-	-
1160	Main Support Building	Penthouse Mechanical	14	48	4' Industrial Chain Mounted Fluorescent, (2) 48", Super T-8 lamp, Instant Start Ballast, NLO (BF: .85-.95) (No Diffuser)	14	24	Chain Mounted T8 LED Retrofit Lamp with External Driver LED 4' T8 Lamp (2) 12W Lamps			520	0.67	0.33	349	173	-	GE 34235 LEDT8/LC/G/4/840	GE 21378 LED/DR/D2L/LW	-
1161	Main Support Building	Penthouse Mechanical	2	43	4' Vanity Wall Mounted Fluorescent, (2) 48", Super T-8 lamp, Instant Start Ballast, NLO (BF: .85-.95) Frosted Glass Lens	2	24	Wall Mounted T8 LED Retrofit Lamp with External Driver LED 4' T8 Lamp (2) 12W Lamps			520	0.09	0.05	45	25	-	GE 34235 LEDT8/LC/G/4/840	GE 21378 LED/DR/D2L/LW	-
1162	Main Support Building	Penthouse Mechanical	1	19	Universal Face Exit Sign; White Surface Mounted Compact Fluorescent, twin, (2) 7W lamp (No Diffuser)	1	3	Surface Mounted Universal Face Exit Sign; White LED Light Fixture. (1) 3W			8760	0.02	0.00	166	26	TCP 22743 RD LED EXIT BBU WH HOUSING	-	-	-
1163	Main Support Building	Exterior Pump Room 5.001	12	48	4' Industrial Chain Mounted Fluorescent, (2) 48", Super T-8 lamp, Instant Start Ballast, NLO (BF: .85-.95) (No Diffuser)	12	24	Chain Mounted T8 LED Retrofit Lamp with External Driver LED 4' T8 Lamp (2) 12W Lamps			1560	0.58	0.29	899	445	-	GE 34235 LEDT8/LC/G/4/840	GE 21378 LED/DR/D2L/LW	-
1164	Main Support Building	Mechanical Equipment Room 5.003	1	48	4' Industrial Chain Mounted Fluorescent, (2) 48", Super T-8 lamp, Instant Start Ballast, NLO (BF: .85-.95) (No Diffuser)	1	24	Chain Mounted T8 LED Retrofit Lamp with External Driver LED 4' T8 Lamp (2) 12W Lamps			520	0.05	0.02	25	12	-	GE 34235 LEDT8/LC/G/4/840	GE 21378 LED/DR/D2L/LW	-
1165	Main Support Building	High Voltage	11	48	4' Industrial Chain Mounted Fluorescent, (2) 48", Super T-8 lamp, Instant Start Ballast, NLO (BF: .85-.95) (No Diffuser)	11	24	Chain Mounted T8 LED Retrofit Lamp with External Driver LED 4' T8 Lamp (2) 12W Lamps			520	0.53	0.26	275	136	-	GE 34235 LEDT8/LC/G/4/840	GE 21378 LED/DR/D2L/LW	-
1166	Main Support Building	Maintenance Office Corridor / Open	2	65	2'x4' Troffer Recessed Fluorescent, (3) 48", Super T-8 lamp, Instant Start Ballast, NLO (BF: .85-.95) Prismatic Acrylic Diffuser	2	26	Recessed 2'x4' Troffer LED Light Fixture. (1) 26W		1	2730	0.13	0.05	473	187	GE LPL24B04XMM840VQLTW	-	-	-
1167	Main Support Building	Maintenance Office Corridor / Open	1	65	2'x4' Troffer Recessed Fluorescent, (3) 48", Super T-8 lamp, Instant Start Ballast, NLO (BF: .85-.95) Microcell Diffuser	1	26	Recessed 2'x4' Troffer LED Light Fixture. (1) 26W			3640	0.06	0.03	237	94	GE LPL24B04XMM840VQLTW	-	-	-
1168	Main Support Building	Office	3	65	2'x4' Dimmable Recessed Troffer Recessed Fluorescent, (3) 48", Super T-8 lamp, Instant Start Ballast, NLO (BF: .85-.95) Microcell Diffuser	3	26	Recessed 2'x4' Troffer LED Light Fixture. (1) 26W		1	2730	0.19	0.08	710	281	GE LPL24B04XMM840VQLTW	-	-	-
1169	Main Support Building	Office	2	65	2'x4' Dimmable Recessed Troffer Recessed Fluorescent, (3) 48", Super T-8 lamp, Instant Start Ballast, NLO (BF: .85-.95) Microcell Diffuser	2	26	Recessed 2'x4' Troffer LED Light Fixture. (1) 26W		1	2730	0.13	0.05	473	187	GE LPL24B04XMM840VQLTW	-	-	-

Line #	Facility Area	Space	Pre Fixture Qty	Pre Watts/ Fixt	Pre Description	Post Fixture Qty	Post Watt/ Fixt	Post Description	Wallswitch Sensor	Ceiling Sensor	Hours of Operation	Base kW	Proposed kW	Base kWh	Proposed kWh	Luminaire Part #	Lamp Part #	Driver Part#	Misc. Parts
1170	Main Support Building	Staff Restroom	1	43	4' Wraparound; Tamper-Proof Surface Mounted Fluorescent, (2) 48", Super T-8 lamp, Instant Start Ballast, NLO (BF: .85-.95) Prismatic Acrylic Diffuser	1	24	Surface Mounted T8 LED Retrofit Lamp with External Driver LED 4' T8 Lamp (2) 12W Lamps	1		1092	0.04	0.02	63	35	-	GE 34235 LEDT8/LC/G/4/840	GE 21378 LED/DR/D2L/LW	-
1171	Main Support Building	FM1 Corridor	4	65	2'x4' Troffer Recessed Fluorescent, (3) 48", Super T-8 lamp, Instant Start Ballast, NLO (BF: .85-.95) Microcell Diffuser	4	26	Recessed 2'x4' Troffer LED Light Fixture. (1) 26W		1	2730	0.26	0.10	946	375	GE LPL24B04XMM840VQLTW	-	-	-
1172	Main Support Building	MR Side Maintenance	65	48	4' Industrial Chain Mounted Fluorescent, (2) 48", Super T-8 lamp, Instant Start Ballast, NLO (BF: .85-.95) (No Diffuser)	65	24	Chain Mounted T8 LED Retrofit Lamp with External Driver LED 4' T8 Lamp (2) 12W Lamps			8760	3.12	1.54	27,331	13,529	-	GE 34235 LEDT8/LC/G/4/840	GE 21378 LED/DR/D2L/LW	-
1173	Main Support Building	MR Side Maintenance	5	87	4' Wraparound; Tamper-Proof Chain Mounted Fluorescent, (4) 48", Super T-8 lamp, Instant Start Ballast, NLO (BF: .85-.95) Prismatic Acrylic Diffuser	5	48	Chain Mounted T8 LED Retrofit Lamp with External Driver LED 4' T8 Lamp (4) 12W Lamps			8760	0.43	0.24	3,795	2,081	-	GE 34235 LEDT8/LC/G/4/840	GE 21379 LED/DR/D4L/LW	-
1174	Main Support Building	MR Side Maintenance	2	43	4' Corner Mount Wall Vanity; Tamper-Proof Wall Mounted Fluorescent, (2) 48", Super T-8 lamp, Instant Start Ballast, NLO (BF: .85-.95) Prismatic Acrylic Diffuser	2	24	Wall Mounted T8 LED Retrofit Lamp with External Driver LED 4' T8 Lamp (2) 12W Lamps			8760	0.09	0.05	759	416	-	GE 34235 LEDT8/LC/G/4/840	GE 21378 LED/DR/D2L/LW	-
1175	Main Support Building	MR Side Maintenance	3	3	Universal Face Exit Sign; Black Surface Mounted EXIT C172Light Emitting Diode, (2) 1.5W lamp, Dual Sided (No Diffuser)	3	3	Existing luminaire to remain as is No Retrofit. To remain as is.			8760	0.01	0.01	74	74	-	-	-	-
1176	Main Support Building	Fire Safety Office	3	43	4' Wraparound; Tamper-Proof Surface Mounted Fluorescent, (2) 48", Super T-8 lamp, Instant Start Ballast, NLO (BF: .85-.95) (No Diffuser)	3	24	Surface Mounted T8 LED Retrofit Lamp with External Driver LED 4' T8 Lamp (2) 12W Lamps			3640	0.13	0.07	473	259	-	GE 34235 LEDT8/LC/G/4/840	GE 21378 LED/DR/D2L/LW	-
1177	Main Support Building	Inmate Restroom	3	43	4' Wraparound; Tamper-Proof Surface Mounted Fluorescent, (2) 48", Super T-8 lamp, Instant Start Ballast, NLO (BF: .85-.95) Prismatic Acrylic Diffuser	3	24	Surface Mounted T8 LED Retrofit Lamp with External Driver LED 4' T8 Lamp (2) 12W Lamps			6570	0.13	0.07	854	468	-	GE 34235 LEDT8/LC/G/4/840	GE 21378 LED/DR/D2L/LW	-
1178	Main Support Building	Staff Restroom	1	43	4' Wraparound; Tamper-Proof Surface Mounted Fluorescent, (2) 48", Super T-8 lamp, Instant Start Ballast, NLO (BF: .85-.95) Prismatic Acrylic Diffuser	1	24	Surface Mounted T8 LED Retrofit Lamp with External Driver LED 4' T8 Lamp (2) 12W Lamps			1456	0.04	0.02	63	35	-	GE 34235 LEDT8/LC/G/4/840	GE 21378 LED/DR/D2L/LW	-
1179	Main Support Building	Tool Control Officer	2	65	2'x4' Dimmable Recessed Troffer Recessed Fluorescent, (3) 48", Super T-8 lamp, Instant Start Ballast, NLO (BF: .85-.95) Prismatic Acrylic Diffuser	2	26	Recessed 2'x4' Troffer LED Light Fixture. (1) 26W			3640	0.13	0.05	473	187	GE LPL24B04XMM840VQLTW	-	-	-
1180	Main Support Building	Custodial Equipment Room	4	43	4' Wraparound; Tamper-Proof Surface Mounted Fluorescent, (2) 48", Super T-8 lamp, Instant Start Ballast, NLO (BF: .85-.95) Prismatic Acrylic Diffuser	4	24	Surface Mounted T8 LED Retrofit Lamp with External Driver LED 4' T8 Lamp (2) 12W Lamps			1560	0.17	0.10	270	148	-	GE 34235 LEDT8/LC/G/4/840	GE 21378 LED/DR/D2L/LW	-
1181	Main Support Building	CI Que	4	65	2'x4' Troffer Recessed Fluorescent, (3) 48", Super T-8 lamp, Instant Start Ballast, NLO (BF: .85-.95) Prismatic Acrylic Diffuser	4	26	Recessed 2'x4' Troffer LED Light Fixture. (1) 26W			6570	0.26	0.10	1,708	676	GE LPL24B04XMM840VQLTW	-	-	-
1182	Main Support Building	Search 6.107	2	43	4' Wraparound; Tamper-Proof Surface Mounted Fluorescent, (2) 48", Super T-8 lamp, Instant Start Ballast, NLO (BF: .85-.95) Prismatic Acrylic Diffuser	2	24	Surface Mounted T8 LED Retrofit Lamp with External Driver LED 4' T8 Lamp (2) 12W Lamps			520	0.09	0.05	45	25	-	GE 34235 LEDT8/LC/G/4/840	GE 21378 LED/DR/D2L/LW	-
1183	Main Support Building	Penthouse Mechanical 6.001	19	48	4' Industrial Chain Mounted Fluorescent, (2) 48", Super T-8 lamp, Instant Start Ballast, NLO (BF: .85-.95) (No Diffuser)	19	24	Chain Mounted T8 LED Retrofit Lamp with External Driver LED 4' T8 Lamp (2) 12W Lamps			520	0.91	0.45	474	235	-	GE 34235 LEDT8/LC/G/4/840	GE 21378 LED/DR/D2L/LW	-
1184	Main Support Building	Penthouse Mechanical 6.001	2	43	4' Vanity Wall Mounted Fluorescent, (2) 48", Super T-8 lamp, Instant Start Ballast, NLO (BF: .85-.95) Frosted Glass Lens	2	24	Wall Mounted T8 LED Retrofit Lamp with External Driver LED 4' T8 Lamp (2) 12W Lamps			520	0.09	0.05	45	25	-	GE 34235 LEDT8/LC/G/4/840	GE 21378 LED/DR/D2L/LW	-
1185	Main Support Building	Penthouse Mechanical 6.001	1	3	Universal Face Exit Sign; White Surface Mounted EXIT C172Light Emitting Diode, (2) 1.5W lamp, Dual Sided (No Diffuser)	1	3	Existing luminaire to remain as is No Retrofit. To remain as is.			8760	0.00	0.00	25	25	-	-	-	-
1186	Main Support Building	Electrical Room 6.002	4	48	4' Industrial Chain Mounted Fluorescent, (2) 48", Super T-8 lamp, Instant Start Ballast, NLO (BF: .85-.95) (No Diffuser)	4	24	Chain Mounted T8 LED Retrofit Lamp with External Driver LED 4' T8 Lamp (2) 12W Lamps			520	0.19	0.10	100	49	-	GE 34235 LEDT8/LC/G/4/840	GE 21378 LED/DR/D2L/LW	-
1187	Main Support Building	CI Corridor	8	43	2'x4' Troffer Recessed Fluorescent, (2) 48", Super T-8 lamp, Instant Start Ballast, NLO (BF: .85-.95) Prismatic Acrylic Diffuser	8	26	Recessed 2'x4' Troffer LED Light Fixture. (1) 26W			8760	0.35	0.21	3,036	1,804	GE LPL24B04XMM840VQLTW	-	-	-
1188	Main Support Building	CI Corridor	3	65	2'x4' Troffer Recessed Fluorescent, (3) 48", Super T-8 lamp, Instant Start Ballast, NLO (BF: .85-.95) Prismatic Acrylic Diffuser	3	26	Recessed 2'x4' Troffer LED Light Fixture. (1) 26W			8760	0.19	0.08	1,708	676	GE LPL24B04XMM840VQLTW	-	-	-
1189	Main Support Building	CI Corridor	5	48	4' Industrial Chain Mounted Fluorescent, (2) 48", Super T-8 lamp, Instant Start Ballast, NLO (BF: .85-.95) (No Diffuser)	5	24	Chain Mounted T8 LED Retrofit Lamp with External Driver LED 4' T8 Lamp (2) 12W Lamps			8760	0.24	0.12	2,102	1,041	-	GE 34235 LEDT8/LC/G/4/840	GE 21378 LED/DR/D2L/LW	-
1190	Main Support Building	Strip Search	5	48	4' Industrial Chain Mounted Fluorescent, (2) 48", Super T-8 lamp, Instant Start Ballast, NLO (BF: .85-.95) (No Diffuser)	5	24	Chain Mounted T8 LED Retrofit Lamp with External Driver LED 4' T8 Lamp (2) 12W Lamps			6570	0.24	0.12	1,577	781	-	GE 34235 LEDT8/LC/G/4/840	GE 21378 LED/DR/D2L/LW	-
1191	Main Support Building	Supply Room	3	48	4' Industrial Chain Mounted Fluorescent, (2) 48", Super T-8 lamp, Instant Start Ballast, NLO (BF: .85-.95) (No Diffuser)	3	24	Chain Mounted T8 LED Retrofit Lamp with External Driver LED 4' T8 Lamp (2) 12W Lamps			6570	0.14	0.07	946	468	-	GE 34235 LEDT8/LC/G/4/840	GE 21378 LED/DR/D2L/LW	-
1192	Main Support Building	Supply Room	1	3	Universal Face Exit Sign; Black Surface Mounted EXIT C172Light Emitting Diode, (2) 1.5W lamp, Dual Sided (No Diffuser)	1	3	Existing luminaire to remain as is No Retrofit. To remain as is.			8760	0.00	0.00	25	25	-	-	-	-
1193	Main Support Building	Custodial Closet 6.108	1	43	4' Wraparound; Tamper-Proof Surface Mounted Fluorescent, (2) 48", Super T-8 lamp, Instant Start Ballast, NLO (BF: .85-.95) Prismatic Acrylic Diffuser	1	24	Surface Mounted T8 LED Retrofit Lamp with External Driver LED 4' T8 Lamp (2) 12W Lamps			1560	0.04	0.02	68	37	-	GE 34235 LEDT8/LC/G/4/840	GE 21378 LED/DR/D2L/LW	-
1194	Main Support Building	Clerk Receiving 6.103	6	65	2'x4' Troffer Recessed Fluorescent, (3) 48", Super T-8 lamp, Instant Start Ballast, NLO (BF: .85-.95) Microcell Diffuser	6	26	Recessed 2'x4' Troffer LED Light Fixture. (1) 26W			3640	0.39	0.15	1,419	562	GE LPL24B04XMM840VQLTW	-	-	-
1195	Main Support Building	Staff Restroom 6.105	1	43	4' Wraparound; Tamper-Proof Surface Mounted Fluorescent, (2) 48", Super T-8 lamp, Instant Start Ballast, NLO (BF: .85-.95) Prismatic Acrylic Diffuser	1	24	Surface Mounted T8 LED Retrofit Lamp with External Driver LED 4' T8 Lamp (2) 12W Lamps			1456	0.04	0.02	63	35	-	GE 34235 LEDT8/LC/G/4/840	GE 21378 LED/DR/D2L/LW	-
1196	Main Support Building	Conference Room 6.104	4	65	2'x4' Troffer Recessed Fluorescent, (3) 48", Super T-8 lamp, Instant Start Ballast, NLO (BF: .85-.95) Prismatic Acrylic Diffuser	4	26	Recessed 2'x4' Troffer LED Light Fixture. (1) 26W			3640	0.26	0.10	946	375	GE LPL24B04XMM840VQLTW	-	-	-
1197	Main Support Building	Office 6.101	3	65	2'x4' Troffer Recessed Fluorescent, (3) 48", Super T-8 lamp, Instant Start Ballast, NLO (BF: .85-.95) Microcell Diffuser	3	26	Recessed 2'x4' Troffer LED Light Fixture. (1) 26W	1		2730	0.19	0.08	710	281	GE LPL24B04XMM840VQLTW	-	-	-
1198	Main Support Building	Office 6.102	2	65	2'x4' Troffer Recessed Fluorescent, (3) 48", Super T-8 lamp, Instant Start Ballast, NLO (BF: .85-.95) Microcell Diffuser	2	26	Recessed 2'x4' Troffer LED Light Fixture. (1) 26W			3640	0.13	0.05	473	187	GE LPL24B04XMM840VQLTW	-	-	-
1199	Main Support Building	Security Panel Room	1	43	4' Wraparound; Tamper-Proof Surface Mounted Fluorescent, (2) 48", Super T-8 lamp, Instant Start Ballast, NLO (BF: .85-.95) Prismatic Acrylic Diffuser	1	24	Surface Mounted T8 LED Retrofit Lamp with External Driver LED 4' T8 Lamp (2) 12W Lamps			520	0.04	0.02	23	12	-	GE 34235 LEDT8/LC/G/4/840	GE 21378 LED/DR/D2L/LW	-
1200	Main Support Building	Ci Overflow (connects to MR Side Maintenance)	16	48	4' Industrial Chain Mounted Fluorescent, (2) 48", Super T-8 lamp, Instant Start Ballast, NLO (BF: .85-.95) (No Diffuser)	16	24	Chain Mounted T8 LED Retrofit Lamp with External Driver LED 4' T8 Lamp (2) 12W Lamps			8760	0.77	0.38	6,728	3,330	-	GE 34235 LEDT8/LC/G/4/840	GE 21378 LED/DR/D2L/LW	-
1201	Main Support Building	CI Large Warehouse	166	48	4' Industrial Chain Mounted Fluorescent, (2) 48", Super T-8 lamp, Instant Start Ballast, NLO (BF: .85-.95) (No Diffuser)	166	24	Chain Mounted T8 LED Retrofit Lamp with External Driver LED 4' T8 Lamp (2) 12W Lamps - HIGH			8760	7.97	3.94	69,800	34,551	-	GE 34235 LEDT8/LC/G/4/840	GE 21378 LED/DR/D2L/LW	-
1202	Main Support Building	Inmate Restroom 6.204	3	43	4' Wraparound; Tamper-Proof Surface Mounted Fluorescent, (2) 48", Super T-8 lamp, Instant Start Ballast, NLO (BF: .85-.95) Prismatic Acrylic Diffuser	3	24	Surface Mounted T8 LED Retrofit Lamp with External Driver LED 4' T8 Lamp (2) 12W Lamps			6570	0.13	0.07	854	468	-	GE 34235 LEDT8/LC/G/4/840	GE 21378 LED/DR/D2L/LW	-
1203	Main Support Building	CI warehouse Office 6.205	2	65	2'x4' Troffer Recessed Fluorescent, (3) 48", Super T-8 lamp, Instant Start Ballast, NLO (BF: .85-.95) Prismatic Acrylic Diffuser	2	26	Recessed 2'x4' Troffer LED Light Fixture. (1) 26W			3640	0.13	0.05	473	187	GE LPL24B04XMM840VQLTW	-	-	-
1204	Main Support Building	Staff Restroom	1	43	4' Wraparound; Tamper-Proof Surface Mounted Fluorescent, (2) 48", Super T-8 lamp, Instant Start Ballast, NLO (BF: .85-.95) Prismatic Acrylic Diffuser	1	24	Surface Mounted T8 LED Retrofit Lamp with External Driver LED 4' T8 Lamp (2) 12W Lamps			1456	0.04	0.02	63	35	-	GE 34235 LEDT8/LC/G/4/840	GE 21378 LED/DR/D2L/LW	-
1205	Main Support Building	Issue Room (cool room)	2	87	4' Wraparound; Tamper-Proof Surface Mounted Fluorescent, (4) 48", Super T-8 lamp, Instant Start Ballast, NLO (BF: .85-.95) Prismatic Acrylic Diffuser	2	48	Surface Mounted T8 LED Retrofit Lamp with External Driver LED 4' T8 Lamp (4) 12W Lamps			8760	0.17	0.10	1,518	833	-	GE 34235 LEDT8/LC/G/4/840	GE 21379 LED/DR/D4L/LW	-
1206	Main Support Building	Issue Room (cool room)	2	87	4' Wraparound; Tamper-Proof Surface Mounted Fluorescent, (4) 48", Super T-8 lamp, Instant Start Ballast, NLO (BF: .85-.95) Prismatic Acrylic Diffuser	2	48	Surface Mounted T8 LED Retrofit Lamp with External Driver LED 4' T8 Lamp (4) 12W Lamps			8760	0.17	0.10	1,518	833	-	GE 34235 LEDT8/LC/G/4/840	GE 21379 LED/DR/D4L/LW	-
1207	Main Support Building	Loading Dock Receiving	6	125	Canopy Fixture Surface Mounted High Pressure Sodium, (1) 100W lamp Prismatic Acrylic Diffuser	6	51	Surface Mounted Canopy Fixture LED Light Fixture. (1) 52W - HIGH			8760	0.75	0.31	6,546	2,706	RAB VANLED40NW	-	-	-
1208	Main Support Building	Loading Dock	2	266	Low-Bay Surface Mounted Metal Halide, (1) 250W lamp Flat Glass Lens	4	44	Surface Mounted 4' Vapor Proof LED Light Fixture. (1) 44W - HIGH			8760	0.53	0.17	4,664	1,526	FEM L48 6000LM LPPFL MD MVOLT GZ10 40K 80CRI TRS	-	-	-

Line #	Facility Area	Space	Pre Fixture Qty	Pre Watts/ Fixt	Pre Description	Post Fixture Qty	Post Watt/ Fixt	Post Description	Wallswitch Sensor	Ceiling Sensor	Hours of Operation	Base kW	Proposed kW	Base kWh	Proposed kWh	Luminaire Part #	Lamp Part #	Driver Part#	Misc. Parts
1209	Main Support Building	Warehouse Overflow	17	48	4' Industrial Chain Mounted Fluorescent, (2) 48", Super T-8 lamp, Instant Start Ballast, NLO (BF: .85-.95) (No Diffuser)	17	24	Chain Mounted T8 LED Retrofit Lamp with External Driver LED 4' T8 Lamp (2) 12W Lamps			8760	0.82	0.40	7,148	3,538	-	GE 34235 LEDT8/LC/G/4/840	GE 21378 LED/DR/D2L/LW	-
1210	Sally Port Building	Sally Port Building	4	43	4' Wraparound; Tamper-Proof Surface Mounted Fluorescent, (2) 48", Super T-8 lamp, Instant Start Ballast, NLO (BF: .85-.95) Prismatic Acrylic Diffuser	4	24	Surface Mounted T8 LED Retrofit Lamp with External Driver LED 4' T8 Lamp (2) 12W Lamps			3640	0.17	0.10	631	346	-	GE 34235 LEDT8/LC/G/4/840	GE 21378 LED/DR/D2L/LW	-
1211	Sally Port Building	Sally Port Building	4	87	2'x4' Troffer Recessed Fluorescent, (4) 48", Super T-8 lamp, Instant Start Ballast, NLO (BF: .85-.95) Prismatic Acrylic Diffuser	4	26	Recessed 2'x4' Troffer LED Light Fixture. (1) 26W			3640	0.35	0.10	1,261	375	GE LPL24B04XMM840VQLTW	-	-	-
1212	Sally Port Building	Custodial Equipment	1	43	4' Wraparound; Tamper-Proof Surface Mounted Fluorescent, (2) 48", Super T-8 lamp, Instant Start Ballast, NLO (BF: .85-.95) Prismatic Acrylic Diffuser	1	24	Surface Mounted T8 LED Retrofit Lamp with External Driver LED 4' T8 Lamp (2) 12W Lamps	1		1170	0.04	0.02	68	37	-	GE 34235 LEDT8/LC/G/4/840	GE 21378 LED/DR/D2L/LW	-
1213	Sally Port Building	Hot Water Tank Room	1	87	2'x4' Troffer Recessed Fluorescent, (4) 48", Super T-8 lamp, Instant Start Ballast, NLO (BF: .85-.95) Prismatic Acrylic Diffuser	1	26	Recessed 2'x4' Troffer LED Light Fixture. (1) 26W			520	0.09	0.03	45	13	GE LPL24B04XMM840VQLTW	-	-	-
1214	Sally Port Building	Security Panel Closet 12.102	1	43	4' Wraparound; Tamper-Proof Surface Mounted Fluorescent, (2) 48", Super T-8 lamp, Instant Start Ballast, NLO (BF: .85-.95) Prismatic Acrylic Diffuser	1	24	Surface Mounted T8 LED Retrofit Lamp with External Driver LED 4' T8 Lamp (2) 12W Lamps			520	0.04	0.02	23	12	-	GE 34235 LEDT8/LC/G/4/840	GE 21378 LED/DR/D2L/LW	-
1215	Sally Port Building	Sally Port Armory	1	43	4' Wraparound; Tamper-Proof Surface Mounted Fluorescent, (2) 48", Super T-8 lamp, Instant Start Ballast, NLO (BF: .85-.95) Prismatic Acrylic Diffuser	1	24	Surface Mounted T8 LED Retrofit Lamp with External Driver LED 4' T8 Lamp (2) 12W Lamps			200	0.04	0.02	9	5	-	GE 34235 LEDT8/LC/G/4/840	GE 21378 LED/DR/D2L/LW	-
1216	Sally Port Building	Staff Restroom	1	43	4' Wraparound; Tamper-Proof Surface Mounted Fluorescent, (2) 48", Super T-8 lamp, Instant Start Ballast, NLO (BF: .85-.95) Prismatic Acrylic Diffuser	1	24	Surface Mounted T8 LED Retrofit Lamp with External Driver LED 4' T8 Lamp (2) 12W Lamps	1		1092	0.04	0.02	63	35	-	GE 34235 LEDT8/LC/G/4/840	GE 21378 LED/DR/D2L/LW	-
1217	Admin Building	Ramp tp Admin	16	43	2'x4' Troffer Recessed Fluorescent, (2) 48", Super T-8 lamp, Instant Start Ballast, NLO (BF: .85-.95) Prismatic Acrylic Diffuser	16	26	Recessed 2'x4' Troffer LED Light Fixture. (1) 26W			8760	0.69	0.41	6,072	3,608	GE LPL24B04XMM840VQLTW	-	-	-
1218	Admin Building	Ramp tp Admin	1	3	Universal Face Exit Sign; White Surface Mounted EXIT C172Light Emitting Diode, (2) 1.5W lamp, Dual Sided (No Diffuser)	1	3	Existing luminaire to remain as is No Retrofit. To remain as is.			8760	0.00	0.00	25	25	-	-	-	-
1219	Admin Building	Metal Detector Scanning Area	8	65	2'x4' Troffer Recessed Fluorescent, (3) 48", Super T-8 lamp, Instant Start Ballast, NLO (BF: .85-.95) Prismatic Acrylic Diffuser	8	26	Recessed 2'x4' Troffer LED Light Fixture. (1) 26W			8760	0.52	0.21	4,554	1,804	GE LPL24B04XMM840VQLTW	-	-	-
1220	Admin Building	Metal Detector Scanning Area	1	3	Universal Face Exit Sign; White Surface Mounted EXIT C172Light Emitting Diode, (2) 1.5W lamp, Dual Sided (No Diffuser)	1	3	Existing luminaire to remain as is No Retrofit. To remain as is.			8760	0.00	0.00	25	25	-	-	-	-
1221	Admin Building	Check In Desk	2	38	2'x4' Troffer Recessed LED Light Fixture. (1) 40W Frosted Glass Lens	2	38	Existing luminaire to remain as is No Retrofit. To remain as is.			3640	0.08	0.08	274	274	-	-	-	-
1222	Admin Building	Custodial Equipment Room 1.203	1	43	2'x4' Troffer Recessed Fluorescent, (2) 48", Super T-8 lamp, Instant Start Ballast, NLO (BF: .85-.95) Prismatic Acrylic Diffuser	1	26	Recessed 2'x4' Troffer LED Light Fixture. (1) 26W	1		2730	0.04	0.03	158	94	GE LPL24B04XMM840VQLTW	-	-	-
1223	Admin Building	Custodial Equipment Room 1.203	2	30	2' Wraparound; Tamper-Proof Surface Mounted Fluorescent, (2) 24", T-8 lamp, Instant Start Ballast, NLO (BF: .85-.95) Prismatic Acrylic Diffuser	2	16	Surface Mounted T8 LED Retrofit Lamp with External Driver LED 2' T8 Lamp (2) 8W Lamps			3640	0.06	0.03	217	115	-	GE 36409 LEDT8/LC/G/2/840	GE 21378 LED/DR/D2L/LW	-
1224	Admin Building	Staff Restroom	2	43	4' Wraparound; Tamper-Proof Surface Mounted Fluorescent, (2) 48", Super T-8 lamp, Instant Start Ballast, NLO (BF: .85-.95) Prismatic Acrylic Diffuser	2	24	Surface Mounted T8 LED Retrofit Lamp with External Driver LED 4' T8 Lamp (2) 12W Lamps	1		1092	0.09	0.05	126	69	-	GE 34235 LEDT8/LC/G/4/840	GE 21378 LED/DR/D2L/LW	-
1225	Admin Building	Custodial Closet	1	53	2'x2' Troffer Surface Mounted Fluorescent, (2) U-Tube, T-8 lamp, Instant Start Ballast Prismatic Acrylic Diffuser	1	24	Surface Mounted LED 2'x2' Troffer, Retrofit LED Light Fixture. (1) 24W			1560	0.05	0.02	83	37	SYLVANIA LED/TROFF/2L/024/UNV/D/8/40/22/ WH	-	-	-
1226	Admin Building	Visitor Restroom	1	43	4' Wraparound; Tamper-Proof Surface Mounted Fluorescent, (2) 48", Super T-8 lamp, Instant Start Ballast, NLO (BF: .85-.95) Prismatic Acrylic Diffuser	1	24	Surface Mounted T8 LED Retrofit Lamp with External Driver LED 4' T8 Lamp (2) 12W Lamps			1456	0.04	0.02	63	35	-	GE 34235 LEDT8/LC/G/4/840	GE 21378 LED/DR/D2L/LW	-
1227	Admin Building	Small Visit Room	1	43	4' Wraparound; Tamper-Proof Surface Mounted Fluorescent, (2) 48", Super T-8 lamp, Instant Start Ballast, NLO (BF: .85-.95) Prismatic Acrylic Diffuser	1	24	Surface Mounted T8 LED Retrofit Lamp with External Driver LED 4' T8 Lamp (2) 12W Lamps	1		1170	0.04	0.02	68	37	-	GE 34235 LEDT8/LC/G/4/840	GE 21378 LED/DR/D2L/LW	-
1228	Admin Building	Admin Corridor	1	65	2'x4' Troffer Recessed Fluorescent, (3) 48", Super T-8 lamp, Instant Start Ballast, NLO (BF: .85-.95) Prismatic Acrylic Diffuser	1	26	Recessed 2'x4' Troffer LED Light Fixture. (1) 26W			6570	0.06	0.03	427	169	GE LPL24B04XMM840VQLTW	-	-	-
1229	Admin Building	Admin Corridor	10	43	2'x4' Troffer Recessed Fluorescent, (2) 48", Super T-8 lamp, Instant Start Ballast, NLO (BF: .85-.95) Prismatic Acrylic Diffuser	10	26	Recessed 2'x4' Troffer LED Light Fixture. (1) 26W			6570	0.43	0.26	2,846	1,691	GE LPL24B04XMM840VQLTW	-	-	-
1230	Admin Building	Admin Corridor	3	3	Universal Face Exit Sign; White Surface Mounted EXIT C172Light Emitting Diode, (2) 1.5W lamp, Dual Sided (No Diffuser)	3	3	Existing luminaire to remain as is No Retrofit. To remain as is.			8760	0.01	0.01	74	74	-	-	-	-
1231	Admin Building	Armory Sally	1	65	2'x4' Troffer Recessed Fluorescent, (3) 48", Super T-8 lamp, Instant Start Ballast, NLO (BF: .85-.95) Prismatic Acrylic Diffuser	1	26	Recessed 2'x4' Troffer LED Light Fixture. (1) 26W			8760	0.06	0.03	569	225	GE LPL24B04XMM840VQLTW	-	-	-
1232	Admin Building	Locksmith Room	3	65	2'x4' Troffer Recessed Fluorescent, (3) 48", Super T-8 lamp, Instant Start Ballast, NLO (BF: .85-.95) Prismatic Acrylic Diffuser	3	26	Recessed 2'x4' Troffer LED Light Fixture. (1) 26W			1560	0.19	0.08	304	120	GE LPL24B04XMM840VQLTW	-	-	-
1233	Admin Building	Armory	4	65	2'x4' Troffer Recessed Fluorescent, (3) 48", Super T-8 lamp, Instant Start Ballast, NLO (BF: .85-.95) Prismatic Acrylic Diffuser	4	26	Recessed 2'x4' Troffer LED Light Fixture. (1) 26W			1560	0.26	0.10	405	161	GE LPL24B04XMM840VQLTW	-	-	-
1234	Admin Building	Armory	1	87	2'x4' Troffer Recessed Fluorescent, (4) 48", Super T-8 lamp, Instant Start Ballast, NLO (BF: .85-.95) Prismatic Acrylic Diffuser	1	26	Recessed 2'x4' Troffer LED Light Fixture. (1) 26W			1560	0.09	0.03	135	40	GE LPL24B04XMM840VQLTW	-	-	-
1235	Admin Building	Armory	1	57	Jelly Jar Surface Mounted Incandescent, (1) 60W lamp Glass Jelly Jar	1	12	Surface Mounted Jelly Jar LED Light Fixture. (1) 12W			200	0.06	0.01	11	2	ECONOLITE E-VTB01A-CM501G	-	-	-
1236	Admin Building	Penthouse Mechanical	9	43	4' Industrial Chain Mounted Fluorescent, (2) 48", Super T-8 lamp, Instant Start Ballast, NLO (BF: .85-.95) (No Diffuser)	9	24	Chain Mounted T8 LED Retrofit Lamp with External Driver LED 4' T8 Lamp (2) 12W Lamps			520	0.39	0.21	203	111	-	GE 34235 LEDT8/LC/G/4/840	GE 21378 LED/DR/D2L/LW	-
1237	Admin Building	Penthouse Mechanical	2	43	4' Vanity Wall Mounted Fluorescent, (2) 48", Super T-8 lamp, Instant Start Ballast, NLO (BF: .85-.95) Frosted Glass Lens	2	24	Wall Mounted T8 LED Retrofit Lamp with External Driver LED 4' T8 Lamp (2) 12W Lamps			520	0.09	0.05	45	25	-	GE 34235 LEDT8/LC/G/4/840	GE 21378 LED/DR/D2L/LW	-
1238	Admin Building	Penthouse Mechanical	1	19	Universal Face Exit Sign; White Surface Mounted Compact Fluorescent, twin, (2) 7W lamp (No Diffuser)	1	3	Surface Mounted Universal Face Exit Sign; White LED Light Fixture. (1) 3W			8760	0.02	0.00	166	26	TCP 22743 RD LED EXIT BBU WH HOUSING	-	-	-
1239	Admin Building	Telephone Room 1.004	1	43	4' Industrial Chain Mounted Fluorescent, (2) 48", Super T-8 lamp, Instant Start Ballast, NLO (BF: .85-.95) (No Diffuser)	1	24	Chain Mounted T8 LED Retrofit Lamp with External Driver LED 4' T8 Lamp (2) 12W Lamps			520	0.04	0.02	23	12	-	GE 34235 LEDT8/LC/G/4/840	GE 21378 LED/DR/D2L/LW	-
1240	Admin Building	Electrical Room 1.003 (inmate phone control room	2	43	4' Industrial Chain Mounted Fluorescent, (2) 48", Super T-8 lamp, Instant Start Ballast, NLO (BF: .85-.95) (No Diffuser)	2	24	Chain Mounted T8 LED Retrofit Lamp with External Driver LED 4' T8 Lamp (2) 12W Lamps			3640	0.09	0.05	315	173	-	GE 34235 LEDT8/LC/G/4/840	GE 21378 LED/DR/D2L/LW	-
1241	Admin Building	Weight Room 1.411	8	65	2'x4' Troffer Recessed Fluorescent, (3) 48", Super T-8 lamp, Instant Start Ballast, NLO (BF: .85-.95) Prismatic Acrylic Diffuser	8	26	Recessed 2'x4' Troffer LED Light Fixture. (1) 26W			6570	0.52	0.21	3,415	1,353	GE LPL24B04XMM840VQLTW	-	-	-
1242	Admin Building	Womens Locker1.410	1	43	2'x4' Troffer Recessed Fluorescent, (2) 48", Super T-8 lamp, Instant Start Ballast, NLO (BF: .85-.95) Prismatic Acrylic Diffuser	1	26	Recessed 2'x4' Troffer LED Light Fixture. (1) 26W			8760	0.04	0.03	379	225	GE LPL24B04XMM840VQLTW	-	-	-
1243	Admin Building	Womens Locker1.410	8	43	4' Wraparound; Tamper-Proof Surface Mounted Fluorescent, (2) 48", Super T-8 lamp, Instant Start Ballast, NLO (BF: .85-.95) Prismatic Acrylic Diffuser	8	24	Surface Mounted T8 LED Retrofit Lamp with External Driver LED 4' T8 Lamp (2) 12W Lamps			6570	0.35	0.19	2,277	1,249	-	GE 34235 LEDT8/LC/G/4/840	GE 21378 LED/DR/D2L/LW	-
1244	Admin Building	Womens Locker1.410	2	43	4' Vapor Proof Surface Mounted Fluorescent, (2) 48", Super T-8 lamp, Instant Start Ballast, NLO (BF: .85-.95) Prismatic Acrylic Diffuser	2	24	Surface Mounted T8 LED Retrofit Lamp with External Driver LED 4' T8 Lamp (2) 12W Lamps			8760	0.09	0.05	759	416	-	GE 34235 LEDT8/LC/G/4/840	GE 21378 LED/DR/D2L/LW	-
1245	Admin Building	Womens Locker1.410	4	28	Recessed Can 5" Recessed Compact Fluorescent, quad, (2) 13W lamp Prismatic Acrylic Diffuser	4	14	Recessed Install LED Plug-in Lamp; Bypass and Remove Existing Ballast. Light Emitting Diode Lamp, Screw-in, (2) 8W lamp			1560	0.11	0.06	175	90	-	Hylite HL-OB-8W-G24-40K	-	-
1246	Admin Building	Mens Locker1.410	1	65	2'x4' Troffer Recessed Fluorescent, (3) 48", Super T-8 lamp, Instant Start Ballast, NLO (BF: .85-.95) Prismatic Acrylic Diffuser	1	26	Recessed 2'x4' Troffer LED Light Fixture. (1) 26W			8760	0.06	0.03	569	225	GE LPL24B04XMM840VQLTW	-	-	-
1247	Admin Building	Mens Locker1.410	27	43	4' Wraparound; Tamper-Proof Surface Mounted Fluorescent, (2) 48", Super T-8 lamp, Instant Start Ballast, NLO (BF: .85-.95) Prismatic Acrylic Diffuser	27	24	Surface Mounted T8 LED Retrofit Lamp with External Driver LED 4' T8 Lamp (2) 12W Lamps			6570	1.17	0.64	7,685	4,215	-	GE 34235 LEDT8/LC/G/4/840	GE 21378 LED/DR/D2L/LW	-

Line #	Facility Area	Space	Pre Fixture Qty	Pre Watts/ Fixt	Pre Description	Post Fixture Qty	Post Watt/ Fixt	Post Description	Wallswitch Sensor	Ceiling Sensor	Hours of Operation	Base kW	Proposed kW	Base kWh	Proposed kWh	Luminaire Part #	Lamp Part #	Driver Part#	Misc. Parts
1248	Admin Building	Mens Locker1.410	2	43	4' Vapor Proof Surface Mounted Fluorescent, (2) 48", Super T-8 lamp, Instant Start Ballast, NLO (BF: .85-.95) Prismatic Acrylic Diffuser	2	24	Surface Mounted T8 LED Retrofit Lamp with External Driver LED 4' T8 Lamp (2) 12W Lamps			8760	0.09	0.05	759	416	-	GE 34235 LEDT8/LC/G/4/840	GE 21378 LED/DR/D2L/LW	-
1249	Admin Building	Mens Locker1.410	5	28	Recessed Can 5" Recessed Compact Fluorescent, quad, (2) 13W lamp Prismatic Acrylic Diffuser	5	14	Recessed Install LED Plug-in Lamp; Bypass and Remove Existing Ballast. Light Emitting Diode Lamp, Screw-in, (2) 8W lamp			1560	0.14	0.07	218	112	-	Hylite HL-OB-8W-G24-40K	-	-
1250	Admin Building	Inmate Records	12	65	2'x4' Troffer Recessed Fluorescent, (3) 48", Super T-8 lamp, Instant Start Ballast, NLO (BF: .85-.95) Prismatic Acrylic Diffuser	12	26	Recessed 2'x4' Troffer LED Light Fixture. (1) 26W			3640	0.78	0.31	2,838	1,124	GE LPL24B04XMM840VQLTW	-	-	-
1251	Admin Building	Inmate Records	2	87	2'x4' Troffer Recessed Fluorescent, (4) 48", Super T-8 lamp, Instant Start Ballast, NLO (BF: .85-.95) Prismatic Acrylic Diffuser	2	26	Recessed 2'x4' Troffer LED Light Fixture. (1) 26W			3640	0.17	0.05	631	187	GE LPL24B04XMM840VQLTW	-	-	-
1252	Admin Building	Back File Room	2	65	2'x4' Troffer Recessed Fluorescent, (3) 48", Super T-8 lamp, Instant Start Ballast, NLO (BF: .85-.95) Prismatic Acrylic Diffuser	2	26	Recessed 2'x4' Troffer LED Light Fixture. (1) 26W			3640	0.13	0.05	473	187	GE LPL24B04XMM840VQLTW	-	-	-
1253	Admin Building	Back File Room	2	87	4' Wraparound; Tamper-Proof Surface Mounted Fluorescent, (4) 48", Super T-8 lamp, Instant Start Ballast, NLO (BF: .85-.95) Prismatic Acrylic Diffuser	2	48	Surface Mounted T8 LED Retrofit Lamp with External Driver LED 4' T8 Lamp (4) 12W Lamps			3640	0.17	0.10	631	346	-	GE 34235 LEDT8/LC/G/4/840	GE 21379 LED/DR/D4L/LW	-
1254	Admin Building	Office	1	65	2'x4' Troffer Recessed Fluorescent, (3) 48", Super T-8 lamp, Instant Start Ballast, NLO (BF: .85-.95) Prismatic Acrylic Diffuser	1	26	Recessed 2'x4' Troffer LED Light Fixture. (1) 26W			3640	0.06	0.03	237	94	GE LPL24B04XMM840VQLTW	-	-	-
1255	Admin Building	Training Room 1.404	4	65	2'x4' Troffer Recessed Fluorescent, (3) 48", Super T-8 lamp, Instant Start Ballast, NLO (BF: .85-.95) Prismatic Acrylic Diffuser	4	26	Recessed 2'x4' Troffer LED Light Fixture. (1) 26W			3640	0.26	0.10	946	375	GE LPL24B04XMM840VQLTW	-	-	-
1256	Admin Building	Training Room 1.404	2	87	4' Wraparound; Tamper-Proof Surface Mounted Fluorescent, (4) 48", Super T-8 lamp, Instant Start Ballast, NLO (BF: .85-.95) Prismatic Acrylic Diffuser	2	48	Surface Mounted T8 LED Retrofit Lamp with External Driver LED 4' T8 Lamp (4) 12W Lamps			1560	0.17	0.10	270	148	-	GE 34235 LEDT8/LC/G/4/840	GE 21379 LED/DR/D4L/LW	-
1257	Admin Building	Training Office	2	65	2'x4' Troffer Recessed Fluorescent, (3) 48", Super T-8 lamp, Instant Start Ballast, NLO (BF: .85-.95) Prismatic Acrylic Diffuser	2	26	Recessed 2'x4' Troffer LED Light Fixture. (1) 26W	1		2730	0.13	0.05	473	187	GE LPL24B04XMM840VQLTW	-	-	-
1258	Admin Building	Back Training	2	43	4' Wraparound; Tamper-Proof Surface Mounted Fluorescent, (2) 48", Super T-8 lamp, Instant Start Ballast, NLO (BF: .85-.95) Prismatic Acrylic Diffuser	2	24	Surface Mounted T8 LED Retrofit Lamp with External Driver LED 4' T8 Lamp (2) 12W Lamps	1		2730	0.09	0.05	315	173	-	GE 34235 LEDT8/LC/G/4/840	GE 21378 LED/DR/D2L/LW	-
1259	Admin Building	Security Closet 1.408	1	43	2'x4' Troffer Recessed Flanged Fluorescent, (2) 48", Super T-8 lamp, Instant Start Ballast, NLO (BF: .85-.95) Prismatic Acrylic Diffuser	1	24	Recessed Flanged T8 LED Retrofit Lamp with External Driver LED 4' T8 Lamp (2) 12W Lamps			200	0.04	0.02	9	5	-	GE 34235 LEDT8/LC/G/4/840	GE 21378 LED/DR/D2L/LW	-
1260	Admin Building	Incident Manager Office 1.412	1	65	2'x4' Troffer Recessed Fluorescent, (3) 48", Super T-8 lamp, Instant Start Ballast, NLO (BF: .85-.95) Prismatic Acrylic Diffuser	1	26	Recessed 2'x4' Troffer LED Light Fixture. (1) 26W	1		2730	0.06	0.03	237	94	GE LPL24B04XMM840VQLTW	-	-	-
1261	Admin Building	Staff Lounge 1.407	5	65	2'x4' Troffer Recessed Fluorescent, (3) 48", Super T-8 lamp, Instant Start Ballast, NLO (BF: .85-.95) Prismatic Acrylic Diffuser	5	26	Recessed 2'x4' Troffer LED Light Fixture. (1) 26W			8760	0.32	0.13	2,846	1,127	GE LPL24B04XMM840VQLTW	-	-	-
1262	Admin Building	Mail Room	8	65	2'x4' Troffer Recessed Fluorescent, (3) 48", Super T-8 lamp, Instant Start Ballast, NLO (BF: .85-.95) Prismatic Acrylic Diffuser	8	26	Recessed 2'x4' Troffer LED Light Fixture. (1) 26W			3640	0.52	0.21	1,892	750	GE LPL24B04XMM840VQLTW	-	-	-
1263	Admin Building	Mail Room Closet	1	43	4' Wraparound; Tamper-Proof Surface Mounted Fluorescent, (2) 48", Super T-8 lamp, Instant Start Ballast, NLO (BF: .85-.95) Prismatic Acrylic Diffuser	1	24	Surface Mounted T8 LED Retrofit Lamp with External Driver LED 4' T8 Lamp (2) 12W Lamps	1		390	0.04	0.02	23	12	-	GE 34235 LEDT8/LC/G/4/840	GE 21378 LED/DR/D2L/LW	-
1264	Admin Building	Admin Office Open Area	16	65	2'x4' Troffer Recessed Fluorescent, (3) 48", Super T-8 lamp, Instant Start Ballast, NLO (BF: .85-.95) Microcell Diffuser	16	26	Recessed 2'x4' Troffer LED Light Fixture. (1) 26W			6570	1.04	0.41	6,831	2,706	GE LPL24B04XMM840VQLTW	-	-	-
1265	Admin Building	Admin Office Open Area	5	43	2'x4' Troffer Recessed Fluorescent, (2) 48", Super T-8 lamp, Instant Start Ballast, NLO (BF: .85-.95) Prismatic Acrylic Diffuser	5	26	Recessed 2'x4' Troffer LED Light Fixture. (1) 26W			6570	0.22	0.13	1,423	846	GE LPL24B04XMM840VQLTW	-	-	-
1266	Admin Building	Admin Office Open Area	2	65	2'x4' Troffer Recessed Fluorescent, (3) 48", Super T-8 lamp, Instant Start Ballast, NLO (BF: .85-.95) Prismatic Acrylic Diffuser	2	26	Recessed 2'x4' Troffer LED Light Fixture. (1) 26W			8760	0.13	0.05	1,138	451	GE LPL24B04XMM840VQLTW	-	-	-
1267	Admin Building	Admin Office Open Area	1	87	2'x4' Troffer Recessed Fluorescent, (4) 48", Super T-8 lamp, Instant Start Ballast, NLO (BF: .85-.95) Prismatic Acrylic Diffuser	1	26	Recessed 2'x4' Troffer LED Light Fixture. (1) 26W			8760	0.09	0.03	759	225	GE LPL24B04XMM840VQLTW	-	-	-
1268	Admin Building	Admin Office Open Area	1	43	2'x4' Troffer Recessed Fluorescent, (2) 48", Super T-8 lamp, Instant Start Ballast, NLO (BF: .85-.95) Microcell Diffuser	1	26	Recessed 2'x4' Troffer LED Light Fixture. (1) 26W			6570	0.04	0.03	285	169	GE LPL24B04XMM840VQLTW	-	-	-
1269	Admin Building	Admin Office Open Area	3	3	Universal Face Exit Sign; White Surface Mounted EXIT C172Light Emitting Diode, (2) 1.5W lamp, Dual Sided (No Diffuser)	3	3	Existing luminaire to remain as is No Retrofit. To remain as is.			8760	0.01	0.01	74	74	-	-	-	-
1270	Admin Building	Copy Room 1.515	1	43	2'x4' Troffer Recessed Fluorescent, (2) 48", Super T-8 lamp, Instant Start Ballast, NLO (BF: .85-.95) Prismatic Acrylic Diffuser	1	26	Recessed 2'x4' Troffer LED Light Fixture. (1) 26W			3640	0.04	0.03	158	94	GE LPL24B04XMM840VQLTW	-	-	-
1271	Admin Building	Office 1.507	2	65	2'x4' Dimmable Recessed Troffer Recessed Fluorescent, (3) 48", Super T-8 lamp, Instant Start Ballast, NLO (BF: .85-.95) Microcell Diffuser	2	26	Recessed 2'x4' Troffer LED Light Fixture. (1) 26W			3640	0.13	0.05	473	187	GE LPL24B04XMM840VQLTW	-	-	-
1272	Admin Building	Office 1.508	2	65	2'x4' Troffer Recessed Fluorescent, (3) 48", Super T-8 lamp, Instant Start Ballast, NLO (BF: .85-.95) Microcell Diffuser	2	26	Recessed 2'x4' Troffer LED Light Fixture. (1) 26W			3640	0.13	0.05	473	187	GE LPL24B04XMM840VQLTW	-	-	-
1273	Admin Building	Conference Room 1.517	2	65	2'x4' Troffer Recessed Fluorescent, (3) 48", Super T-8 lamp, Instant Start Ballast, NLO (BF: .85-.95) Microcell Diffuser	2	26	Recessed 2'x4' Troffer LED Light Fixture. (1) 26W			1560	0.13	0.05	203	80	GE LPL24B04XMM840VQLTW	-	-	-
1274	Admin Building	Conference Room 1.517	4	57	Recessed Can 8" Recessed Incandescent, (1) 60W lamp Prismatic Acrylic Diffuser	4	11	Recessed Install LED Screw-in A-Style Lamp Light Emitting Diode Lamp, Screw-in, (1) 12W lamp			1560	0.23	0.04	356	67	-	TCP L11A19D2541K	-	-
1275	Admin Building	Conference Room 1.509	7	65	2'x4' Troffer Recessed Fluorescent, (3) 48", Super T-8 lamp, Instant Start Ballast, NLO (BF: .85-.95) Prismatic Acrylic Diffuser	7	26	Recessed 2'x4' Troffer LED Light Fixture. (1) 26W			1560	0.45	0.18	710	281	GE LPL24B04XMM840VQLTW	-	-	-
1276	Admin Building	Field Human Resource Office	2	65	2'x4' Troffer Recessed Fluorescent, (3) 48", Super T-8 lamp, Instant Start Ballast, NLO (BF: .85-.95) Microcell Diffuser	2	26	Recessed 2'x4' Troffer LED Light Fixture. (1) 26W			3640	0.13	0.05	473	187	GE LPL24B04XMM840VQLTW	-	-	-
1277	Admin Building	Field Human Resource Office	1	30	2' Wraparound; Tamper-Proof Surface Mounted Fluorescent, (2) 24", T-8 lamp, Instant Start Ballast, NLO (BF: .85-.95) Prismatic Acrylic Diffuser	1	16	Surface Mounted T8 LED Retrofit Lamp with External Driver LED 2' T8 Lamp (2) 8W Lamps			200	0.03	0.02	6	3	-	GE 36409 LEDT8/LC/G/2/840	GE 21378 LED/DR/D2L/LW	-
1278	Admin Building	Office 1.502	2	65	2'x4' Troffer Recessed Fluorescent, (3) 48", Super T-8 lamp, Instant Start Ballast, NLO (BF: .85-.95) Microcell Diffuser	2	26	Recessed 2'x4' Troffer LED Light Fixture. (1) 26W	1		2730	0.13	0.05	473	187	GE LPL24B04XMM840VQLTW	-	-	-
1279	Admin Building	Office	4	65	2'x4' Troffer Recessed Fluorescent, (3) 48", Super T-8 lamp, Instant Start Ballast, NLO (BF: .85-.95) Microcell Diffuser	4	26	Recessed 2'x4' Troffer LED Light Fixture. (1) 26W	1		2730	0.26	0.10	946	375	GE LPL24B04XMM840VQLTW	-	-	-
1280	Admin Building	Office 1.516	2	65	2'x4' Troffer Recessed Fluorescent, (3) 48", Super T-8 lamp, Instant Start Ballast, NLO (BF: .85-.95) Microcell Diffuser	2	26	Recessed 2'x4' Troffer LED Light Fixture. (1) 26W			3640	0.13	0.05	473	187	GE LPL24B04XMM840VQLTW	-	-	-
1281	Admin Building	Office 1.506	2	65	2'x4' Troffer Recessed Fluorescent, (3) 48", Super T-8 lamp, Instant Start Ballast, NLO (BF: .85-.95) Microcell Diffuser	2	26	Recessed 2'x4' Troffer LED Light Fixture. (1) 26W			3640	0.13	0.05	473	187	GE LPL24B04XMM840VQLTW	-	-	-
1282	Admin Building	Office 1.505	2	65	2'x4' Troffer Recessed Fluorescent, (3) 48", Super T-8 lamp, Instant Start Ballast, NLO (BF: .85-.95) Microcell Diffuser	2	26	Recessed 2'x4' Troffer LED Light Fixture. (1) 26W			3640	0.13	0.05	473	187	GE LPL24B04XMM840VQLTW	-	-	-
1283	Admin Building	Office	2	65	2'x4' Troffer Recessed Fluorescent, (3) 48", Super T-8 lamp, Instant Start Ballast, NLO (BF: .85-.95) Microcell Diffuser	2	26	Recessed 2'x4' Troffer LED Light Fixture. (1) 26W		1	2730	0.13	0.05	473	187	GE LPL24B04XMM840VQLTW	-	-	-
1284	Admin Building	Office 1.511	2	65	2'x4' Troffer Recessed Fluorescent, (3) 48", Super T-8 lamp, Instant Start Ballast, NLO (BF: .85-.95) Microcell Diffuser	2	26	Recessed 2'x4' Troffer LED Light Fixture. (1) 26W			3640	0.13	0.05	473	187	GE LPL24B04XMM840VQLTW	-	-	-
1285	Admin Building	Mens Staff Restroom 1.523	1	43	4' Wraparound; Tamper-Proof Surface Mounted Fluorescent, (2) 48", Super T-8 lamp, Instant Start Ballast, NLO (BF: .85-.95) Prismatic Acrylic Diffuser	1	24	Surface Mounted T8 LED Retrofit Lamp with External Driver LED 4' T8 Lamp (2) 12W Lamps	1		1092	0.04	0.02	63	35	-	GE 34235 LEDT8/LC/G/4/840	GE 21378 LED/DR/D2L/LW	-
1286	Admin Building	Womens Staff Restroom 1.522	1	43	4' Wraparound; Tamper-Proof Surface Mounted Fluorescent, (2) 48", Super T-8 lamp, Instant Start Ballast, NLO (BF: .85-.95) Prismatic Acrylic Diffuser	1	24	Surface Mounted T8 LED Retrofit Lamp with External Driver LED 4' T8 Lamp (2) 12W Lamps	1		1092	0.04	0.02	63	35	-	GE 34235 LEDT8/LC/G/4/840	GE 21378 LED/DR/D2L/LW	-

Line #	Facility Area	Space	Pre Fixture Qty	Pre Watts/ Fixt	Pre Description	Post Fixture Qty	Post Watt/ Fixt	Post Description	Wallswitch Sensor	Ceiling Sensor	Hours of Operation	Base kW	Proposed kW	Base kWh	Proposed kWh	Luminaire Part #	Lamp Part #	Driver Part#	Misc. Parts
1287	Admin Building	Office (across from 1.306)	2	65	2'x4' Troffer Recessed Fluorescent, (3) 48", Super T-8 lamp, Instant Start Ballast, NLO (BF: .85-.95) Prismatic Acrylic Diffuser	2	26	Recessed 2'x4' Troffer LED Light Fixture. (1) 26W	1		2730	0.13	0.05	473	187	GE LPL24B04XMM840VQLTW	-	-	-
1288	Admin Building	Human Resources Office 1.503	6	43	2'x4' Troffer Recessed Fluorescent, (2) 48", Super T-8 lamp, Instant Start Ballast, NLO (BF: .85-.95) Prismatic Acrylic Diffuser	6	26	Recessed 2'x4' Troffer LED Light Fixture. (1) 26W			3640	0.26	0.15	946	562	GE LPL24B04XMM840VQLTW	-	-	-
1289	Admin Building	Human Resources Office 1.503	1	30	2' Wraparound; Tamper-Proof Surface Mounted Fluorescent, (2) 24", T-8 lamp, Instant Start Ballast, NLO (BF: .85-.95) Prismatic Acrylic Diffuser	1	16	Surface Mounted T8 LED Retrofit Lamp with External Driver LED 2' T8 Lamp (2) 8W Lamps			3640	0.03	0.02	108	58	-	GE 36409 LEDT8/LC/G/2/840	GE 21378 LED/DR/D2L/LW	-
1290	Admin Building	Human Resources Office 1.503	2	65	2'x4' Troffer Recessed Fluorescent, (3) 48", Super T-8 lamp, Instant Start Ballast, NLO (BF: .85-.95) Prismatic Acrylic Diffuser	2	26	Recessed 2'x4' Troffer LED Light Fixture. (1) 26W	1		2730	0.13	0.05	473	187	GE LPL24B04XMM840VQLTW	-	-	-
1291	Admin Building	Superintendent Office Waiting	2	65	2'x4' Troffer Recessed Fluorescent, (3) 48", Super T-8 lamp, Instant Start Ballast, NLO (BF: .85-.95) Prismatic Acrylic Diffuser	2	26	Recessed 2'x4' Troffer LED Light Fixture. (1) 26W			3640	0.13	0.05	473	187	GE LPL24B04XMM840VQLTW	-	-	-
1292	Admin Building	Superintendent Assistant Office	2	65	2'x4' Troffer Recessed Fluorescent, (3) 48", Super T-8 lamp, Instant Start Ballast, NLO (BF: .85-.95) Microcell Diffuser	2	26	Recessed 2'x4' Troffer LED Light Fixture. (1) 26W			3640	0.13	0.05	473	187	GE LPL24B04XMM840VQLTW	-	-	-
1293	Admin Building	Superintendent Office 1.303	4	65	2'x4' Dimmable Recessed Troffer Recessed Fluorescent, (3) 48", Super T-8 lamp, Instant Start Ballast, NLO (BF: .85-.95) Deep Cell Parabolic Diffuser	4	26	Recessed 2'x4' Troffer LED Light Fixture. (1) 26W			3640	0.26	0.10	946	375	GE LPL24B04XMM840VQLTW	-	-	-
1294	Admin Building	Staff Restroom	1	43	4' Wraparound; Tamper-Proof Surface Mounted Fluorescent, (2) 48", Super T-8 lamp, Instant Start Ballast, NLO (BF: .85-.95) Prismatic Acrylic Diffuser	1	24	Surface Mounted T8 LED Retrofit Lamp with External Driver LED 4' T8 Lamp (2) 12W Lamps	1		1092	0.04	0.02	63	35	-	GE 34235 LEDT8/LC/G/4/840	GE 21378 LED/DR/D2L/LW	-
1295	Admin Building	Visitor Main Lobby	8	71	Recessed Can 12" Recessed LED Light Fixture. (1) 75W Prismatic Acrylic Diffuser	8	71	Existing luminaire to remain as is No Retrofit. To remain as is.			8760	0.56	0.56	4,943	4,943	-	-	-	-
1296	Admin Building	Visitor Main Lobby	1	65	2'x4' Troffer Recessed Fluorescent, (3) 48", Super T-8 lamp, Instant Start Ballast, NLO (BF: .85-.95) Prismatic Acrylic Diffuser	1	26	Recessed 2'x4' Troffer LED Light Fixture. (1) 26W			8760	0.06	0.03	569	225	GE LPL24B04XMM840VQLTW	-	-	-
1297	Admin Building	Visitor Main Lobby	1	43	2'x4' Troffer Recessed Fluorescent, (2) 48", Super T-8 lamp, Instant Start Ballast, NLO (BF: .85-.95) Prismatic Acrylic Diffuser	1	26	Recessed 2'x4' Troffer LED Light Fixture. (1) 26W			8760	0.04	0.03	379	225	GE LPL24B04XMM840VQLTW	-	-	-
1298	Admin Building	Visitor Main Lobby	1	43	2'x4' Troffer Recessed Flanged Fluorescent, (2) 48", Super T-8 lamp, Instant Start Ballast, NLO (BF: .85-.95) Prismatic Acrylic Diffuser	1	24	Recessed Flanged T8 LED Retrofit Lamp with External Driver LED 4' T8 Lamp (2) 12W Lamps			8760	0.04	0.02	379	208	-	GE 34235 LEDT8/LC/G/4/840	GE 21378 LED/DR/D2L/LW	-
1299	Admin Building	Visitor Main Lobby	1	3	Universal Face Exit Sign; White Surface Mounted EXIT C172Light Emitting Diode, (2) 1.5W lamp, Dual Sided (No Diffuser)	1	3	Existing luminaire to remain as is No Retrofit. To remain as is.			8760	0.00	0.00	25	25	-	-	-	-
1300	Admin Building	Mens Public Restroom 1.104	1	43	2'x4' Troffer Recessed Flanged Fluorescent, (2) 48", Super T-8 lamp, Instant Start Ballast, NLO (BF: .85-.95) Prismatic Acrylic Diffuser	1	24	Recessed Flanged T8 LED Retrofit Lamp with External Driver LED 4' T8 Lamp (2) 12W Lamps			6570	0.04	0.02	285	156	-	GE 34235 LEDT8/LC/G/4/840	GE 21378 LED/DR/D2L/LW	-
1301	Admin Building	Womens Public Restroom 1.105	2	43	2'x4' Troffer Recessed Flanged Fluorescent, (2) 48", Super T-8 lamp, Instant Start Ballast, NLO (BF: .85-.95) Prismatic Acrylic Diffuser	2	24	Recessed Flanged T8 LED Retrofit Lamp with External Driver LED 4' T8 Lamp (2) 12W Lamps			6570	0.09	0.05	569	312	-	GE 34235 LEDT8/LC/G/4/840	GE 21378 LED/DR/D2L/LW	-
1302	Admin Building	ADA Restroom 1.110	1	65	2'x4' Troffer Recessed Flanged Fluorescent, (3) 48", Super T-8 lamp, Instant Start Ballast, NLO (BF: .85-.95) Prismatic Acrylic Diffuser	1	36	Recessed Flanged T8 LED Retrofit Lamp with External Driver LED 4' T8 Lamp (3) 12W Lamps			1456	0.06	0.04	95	52	-	GE 34235 LEDT8/LC/G/4/840	GE 21379 LED/DR/D4L/LW	-
1303	Admin Building	Storage Closet (wood door)	2	43	2'x4' Troffer Recessed Fluorescent, (2) 48", Super T-8 lamp, Instant Start Ballast, NLO (BF: .85-.95) Deep Cell Parabolic Diffuser	2	26	Recessed 2'x4' Troffer LED Light Fixture. (1) 26W			520	0.09	0.05	45	27	GE LPL24B04XMM840VQLTW	-	-	-
1304	Outside Warehouse	Receiving / Open Warehouse	206	43	4' Industrial Chain Mounted Fluorescent, (2) 48", Super T-8 lamp, Instant Start Ballast, NLO (BF: .85-.95) (No Diffuser)	206	24	Chain Mounted T8 LED Retrofit Lamp with External Driver LED 4' T8 Lamp (2) 12W Lamps - HIGH			8760	8.92	4.89	78,174	42,876	-	GE 34235 LEDT8/LC/G/4/840	GE 21378 LED/DR/D2L/LW	-
1305	Outside Warehouse	Receiving / Open Warehouse	3	19	Universal Face Exit Sign; White Surface Mounted Compact Fluorescent, twin, (2) 7W lamp (No Diffuser)	3	3	Surface Mounted Universal Face Exit Sign; White LED Light Fixture. (1) 3W			8760	0.06	0.01	498	78	TCP 22743 RD LED EXIT BBU WH HOUSING	-	-	-
1306	Outside Warehouse	Receiving / Open Warehouse	3	3	Universal Face Exit Sign; White Surface Mounted EXIT C172Light Emitting Diode, (2) 1.5W lamp, Dual Sided (No Diffuser)	3	3	Existing luminaire to remain as is No Retrofit. To remain as is.			8760	0.01	0.01	74	74	-	-	-	-
1307	Outside Warehouse	Receiving / Open Warehouse	3	71	Dock Luminaire w/ Arm Wall Mounted Incandescent, (1) 75W lamp (No Diffuser)	3	13	Wall Mounted Install LED Screw-in PAR38 Lamp Light Emitting Diode Lamp, Screw-in, (1) 14W lamp			1560	0.21	0.04	333	59	-	TCP LED14P38D41KFL	-	-
1308	Outside Warehouse	Uniform Storage Cage	12	43	4' Strip Surface Mounted Fluorescent, (2) 48", Super T-8 lamp, Instant Start Ballast, NLO (BF: .85-.95) (No Diffuser)	12	24	Surface Mounted T8 LED Retrofit Lamp with External Driver LED 4' T8 Lamp (2) 12W Lamps			8760	0.52	0.29	4,554	2,498	-	GE 34235 LEDT8/LC/G/4/840	GE 21378 LED/DR/D2L/LW	-
1309	Outside Warehouse	Walk in Freezer	4	17	Flood Light Wall Mounted LED Light Fixture. (1) 18W Flat Glass Lens	4	17	Existing luminaire to remain as is No Retrofit. To remain as is.			3640	0.07	0.07	246	246	-	-	-	-
1310	Outside Warehouse	Walk in Freezer	4	17	Flood Light Wall Mounted LED Light Fixture. (1) 18W Flat Glass Lens	4	17	Existing luminaire to remain as is No Retrofit. To remain as is.			3640	0.07	0.07	246	246	-	-	-	-
1311	Outside Warehouse	Walk in Cooler	14	10	Jelly Jar Surface Mounted Light Emitting Diode Lamp, Screw-in, (1) 12W lamp Glass Jelly Jar	14	12	Surface Mounted Jelly Jar LED Light Fixture. (1) 12W			3640	0.14	0.17	523	605	ECONOLITE E-VTB01A-CM501G	-	-	-
1312	Outside Warehouse	Inmate Restroom 13.113	1	43	4' Wraparound; Tamper-Proof Surface Mounted Fluorescent, (2) 48", Super T-8 lamp, Instant Start Ballast, NLO (BF: .85-.95) Prismatic Acrylic Diffuser	1	24	Surface Mounted T8 LED Retrofit Lamp with External Driver LED 4' T8 Lamp (2) 12W Lamps	1		1092	0.04	0.02	63	35	-	GE 34235 LEDT8/LC/G/4/840	GE 21378 LED/DR/D2L/LW	-
1313	Outside Warehouse	Custodial Closet	1	43	4' Wraparound; Tamper-Proof Surface Mounted Fluorescent, (2) 48", Super T-8 lamp, Instant Start Ballast, NLO (BF: .85-.95) Prismatic Acrylic Diffuser	1	24	Surface Mounted T8 LED Retrofit Lamp with External Driver LED 4' T8 Lamp (2) 12W Lamps	1		1170	0.04	0.02	68	37	-	GE 34235 LEDT8/LC/G/4/840	GE 21378 LED/DR/D2L/LW	-
1314	Outside Warehouse	Security Panel Closet 13.123	1	41	Wall-Pack Surface Mounted Compact Fluorescent, quad, (2) 18W lamp Prismatic Acrylic Diffuser	1	14	Surface Mounted Install LED Plug-in Lamp; Bypass and Remove Existing Ballast. Light Emitting Diode Lamp, Screw-in, (2) 8W lamp			520	0.04	0.01	21	7	-	Hylite HL-OB-8W-G24-40K	-	-
1315	Outside Warehouse	Staff Restroom 13.103	1	43	4' Wraparound; Tamper-Proof Surface Mounted Fluorescent, (2) 48", Super T-8 lamp, Instant Start Ballast, NLO (BF: .85-.95) Prismatic Acrylic Diffuser	1	24	Surface Mounted T8 LED Retrofit Lamp with External Driver LED 4' T8 Lamp (2) 12W Lamps	1		1092	0.04	0.02	63	35	-	GE 34235 LEDT8/LC/G/4/840	GE 21378 LED/DR/D2L/LW	-
1316	Outside Warehouse	Electrical Room	2	43	4' Industrial Chain Mounted Fluorescent, (2) 48", Super T-8 lamp, Instant Start Ballast, NLO (BF: .85-.95) (No Diffuser)	2	24	Chain Mounted T8 LED Retrofit Lamp with External Driver LED 4' T8 Lamp (2) 12W Lamps	1		390	0.09	0.05	45	25	-	GE 34235 LEDT8/LC/G/4/840	GE 21378 LED/DR/D2L/LW	-
1317	Outside Warehouse	Short Term Storage 13.110	6	43	4' Industrial Surface Mounted Fluorescent, (2) 48", Super T-8 lamp, Instant Start Ballast, NLO (BF: .85-.95) (No Diffuser)	6	24	Surface Mounted T8 LED Retrofit Lamp with External Driver LED 4' T8 Lamp (2) 12W Lamps			1560	0.26	0.14	405	222	-	GE 34235 LEDT8/LC/G/4/840	GE 21378 LED/DR/D2L/LW	-
1318	Outside Warehouse	Upper Loft Storage	6	43	4' Industrial Chain Mounted Fluorescent, (2) 48", Super T-8 lamp, Instant Start Ballast, NLO (BF: .85-.95) (No Diffuser)	6	24	Chain Mounted T8 LED Retrofit Lamp with External Driver LED 4' T8 Lamp (2) 12W Lamps			8760	0.26	0.14	2,277	1,249	-	GE 34235 LEDT8/LC/G/4/840	GE 21378 LED/DR/D2L/LW	-
1319	Outside Warehouse	Restricted Storage 13.109	4	43	4' Vapor Proof; Tamper-Proof Surface Mounted Fluorescent, (2) 48", Super T-8 lamp, Instant Start Ballast, NLO (BF: .85-.95) Prismatic Acrylic Diffuser	4	24	Surface Mounted T8 LED Retrofit Lamp with External Driver LED 4' T8 Lamp (2) 12W Lamps	1		390	0.17	0.10	90	49	-	GE 34235 LEDT8/LC/G/4/840	GE 21378 LED/DR/D2L/LW	-
1320	Outside Warehouse	Warehouse Office	4	65	2'x4' Troffer Recessed Fluorescent, (3) 48", Super T-8 lamp, Instant Start Ballast, NLO (BF: .85-.95) Prismatic Acrylic Diffuser	4	26	Recessed 2'x4' Troffer LED Light Fixture. (1) 26W			3640	0.26	0.10	946	375	GE LPL24B04XMM840VQLTW	-	-	-
1321	Outside Warehouse	Warehouse Office	2	43	2'x4' Troffer Recessed Fluorescent, (2) 48", Super T-8 lamp, Instant Start Ballast, NLO (BF: .85-.95) Deep Cell Parabolic Diffuser	2	26	Recessed 2'x4' Troffer LED Light Fixture. (1) 26W			3640	0.09	0.05	315	187	GE LPL24B04XMM840VQLTW	-	-	-
1322	Outside Warehouse	Upper Office (used for storage)	2	87	4' Wraparound; Tamper-Proof Surface Mounted Fluorescent, (4) 48", Super T-8 lamp, Instant Start Ballast, NLO (BF: .85-.95) Prismatic Acrylic Diffuser	2	48	Surface Mounted T8 LED Retrofit Lamp with External Driver LED 4' T8 Lamp (4) 12W Lamps			520	0.17	0.10	90	49	-	GE 34235 LEDT8/LC/G/4/840	GE 21379 LED/DR/D4L/LW	-
1323	Outside Warehouse	Upper Office (used for storage)	2	43	4' Wraparound; Tamper-Proof Surface Mounted Fluorescent, (2) 48", Super T-8 lamp, Instant Start Ballast, NLO (BF: .85-.95) Prismatic Acrylic Diffuser	2	24	Surface Mounted T8 LED Retrofit Lamp with External Driver LED 4' T8 Lamp (2) 12W Lamps			520	0.09	0.05	45	25	-	GE 34235 LEDT8/LC/G/4/840	GE 21378 LED/DR/D2L/LW	-
1324	Outside Warehouse	Upper Office (used for storage)	1	87	4' Wraparound; Tamper-Proof Surface Mounted Fluorescent, (4) 48", Super T-8 lamp, Instant Start Ballast, NLO (BF: .85-.95) Prismatic Acrylic Diffuser	1	48	Surface Mounted T8 LED Retrofit Lamp with External Driver LED 4' T8 Lamp (4) 12W Lamps			200	0.09	0.05	17	10	-	GE 34235 LEDT8/LC/G/4/840	GE 21379 LED/DR/D4L/LW	-
1325	Metal Shop	Open Shop	10	43	4' Industrial Chain Mounted Fluorescent, (2) 48", Super T-8 lamp, Instant Start Ballast, NLO (BF: .85-.95) (No Diffuser)	10	24	Chain Mounted T8 LED Retrofit Lamp with External Driver LED 4' T8 Lamp (2) 12W Lamps			3640	0.43	0.24	1,577	865	-	GE 34235 LEDT8/LC/G/4/840	GE 21378 LED/DR/D2L/LW	-

Line #	Facility Area	Space	Pre Fixture Qty	Pre Watts/ Fixt	Pre Description	Post Fixture Qty	Post Watt/ Fixt	Post Description	Wallswitch Sensor	Ceiling Sensor	Hours of Operation	Base kW	Proposed kW	Base kWh	Proposed kWh	Luminaire Part #	Lamp Part #	Driver Part#	Misc. Parts
1326	Metal Shop	Open Shop	3	413	High-Bay Surface Mounted Metal Halide, (1) 400W lamp Flat Glass Lens	3	135	Surface Mounted High-Bay LED Light Fixture. (1) 136W - HIGH			3640	1.24	0.40	4,514	1,470	LITHONIA JEBL-18L-40K-80-WH	-	-	LITHONIA LEBLPCLR1
1327	Metal Shop	Open Shop	2	43	4' Corner Mount Wall Vanity; Tamper-Proof Wall Mounted Fluorescent, (2) 48", Super T-8 lamp, Instant Start Ballast, NLO (BF: .85-.95) Prismatic Acrylic Diffuser	2	24	Wall Mounted T8 LED Retrofit Lamp with External Driver LED 4' T8 Lamp (2) 12W Lamps			3640	0.09	0.05	315	173	-	GE 34235 LEDT8/LC/G/4/840	GE 21378 LED/DR/D2L/LW	-
1328	Metal Shop	Open Shop	1	3	Universal Face Exit Sign; White Surface Mounted EXIT C172Light Emitting Diode, (2) 1.5W lamp, Dual Sided (No Diffuser)	1	3	Existing luminaire to remain as is No Retrofit. To remain as is.			8760	0.00	0.00	25	25	-	-	-	-
1329	Metal Shop	Shop Office / Tool Room	1	65	2'x4' Troffer Pendant Mounted Fluorescent, (3) 48", Super T-8 lamp, Instant Start Ballast, NLO (BF: .85-.95) Deep Cell Parabolic Diffuser	1	36	Pendant Mounted T8 LED Retrofit Lamp with External Driver LED 4' T8 Lamp (3) 12W Lamps	1		2730	0.06	0.04	237	130	-	GE 34235 LEDT8/LC/G/4/840	GE 21379 LED/DR/D4L/LW	-
1330	Metal Shop	Shop Office / Tool Room	1	43	4' Industrial Surface Mounted Fluorescent, (2) 48", Super T-8 lamp, Instant Start Ballast, NLO (BF: .85-.95) (No Diffuser)	1	24	Surface Mounted T8 LED Retrofit Lamp with External Driver LED 4' T8 Lamp (2) 12W Lamps			3640	0.04	0.02	158	86	-	GE 34235 LEDT8/LC/G/4/840	GE 21378 LED/DR/D2L/LW	-
1331	Metal Shop	Exterior Metal Shop Storage Building	2	266	Low-Bay Surface Mounted Metal Halide, (1) 250W lamp Flat Glass Lens	2	91	Surface Mounted High-Bay LED Light Fixture. (1) 92W - HIGH			520	0.53	0.18	277	95	LITHONIA JEBL-12L-40K-80-WH	-	-	LITHONIA LEBLPCLR1
1332	Metal Shop	Exterior Metal Shop Storage Building	4	238	Flood Light Knuckle fitter 1/2" NPT Halogen Incandescent, (1) 250W lamp Flat Glass Lens	4	26	Knuckle fitter 1/2" NPT Flood Light LED Light Fixture. (1) 26W			520	0.95	0.10	494	54	RAB FFLED26N	-	-	-
1333	Metal Shop	Exterior Metal Shop Storage Building	1	116	4' Vapor Proof Wall Mounted Fluorescent, (2) 48", STD HO lamp Prismatic Acrylic Diffuser	1	44	Wall Mounted 4' Vapor Proof LED Light Fixture. (1) 44W			520	0.12	0.04	60	23	FEM L48 6000LM LPPFL MD MVOLT GZ10 40K 80CRI TRS	-	-	-
1334	Sheet Metal Shop	Open Shop	17	43	4' Industrial Surface Mounted Fluorescent, (2) 48", Super T-8 lamp, Instant Start Ballast, NLO (BF: .85-.95) (No Diffuser)	17	24	Surface Mounted T8 LED Retrofit Lamp with External Driver LED 4' T8 Lamp (2) 12W Lamps			3640	0.74	0.40	2,681	1,470	-	GE 34235 LEDT8/LC/G/4/840	GE 21378 LED/DR/D2L/LW	-
1335	Auto Shop	Open shop	10	266	Low-Bay Surface Mounted Metal Halide, (1) 250W lamp Prismatic Acrylic Diffuser	10	91	Surface Mounted High-Bay LED Light Fixture. (1) 92W - HIGH			3640	2.66	0.91	9,691	3,315	LITHONIA JEBL-12L-40K-80-WH	-	-	LITHONIA LEBLPCLR1
1336	Auto Shop	Open shop	23	43	4' Industrial Surface Mounted Fluorescent, (2) 48", Super T-8 lamp, Instant Start Ballast, NLO (BF: .85-.95) (No Diffuser)	23	24	Surface Mounted T8 LED Retrofit Lamp with External Driver LED 4' T8 Lamp (2) 12W Lamps			3640	1.00	0.55	3,627	1,989	-	GE 34235 LEDT8/LC/G/4/840	GE 21378 LED/DR/D2L/LW	-
1337	Auto Shop	Shop Office	2	65	2'x4' Troffer Recessed Fluorescent, (3) 48", Super T-8 lamp, Instant Start Ballast, NLO (BF: .85-.95) Prismatic Acrylic Diffuser	2	26	Recessed 2'x4' Troffer LED Light Fixture. (1) 26W	1		2730	0.13	0.05	473	187	GE LPL24B04XMM840VQLTW	-	-	-
1338	Auto Shop	Tool Room	10	43	4' Industrial Surface Mounted Fluorescent, (2) 48", Super T-8 lamp, Instant Start Ballast, NLO (BF: .85-.95) (No Diffuser)	10	24	Surface Mounted T8 LED Retrofit Lamp with External Driver LED 4' T8 Lamp (2) 12W Lamps			1560	0.43	0.24	676	371	-	GE 34235 LEDT8/LC/G/4/840	GE 21378 LED/DR/D2L/LW	-
1339	Auto Shop	Parts Room	2	232	8' Vapor Proof Surface Mounted Fluorescent, (2) 96", STD HO lamp Prismatic Acrylic Diffuser	2	64	Surface Mounted 8' Vapor Proof LED Light Fixture. (1) 65W			1560	0.46	0.13	724	201	FEM L96 9000LM LPPFL MD MVOLT GZ10 40K 80CRI TRS MEZ105299	-	-	-
1340	Auto Shop	Staff Restroom 14.219	1	43	4' Wraparound; Tamper-Proof Surface Mounted Fluorescent, (2) 48", Super T-8 lamp, Instant Start Ballast, NLO (BF: .85-.95) Prismatic Acrylic Diffuser	1	24	Surface Mounted T8 LED Retrofit Lamp with External Driver LED 4' T8 Lamp (2) 12W Lamps	1		1092	0.04	0.02	63	35	-	GE 34235 LEDT8/LC/G/4/840	GE 21378 LED/DR/D2L/LW	-
1341	Auto Shop	Inmate Restroom 14.220	1	43	4' Wraparound; Tamper-Proof Surface Mounted Fluorescent, (2) 48", Super T-8 lamp, Instant Start Ballast, NLO (BF: .85-.95) Prismatic Acrylic Diffuser	1	24	Surface Mounted T8 LED Retrofit Lamp with External Driver LED 4' T8 Lamp (2) 12W Lamps	1		1092	0.04	0.02	63	35	-	GE 34235 LEDT8/LC/G/4/840	GE 21378 LED/DR/D2L/LW	-
1342	Auto Shop	Custodial Closet 14.223	1	43	4' Wraparound; Tamper-Proof Surface Mounted Fluorescent, (2) 48", Super T-8 lamp, Instant Start Ballast, NLO (BF: .85-.95) Prismatic Acrylic Diffuser	1	24	Surface Mounted T8 LED Retrofit Lamp with External Driver LED 4' T8 Lamp (2) 12W Lamps	1		1170	0.04	0.02	68	37	-	GE 34235 LEDT8/LC/G/4/840	GE 21378 LED/DR/D2L/LW	-
1343	Auto Shop	Upper loft Storage Room	1	43	4' Industrial Surface Mounted Fluorescent, (2) 48", Super T-8 lamp, Instant Start Ballast, NLO (BF: .85-.95) (No Diffuser)	1	24	Surface Mounted T8 LED Retrofit Lamp with External Driver LED 4' T8 Lamp (2) 12W Lamps			200	0.04	0.02	9	5	-	GE 34235 LEDT8/LC/G/4/840	GE 21378 LED/DR/D2L/LW	-
1344	Central Plant	Boiler Plant Open Area	27	420	High-Bay Surface Mounted High Pressure Sodium, (1) 400W lamp (No Diffuser)	27	135	Surface Mounted High-Bay LED Light Fixture. (1) 136W - HIGH			8760	11.33	3.64	99,259	31,845	LITHONIA JEBL-18L-40K-80-WH	-	-	LITHONIA LEBLPCLR1
1345	Central Plant	Boiler Plant Open Area	1	43	4' Industrial Chain Mounted Fluorescent, (2) 48", Super T-8 lamp, Instant Start Ballast, NLO (BF: .85-.95) (No Diffuser)	1	24	Chain Mounted T8 LED Retrofit Lamp with External Driver LED 4' T8 Lamp (2) 12W Lamps			8760	0.04	0.02	379	208	-	GE 34235 LEDT8/LC/G/4/840	GE 21378 LED/DR/D2L/LW	-
1346	Central Plant	Boiler Plant Open Area	2	19	Universal Face Exit Sign; White Surface Mounted Compact Fluorescent, twin, (2) 7W lamp (No Diffuser)	2	3	Surface Mounted Universal Face Exit Sign; White LED Light Fixture. (1) 3W			8760	0.04	0.01	332	52	TCP 22743 RD LED EXIT BBU WH HOUSING	-	-	-
1347	Central Plant	Small Control Room	4	43	4' Strip Recessed Fluorescent, (2) 48", Super T-8 lamp, Instant Start Ballast, NLO (BF: .85-.95) Prismatic Acrylic Diffuser	4	24	Recessed T8 LED Retrofit Lamp with External Driver LED 4' T8 Lamp (2) 12W Lamps			8760	0.17	0.10	1,518	833	-	GE 34235 LEDT8/LC/G/4/840	GE 21378 LED/DR/D2L/LW	-
1348	Central Plant	Coal Storage	8	413	High-Bay Surface Mounted Metal Halide, (1) 400W lamp Flat Glass Lens	8	135	Surface Mounted High-Bay LED Light Fixture. (1) 136W - HIGH			8760	3.31	1.08	28,967	9,436	LITHONIA JEBL-18L-40K-80-WH	-	-	LITHONIA LEBLPCLR1
1349	Central Plant	Coal Storage	6	116	4' Vapor Proof Surface Mounted Fluorescent, (2) 48", STD HO lamp Prismatic Acrylic Diffuser	6	44	Surface Mounted 4' Vapor Proof LED Light Fixture. (1) 44W			8760	0.69	0.26	6,072	2,290	FEM L48 6000LM LPPFL MD MVOLT GZ10 40K 80CRI TRS	-	-	-
1350	Central Plant	Coal Storage	1	3	Universal Face Exit Sign; White Surface Mounted EXIT C172Light Emitting Diode, (2) 1.5W lamp, Dual Sided (No Diffuser)	1	3	Existing luminaire to remain as is No Retrofit. To remain as is.			8760	0.00	0.00	25	25	-	-	-	-
1351	Central Plant	Electrical Room 14.303	18	43	4' Industrial Chain Mounted Fluorescent, (2) 48", Super T-8 lamp, Instant Start Ballast, NLO (BF: .85-.95) (No Diffuser)	18	24	Chain Mounted T8 LED Retrofit Lamp with External Driver LED 4' T8 Lamp (2) 12W Lamps			8760	0.78	0.43	6,831	3,746	-	GE 34235 LEDT8/LC/G/4/840	GE 21378 LED/DR/D2L/LW	-
1352	Central Plant	Electrical Room 14.303	1	3	Universal Face Exit Sign; White Surface Mounted EXIT C172Light Emitting Diode, (2) 1.5W lamp, Dual Sided (No Diffuser)	1	3	Existing luminaire to remain as is No Retrofit. To remain as is.			8760	0.00	0.00	25	25	-	-	-	-
1353	Central Plant	Security Panel Closet 14.310	1	41	Wall-Pack Surface Mounted Compact Fluorescent, quad, (2) 18W lamp Prismatic Acrylic Diffuser	1	14	Surface Mounted Install LED Plug-in Lamp; Bypass and Remove Existing Ballast. Light Emitting Diode Lamp, Screw-in, (2) 8W lamp			520	0.04	0.01	21	7	-	Hylite HL-OB-8W-G24-40K	-	-
1354	Central Plant	Generator Room	11	43	4' Industrial Surface Mounted Fluorescent, (2) 48", Super T-8 lamp, Instant Start Ballast, NLO (BF: .85-.95) (No Diffuser)	11	24	Surface Mounted T8 LED Retrofit Lamp with External Driver LED 4' T8 Lamp (2) 12W Lamps			520	0.48	0.26	248	136	-	GE 34235 LEDT8/LC/G/4/840	GE 21378 LED/DR/D2L/LW	-
1355	Central Plant	Generator Room	1	3	Universal Face Exit Sign; White Surface Mounted EXIT C172Light Emitting Diode, (2) 1.5W lamp, Dual Sided (No Diffuser)	1	3	Existing luminaire to remain as is No Retrofit. To remain as is.			8760	0.00	0.00	25	25	-	-	-	-
1356	Central Plant	Generator Room	1	3	Universal Face Exit Sign; White Surface Mounted EXIT C172Light Emitting Diode, (2) 1.5W lamp, Dual Sided (No Diffuser)	1	3	Existing luminaire to remain as is No Retrofit. To remain as is.			8760	0.00	0.00	25	25	-	-	-	-
1357	Central Plant	Office 14.301	3	65	2'x4' Troffer Recessed Flanged Fluorescent, (3) 48", Super T-8 lamp, Instant Start Ballast, NLO (BF: .85-.95) Prismatic Acrylic Diffuser	3	36	Recessed Flanged T8 LED Retrofit Lamp with External Driver LED 4' T8 Lamp (3) 12W Lamps	1		2730	0.19	0.11	710	389	-	GE 34235 LEDT8/LC/G/4/840	GE 21379 LED/DR/D4L/LW	-
1358	Central Plant	Custodial Closet 14.309	1	43	4' Wraparound; Tamper-Proof Surface Mounted Fluorescent, (2) 48", Super T-8 lamp, Instant Start Ballast, NLO (BF: .85-.95) Prismatic Acrylic Diffuser	1	24	Surface Mounted T8 LED Retrofit Lamp with External Driver LED 4' T8 Lamp (2) 12W Lamps	1		1170	0.04	0.02	68	37	-	GE 34235 LEDT8/LC/G/4/840	GE 21378 LED/DR/D2L/LW	-
1359	Central Plant	Inmate Restroom 14.307	1	43	4' Wraparound; Tamper-Proof Surface Mounted Fluorescent, (2) 48", Super T-8 lamp, Instant Start Ballast, NLO (BF: .85-.95) Prismatic Acrylic Diffuser	1	24	Surface Mounted T8 LED Retrofit Lamp with External Driver LED 4' T8 Lamp (2) 12W Lamps	1		1092	0.04	0.02	63	35	-	GE 34235 LEDT8/LC/G/4/840	GE 21378 LED/DR/D2L/LW	-
1360	Central Plant	Staff Restroom 14.306	1	43	4' Wraparound; Tamper-Proof Surface Mounted Fluorescent, (2) 48", Super T-8 lamp, Instant Start Ballast, NLO (BF: .85-.95) Prismatic Acrylic Diffuser	1	24	Surface Mounted T8 LED Retrofit Lamp with External Driver LED 4' T8 Lamp (2) 12W Lamps	1		1092	0.04	0.02	63	35	-	GE 34235 LEDT8/LC/G/4/840	GE 21378 LED/DR/D2L/LW	-
1361	Central Plant	Tool Storage 14.308	2	43	4' Wraparound; Tamper-Proof Surface Mounted Fluorescent, (2) 48", Super T-8 lamp, Instant Start Ballast, NLO (BF: .85-.95) Prismatic Acrylic Diffuser	2	24	Surface Mounted T8 LED Retrofit Lamp with External Driver LED 4' T8 Lamp (2) 12W Lamps	1		1170	0.09	0.05	135	74	-	GE 34235 LEDT8/LC/G/4/840	GE 21378 LED/DR/D2L/LW	-
1362	Central Plant	Upper Parts Loft	3	232	8' Vapor Proof Surface Mounted Fluorescent, (2) 96", STD HO lamp Prismatic Acrylic Diffuser	3	64	Surface Mounted 8' Vapor Proof LED Light Fixture. (1) 65W			520	0.70	0.19	362	100	FEM L96 9000LM LPPFL MD MVOLT GZ10 40K 80CRI TRS MEZ105299	-	-	-
1363	Central Plant	Coal Pit Stairwell	3	266	Wall-Pack Wall Mounted High Pressure Sodium, (1) 250W lamp Prismatic Acrylic Diffuser	3	51	Wall Mounted Wall-Pack LED Light Fixture. (1) 52W			8760	0.80	0.15	6,997	1,353	RAB WPLED52N	-	-	-
1364	Central Plant	Microniser Room (coal Pit)	5	420	High-Bay Surface Mounted High Pressure Sodium, (1) 400W lamp (No Diffuser)	5	135	Surface Mounted High-Bay LED Light Fixture. (1) 136W - HIGH			8760	2.10	0.67	18,381	5,897	LITHONIA JEBL-18L-40K-80-WH	-	-	LITHONIA LEBLPCLR1

Line #	Facility Area	Space	Pre Fixture Qty	Pre Watts/ Fixt	Pre Description	Post Fixture Qty	Post Watt/ Fixt	Post Description	Wallswitch Sensor	Ceiling Sensor	Hours of Operation	Base kW	Proposed kW	Base kWh	Proposed kWh	Luminaire Part #	Lamp Part #	Driver Part#	Misc. Parts
1365	Pump House Building	Pump House	5	43	4' Strip Surface Mounted Fluorescent, (2) 48", Super T-8 lamp, Instant Start Ballast, NLO (BF: .85-.95) (No Diffuser)	5	24	Surface Mounted T8 LED Retrofit Lamp with External Driver LED 4' T8 Lamp (2) 12W Lamps			200	0.22	0.12	43	24	-	GE 34235 LEDT8/LC/G/4/840	GE 21378 LED/DR/D2L/LW	-
1366	Pump House Building	Water Pit (outside pump house)	2	57	Jelly Jar Surface Mounted Incandescent, (1) 60W lamp Glass Jelly Jar	2	12	Surface Mounted Jelly Jar LED Light Fixture. (1) 12W			200	0.11	0.02	23	5	ECONOLITE E-VTB01A-CM501G	-	-	-
1367	Pole Building	Open Storage Shop	5	238	Flood Light Knuckle fitter 1/2" NPT Halogen Incandescent, (1) 250W lamp Flat Glass Lens	5	26	Knuckle fitter 1/2" NPT Flood Light LED Light Fixture. (1) 26W			520	1.19	0.13	618	67	RAB FFLED26N	-	-	-
1368	Pole Building	Outside Inmate Records	12	87	4' Wraparound; Tamper-Proof Surface Mounted Fluorescent, (4) 48", Super T-8 lamp, Instant Start Ballast, NLO (BF: .85-.95) Prismatic Acrylic Diffuser	12	48	Surface Mounted T8 LED Retrofit Lamp with External Driver LED 4' T8 Lamp (4) 12W Lamps	2		150	1.04	0.57	208	114	-	GE 34235 LEDT8/LC/G/4/840	GE 21379 LED/DR/D4L/LW	-
1369	Lawn Labor Buildng	Open Shop Garage	10	43	4' Vapor Proof; Tamper-Proof Surface Mounted Fluorescent, (2) 48", Super T-8 lamp, Instant Start Ballast, NLO (BF: .85-.95) Prismatic Acrylic Diffuser	10	24	Surface Mounted T8 LED Retrofit Lamp with External Driver LED 4' T8 Lamp (2) 12W Lamps			3640	0.43	0.24	1,577	865	-	GE 34235 LEDT8/LC/G/4/840	GE 21378 LED/DR/D2L/LW	-
1370	Lawn Labor Buildng	Open Shop Garage	2	43	4' Industrial Surface Mounted Fluorescent, (2) 48", Super T-8 lamp, Instant Start Ballast, NLO (BF: .85-.95) (No Diffuser)	2	24	Surface Mounted T8 LED Retrofit Lamp with External Driver LED 4' T8 Lamp (2) 12W Lamps			520	0.09	0.05	45	25	-	GE 34235 LEDT8/LC/G/4/840	GE 21378 LED/DR/D2L/LW	-
1371	Lawn Labor Buildng	Lawn Shop Office	2	43	4' Industrial Surface Mounted Fluorescent, (2) 48", Super T-8 lamp, Instant Start Ballast, NLO (BF: .85-.95) (No Diffuser)	2	24	Surface Mounted T8 LED Retrofit Lamp with External Driver LED 4' T8 Lamp (2) 12W Lamps	1		2730	0.09	0.05	315	173	-	GE 34235 LEDT8/LC/G/4/840	GE 21378 LED/DR/D2L/LW	-
1372	Lawn Labor Buildng	Inmate Restroom	1	43	4' Industrial Surface Mounted Fluorescent, (2) 48", Super T-8 lamp, Instant Start Ballast, NLO (BF: .85-.95) (No Diffuser)	1	24	Surface Mounted T8 LED Retrofit Lamp with External Driver LED 4' T8 Lamp (2) 12W Lamps	1		1092	0.04	0.02	63	35	-	GE 34235 LEDT8/LC/G/4/840	GE 21378 LED/DR/D2L/LW	-
1373	Lawn Labor Buildng	Staff Restroom	1	43	4' Industrial Surface Mounted Fluorescent, (2) 48", Super T-8 lamp, Instant Start Ballast, NLO (BF: .85-.95) (No Diffuser)	1	24	Surface Mounted T8 LED Retrofit Lamp with External Driver LED 4' T8 Lamp (2) 12W Lamps	1		1092	0.04	0.02	63	35	-	GE 34235 LEDT8/LC/G/4/840	GE 21378 LED/DR/D2L/LW	-
1374	Lawn Labor Buildng	Tool Storage	1	43	4' Industrial Surface Mounted Fluorescent, (2) 48", Super T-8 lamp, Instant Start Ballast, NLO (BF: .85-.95) (No Diffuser)	1	24	Surface Mounted T8 LED Retrofit Lamp with External Driver LED 4' T8 Lamp (2) 12W Lamps			1560	0.04	0.02	68	37	-	GE 34235 LEDT8/LC/G/4/840	GE 21378 LED/DR/D2L/LW	-
1375	Lawn Labor Buildng	Lawn Equipment Garage	3	43	4' Industrial Surface Mounted Fluorescent, (2) 48", Super T-8 lamp, Instant Start Ballast, NLO (BF: .85-.95) (No Diffuser)	3	24	Surface Mounted T8 LED Retrofit Lamp with External Driver LED 4' T8 Lamp (2) 12W Lamps			1560	0.13	0.07	203	111	-	GE 34235 LEDT8/LC/G/4/840	GE 21378 LED/DR/D2L/LW	-

SAVINGS CALCULATION

ECM-3.1 Compressed Natural Gas Conversion

SCI Houtzdale	**ECM- 3a** (3.1)
Compressed Natural Gas (CNG) Conversion	

Description	Estimated Annual Consumption		Estimated Annual Cost
Existing Boilers - Fuel	87,861	mmBtu	$ 1,099,250
Existing Boilers - Electricity	2,291,593	kWh	$ 171,869
Proposed Boilers - Fuel	87,861	mmBtu	$ 793,826
Proposed Boilers - Electricity	1,986,628	kWh	$ 148,997

Description	Estimated Annual Energy Savings		Estimated Annual Savings
Proposed Savings - Fuel	-	mmBtu	$ 305,424
Proposed Savings - Electricity	304,965	kWh	$ 22,872
Proposed Savings - Energy	**1,041**	**mmBtu**	**$ 328,296**

Assumptions Option 1 & Option 2

1) Existing Fuel Unit Cost is $12.51/mmBtu (Based on 2018 Costs)
2) Proposed Fuel Unit Cost is $ 9.035/mmBtu
3) Boiler Efficiency remains the same (assumes boilers available @ 78%).
4) Coal Boiler fans, blowers and micronizers eliminated
5) Total boiler fuel quantity (mmBtu) is unchanged with this model.
6) Propane backup fuel and blending not included.

SCI Houtzdale - Existing Heating Model

Gas Cost ($/mmBtu) $ 9.04

Date			Boiler Input	Combustion	Boiler Ouput	DA Usage	Plant Steam (HW & Stm)	Kitchen & Laundry Steam	Plant HW HX	HW HX Losses (3)	UG Pipe Losses (HW) (1)	Delivered to Bldg	DHW	Bldg HW HX Losses (3)	Space Heating Load
			(mmBtu)	(mmBtu)	(mmBtu)	(mmBtu)	(mmBtu)	(mmBtu)	(mmBtu)	(mmBtu)	(mmbtu)	(mmbtu)	(mmBtu)	(mmBtu)	(mmBtu)
1/1/2018	$	113,450	12,557	N/A	9,794	546	**9,248**	1,168	**8,080**	808	261	**7,011**	889	58	6,064
2/1/2018	$	90,595	10,027	N/A	7,821	449	**7,372**	1,099	**6,273**	627	253	**5,392**	803	52	4,537
3/1/2018	$	95,142	10,530	N/A	8,214	478	**7,736**	1,236	**6,499**	650	261	**5,588**	889	58	4,641
4/1/2018	$	76,550	8,473	N/A	6,609	388	**6,220**	1,271	**4,950**	495	259	**4,196**	860	56	3,280
5/1/2018	$	51,055	5,651	N/A	4,408	281	**4,127**	1,435	**2,692**	269	250	**2,173**	889	58	1,226
6/1/2018	$	46,305	5,125	N/A	3,998	244	**3,754**	1,416	**2,338**	234	248	**1,856**	860	56	940
7/1/2018	$	47,047	5,207	N/A	4,062	245	**3,817**	1,471	**2,346**	235	250	**1,862**	889	58	915
8/1/2018	$	44,804	4,959	N/A	3,868	270	**3,598**	1,445	**2,153**	215	250	**1,687**	889	58	740
9/1/2018	$	44,558	4,932	N/A	3,847	241	**3,606**	1,419	**2,187**	219	248	**1,720**	860	56	804
10/1/2018	$	54,706	6,055	N/A	4,723	298	**4,425**	1,418	**3,007**	301	250	**2,457**	889	58	1,510
11/1/2018	$	74,549	8,251	N/A	6,436	392	**6,043**	1,267	**4,777**	478	259	**4,041**	860	56	3,124
12/1/2018	$	78,730	8,714	N/A	6,797	408	**6,389**	1,306	**5,083**	508	261	**4,313**	889	58	3,366
Totals	**$**	**817,490**	**90,480**	19,906	**70,575**	**4,240**	**66,335**	**15,951**	**50,384**	**5,038**	**3,049**	**42,296**	**10,469**	**681**	**31,146**
Percent of Total (Based on Boiler Input)				22.0%		4.7%		17.6%	55.7%	5.6%	3.4%	46.7%	11.6%		34.4%
Percent of Total (Based on Boiler Output)						6.0%		22.6%	71.4%	7.1%	4.3%	59.9%	14.8%		44.1%

Boiler Combustion Eff. (2) 78%

System Eff. 64%

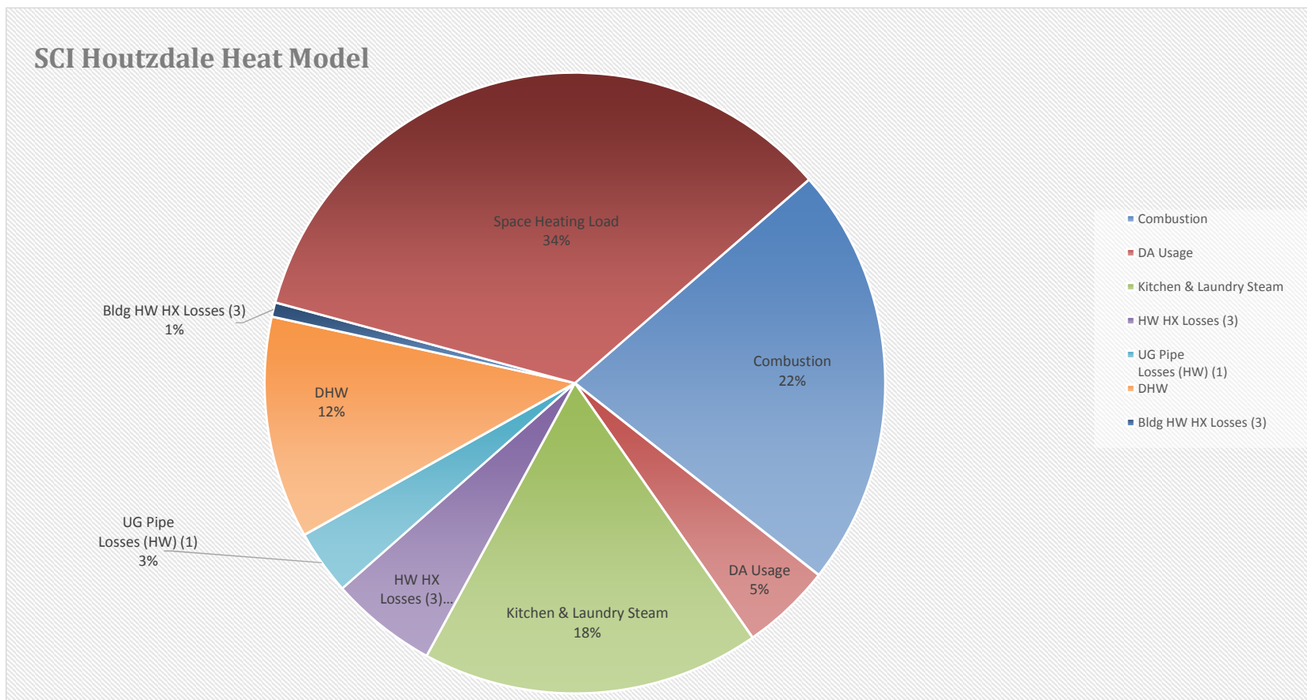

Notes

1) Combined thermal and mass losses for UG HW distribution.
2) Estimated average plant combustion efficiency based on annual combined coal and oil fired boiler operations.
3) Plant steam-to-HW heat exchangers estimated efficiency : 90%, Building HW-to-HW heat exchangers estimated effeciency : 93.5%

2018 Summary

Total Fuel Cost	$1,099,250	
Fuel Cost ($/mmBtu)	$12.51	
Existing Fuel (mmBtu)	87,861	
CNG Annual Cost	$793,826	(assumes CNG at $9.035/mmbtu)
Savings	$305,424	
Proposed Fuel (mmBtu)	**87,861**	

SCI Houtzdale - 2018 Fuel Consumption and Steam Production Summary - ECM 3a

Date	Coal Usage (Tons)	Coal Unit Cost ($/Ton)	Coal Total Cost ($)	Steam from Coal (Lbs)	Oil Usage (Gal)	Oil Unit Cost ($/Gal)	Oil Total Cost ($)	Steam from Oil (Lbs)	Fuel Input (mmBTUs)	Boiler Output (mmBTU)
January-18	324	$98.53	$31,902	6,808,110	27,687	$2.14	$59,250	2,986,106	11,616	9,794
February-18	288	$98.53	$28,389	6,127,955	16,544	$2.08	$34,412	1,693,235	9,206	7,821
March-18	309	$97.93	$30,303	6,487,186	16,008	$1.96	$31,376	1,726,499	9,636	8,214
April-18	37	$97.83	$3,610	800,000	53,857	$2.06	$110,945	5,808,599	8,357	6,609
May-18			$0		40,867	$2.09	$85,412	4,407,599	5,668	4,408
June-18			$0		37,065	$2.06	$76,354	3,997,544	5,141	3,998
July-18			$0		37,659	$2.06	$77,578	4,061,608	5,223	4,062
August-18			$0		35,883	$2.03	$72,842	3,868,000	4,977	3,868
September-18			$0		35,667	$2.26	$80,607	3,846,764	4,947	3,847
October-18			$0		43,794	$2.26	$98,974	4,722,801	6,074	4,723
November-18			$0		59,673	$2.26	$134,861	6,435,862	8,276	6,436
December-18			$0		63,024	$2.26	$142,434	6,796,798	8,741	6,797
Totals	958		$94,204	20,223,251	467,728		$1,005,046	50,351,415	87,861	70,575

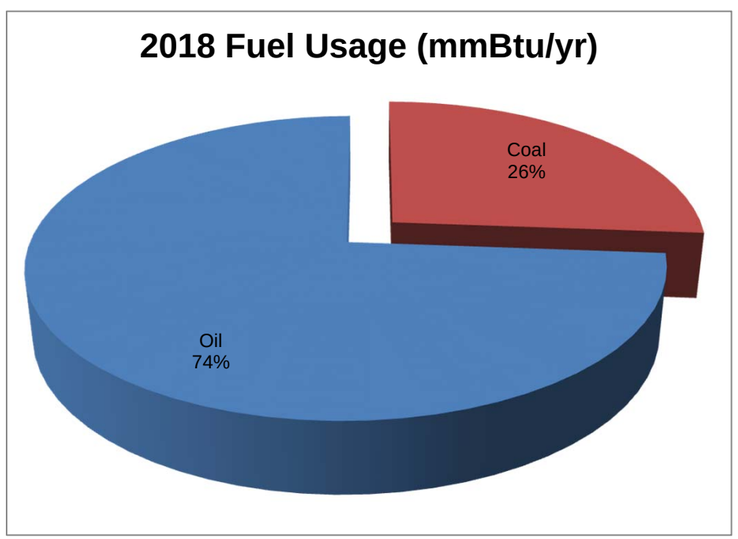

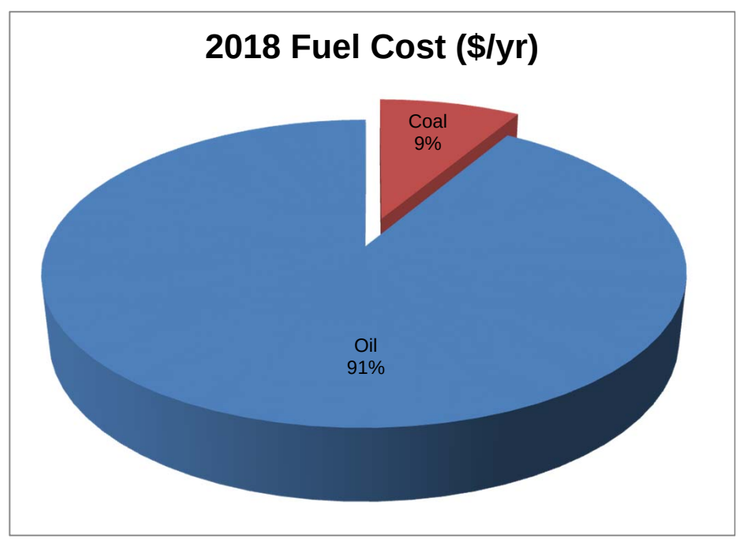

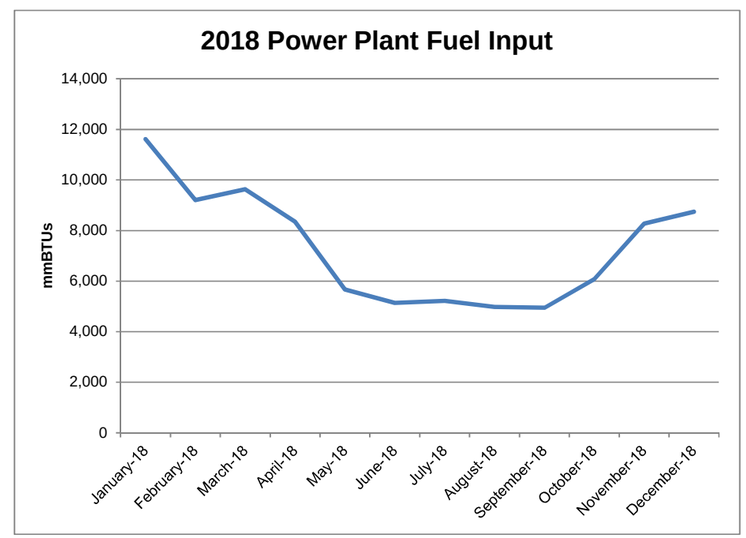

Houtzdale Motor Model - Existing Energy Usage - ECM 3a

Description	HP		
Feedwater Pump	25	As needed, No VFD	Each operates half the year. Lead lag
Feedwater Pump	25	As needed, No VFD	Each operates half the year. Lead lag
Feedwater Pump	10	Always on	
Pri HW Dist. Pump	7.5		
Pri HW Dist. Pump	7.5		
Pri HW Dist. Pump	7.5		
Sec HW Dist. Pump	7.5		Central Plant to Admin and Building H
Sec HW Dist. Pump	150		Central Plant to building 5
Ter HW Dist Pump	125		Building 5 to remainder.
Coal Boiler FD Fan	20		Coal boiler only operates 3 months per year (8760 x .25). Assume only 1 boiler operates.
Coal Boiler FD Fan	20		
Coal Boiler ID Fan	60		Coal boiler only operates 3 months per year (8760 x .25). Assume only 1 boiler operates.
Coal Boiler ID Fan	20		
CB Boiler Burner	75		Assume runs 5 months (April, September, October, November, December)
KWN Boiler Burner	75		Assumed to run Summer (May, June, July, August)
Condensate Return	5		
Condensate Return	5		
Coal Blower	20		Coal boiler only operates 3 months per year (8760 x .25). Assume only 1 boiler operates.
Coal Blower	20		
Coal Micronizer	150		1 for each coal boiler
Coal Micronizer	150		
Pneumatic Air Comp.	40		

Houtzdale - Existing Motor Energy Use

	HP	Number	Total HP	KW / HP	VFD	Total KW	% Max Load	Baseline Eff.	KW	Hours Operating	kWh	Demand Total (kW)	Annual Total (kWh)	Average Hourly Load (kWh)
Feedwater Pump	25	1	25	0.746		18.65	80%	75%	19.89	4380	87,133			
Feedwater Pump	25	1	25	0.746		18.65	80%	75%	19.89	4380	87,133			
Feedwater Pump	10	1	10	0.746		7.46	80%	75%	7.96	8760	69,706			
Pri HW Dist. Pump	7.5	1	7.5	0.746		5.595	80%	75%	5.97	4380	26,140			
Pri HW Dist. Pump	7.5	1	7.5	0.746		5.595	80%	75%	5.97	4380	26,140			
Pri HW Dist. Pump	7.5	0	0	0.746		0	80%	75%	0.00	0	-			
Sec HW Dist. Pump (3 & 4)	7.5	1	7.5	0.746	yes	5.595	80%	75%	5.97	4380	26,140			
Sec HW Dist. Pump (3 & 4)	7.5	1	7.5	0.746	yes	5.595	80%	75%	5.97	4380	26,140	294	1,324,419	151
Sec HW Dist. Pump (1 & 2)	150	1	150	0.746	yes	111.9	40%	75%	59.68	4380	261,398			
Sec HW Dist. Pump (1 & 2)	150	1	150	0.746	yes	111.9	40%	75%	59.68	4380	261,398			
Ter HW Dist Pump	125	1	125	0.746	yes	93.25	40%	75%	49.73	4380	217,832			
Ter HW Dist Pump	125	1	125	0.746	yes	93.25	40%	75%	49.73	4380	217,832			
Condensate Return	5	1	5	0.746		3.73	80%	75%	3.98	4380	17,427			
Condensate Return	5	0	0	0.746		0	80%	75%	0.00	0	-			
FD Fan	20	1	20	0.746		14.92	80%	75%	15.91	1095	17,427			
FD Fan	20	1	20	0.746		14.92	80%	75%	15.91	1095	17,427			
ID Fan	60	1	60	0.746		44.76	80%	75%	47.74	1095	52,280			
ID Fan	60	1	60	0.746		44.76	80%	75%	47.74	1095	52,280	279	566,363	65
CB Boiler Burner	75	1	75	0.746		55.95	80%	75%	59.68	3650	217,832			
KWN Boiler Burner	75	1	75	0.746		55.95	80%	75%	59.68	2920	174,266			
Coal Blower	20	1	20	0.746		14.92	80%	75%	15.91	1095	17,427			
Coal Blower	20	1	20	0.746		14.92	80%	75%	15.91	1095	17,427			
Coal Micronizer	150	1	150	0.746		111.9	80%	75%	119.36	1095	130,699	239	261,398	30
Coal Micronizer	150	1	150	0.746		111.9	80%	75%	119.36	1095	130,699			
Pneumatic Air Comp.	40	1	40	0.746		29.84	80%	75%	31.83	4380	139,412	32	139,412	16
									843.48		2,291,593		**2,291,593**	
								Demand for 12 months	10,121.73					

Electric Model

Month	Hrs/Month	Days per Month	Pumps kWh	Fans kWh	Micronizer & Comp kWh	
January	744	31	112,485	48,102	34,041	
February	672	28	101,599	43,447	30,747	
March	744	31	112,485	48,102	34,041	
April	720	30	108,856	46,550	32,943	
May	744	31	112,485	48,102	34,041	
June	720	30	108,856	46,550	32,943	
July	744	31	112,485	48,102	34,041	
August	744	31	112,485	48,102	34,041	
September	720	30	108,856	46,550	32,943	
October	744	31	112,485	48,102	34,041	
November	720	30	108,856	46,550	32,943	
December	744	31	112,485	48,102	34,041	
Total			**1,324,419**	**566,363**	**400,811**	**2,291,593**
						$0.075
						$171,869

ECM 3a - CNG conversion Proposed Model

Savings (kwh)	304,965
Unit Cost ($/kWh)	$0.075
Savings ($)	$22,872

Houtzdale - Proposed Motor Energy Use

	HP	Number	Total HP	KW / HP	VFD	Total KW	% Max Load	Baseline Eff.	KW	Hours Operating	kWh	Demand Total (kW)	Annual Total (kWh)	Average Hourly Load (kWh)
Feedwater Pump	25	1	25	0.746		18.65	80%	75%	19.89	4380	87,133			
Feedwater Pump	25	1	25	0.746		18.65	80%	75%	19.89	4380	87,133			
Feedwater Pump	10	1	10	0.746		7.46	80%	75%	7.96	8760	69,706			
Pri HW Dist. Pump	7.5	1	7.5	0.746		5.595	80%	75%	5.97	4380	26,140			
Pri HW Dist. Pump	7.5	1	7.5	0.746		5.595	80%	75%	5.97	4380	26,140			
Pri HW Dist. Pump	7.5	0	0	0.746		0	80%	75%	0.00	0	-			
Sec HW Dist. Pump (3 & 4)	7.5	1	7.5	0.746	yes	5.595	80%	75%	5.97	4380	26,140			
Sec HW Dist. Pump (3 & 4)	7.5	1	7.5	0.746	yes	5.595	80%	75%	5.97	4380	26,140	294	1,324,419	151
Sec HW Dist. Pump (1 & 2)	150	1	150	0.746	yes	111.9	40%	75%	59.68	4380	261,398			
Sec HW Dist. Pump (1 & 2)	150	1	150	0.746	yes	111.9	40%	75%	59.68	4380	261,398			
Ter HW Dist Pump	125	1	125	0.746	yes	93.25	40%	75%	49.73	4380	217,832			
Ter HW Dist Pump	125	1	125	0.746	yes	93.25	40%	75%	49.73	4380	217,832			
Condensate Return	5	1	5	0.746		3.73	80%	75%	3.98	4380	17,427			
Condensate Return	5	0	0	0.746		0	80%	75%	0.00	0	-			
FD Fan	20	1	20	0.746		14.92	80%	75%	15.91	0	-			
FD Fan	20	1	20	0.746		14.92	80%	75%	15.91	0	-			
ID Fan	60	1	60	0.746		44.76	80%	75%	47.74	0	-			
ID Fan	60	1	60	0.746		44.76	80%	75%	47.74	0	-	279	522,797	60
CB Boiler Burner	75	1	75	0.746		55.95	80%	75%	59.68	5840	348,531			
KWN Boiler Burner	75	1	75	0.746		55.95	80%	75%	59.68	2920	174,266			
Coal Blower	20	1	20	0.746		14.92	80%	75%	15.91	0	-			
Coal Blower	20	1	20	0.746		14.92	80%	75%	15.91	0	-			
Coal Micronizer	150	1	150	0.746		111.9	80%	75%	119.36	0	-	239	-	-
Coal Micronizer	150	1	150	0.746		111.9	80%	75%	119.36	0	-			
Pneumatic Air Comp.	40	1	40	0.746		29.84	80%	75%	31.83	4380	139,412	32	139,412	16
									843.48		1,986,628		**1,986,628**	
								Demand for 12 months	10,121.73					

Electric Model

Month	Hrs/Month	Days per Month	Pumps kWh	Fans kWh	Micronizer & Comp kWh	
January	744	31	112,485	44,402	11,841	
February	672	28	101,599	40,105	10,695	
March	744	31	112,485	44,402	11,841	
April	720	30	108,856	42,970	11,459	
May	744	31	112,485	44,402	11,841	
June	720	30	108,856	42,970	11,459	
July	744	31	112,485	44,402	11,841	
August	744	31	112,485	44,402	11,841	
September	720	30	108,856	42,970	11,459	
October	744	31	112,485	44,402	11,841	
November	720	30	108,856	42,970	11,459	
December	744	31	112,485	44,402	11,841	
Total			**1,324,419**	**522,797**	**139,412**	**1,986,628**
						$0.075
						$148,997

Assumtions
New Equipment and Pumps included in ECM 3b

SAVINGS CALCULATION

ECM-3.2 Steam Plant Upgrades
ECM 3.3 Hot Water Plant Upgrades

SCI Houtzdale	(3.2 & 3.3)
Hot Water Boiler Conversion, New Steam Boilers Central Plant For Laundry and Kitchen, DHW Unchanged	

Description	Estimated Annual		Estimated Annual Cost	
Existing Boilers - Fuel	90,480	mmBtu	$	817,490
Existing Boilers - Electricity	2,291,593	kWh	$	171,869
Proposed Boiler - Fuel	74,609	mmBtu	$	674,094
Proposed Boiler - Electricity	1,359,272	kWh	$	101,945

Description	Estimated Annual		Estimated Annual Savings	
Proposed Savings - Fuel	15,871	mmBtu	$	143,396
Proposed Savings - Electricity	932,321	kWh	$	69,924
Proposed Savings Energy	**19,053**	**mmBtu**	**$**	**213,320**

Assumptions

1) Convert central plant CB boiler to HW @ 82% efficiency (use as backup boiler)
2) Operate central plant new steam boiler(s) for Kitchen and Laundry. Increase in combustion
3) Operate new HW boilers in central plant, no reduction in loop temperature (180°F).
4) Assumes coal equipment electric savings were captured with the CNG ECM model.
5) Installation of two new 350HP HW boilers in central plant. Fuel to water efficiency of 85%.
6) Fuel to steam efficiency of 82%.

Note: TEN is utilizing a lower HW boiler efficiency figure for guarantee purposes. Savings of 15,435 mmBtu will be utilized.

SCI Houtzdale - Existing Heating Model

Gas Cost ($/mmBtu) $ 9.04

Date			Boiler Input	Combustion	Boiler Ouput	DA Usage	Plant Steam (HW & Stm)	Kitchen & Laundry Steam	Plant HW HX	HW HX Losses (3)	UG Pipe Losses (HW) (1)	Delivered to Bldg	DHW	Bldg HW HX Losses (3)	Space Heating Load
			(mmBtu)	(mmBtu)	(mmBtu)	(mmBtu)	(mmBtu)	(mmBtu)	(mmBtu)	(mmBtu)	(mmbtu)	(mmbtu)	(mmBtu)	(mmBtu)	(mmBtu)
1/1/2018	$	113,450	12,557	N/A	9,794	546	**9,248**	1,168	**8,080**	808	261	**7,011**	889	58	6,064
2/1/2018	$	90,595	10,027	N/A	7,821	449	**7,372**	1,099	**6,273**	627	253	**5,392**	803	52	4,537
3/1/2018	$	95,142	10,530	N/A	8,214	478	**7,736**	1,236	**6,499**	650	261	**5,588**	889	58	4,641
4/1/2018	$	76,550	8,473	N/A	6,609	388	**6,220**	1,271	**4,950**	495	259	**4,196**	860	56	3,280
5/1/2018	$	51,055	5,651	N/A	4,408	281	**4,127**	1,435	**2,692**	269	250	**2,173**	889	58	1,226
6/1/2018	$	46,305	5,125	N/A	3,998	244	**3,754**	1,416	**2,338**	234	248	**1,856**	860	56	940
7/1/2018	$	47,047	5,207	N/A	4,062	245	**3,817**	1,471	**2,346**	235	250	**1,862**	889	58	915
8/1/2018	$	44,804	4,959	N/A	3,868	270	**3,598**	1,445	**2,153**	215	250	**1,687**	889	58	740
9/1/2018	$	44,558	4,932	N/A	3,847	241	**3,606**	1,419	**2,187**	219	248	**1,720**	860	56	804
10/1/2018	$	54,706	6,055	N/A	4,723	298	**4,425**	1,418	**3,007**	301	250	**2,457**	889	58	1,510
11/1/2018	$	74,549	8,251	N/A	6,436	392	**6,043**	1,267	**4,777**	478	259	**4,041**	860	56	3,124
12/1/2018	$	78,730	8,714	N/A	6,797	408	**6,389**	1,306	**5,083**	508	261	**4,313**	889	58	3,366
Totals	**$**	**817,490**	**90,480**	19,906	**70,575**	**4,240**	**66,335**	**15,951**	**50,384**	**5,038**	**3,049**	**42,296**	**10,469**	**681**	**31,146**
Percent of Total (Based on Boiler Input)				22.0%		4.7%		17.6%	55.7%	5.6%	3.4%	46.7%	11.6%		34.4%
Percent of Total (Based on Boiler Output)						6.0%		22.6%	71.4%	7.1%	4.3%	59.9%	14.8%		44.1%

Boiler Combustion Eff. (2) 78%

System Eff. 64%

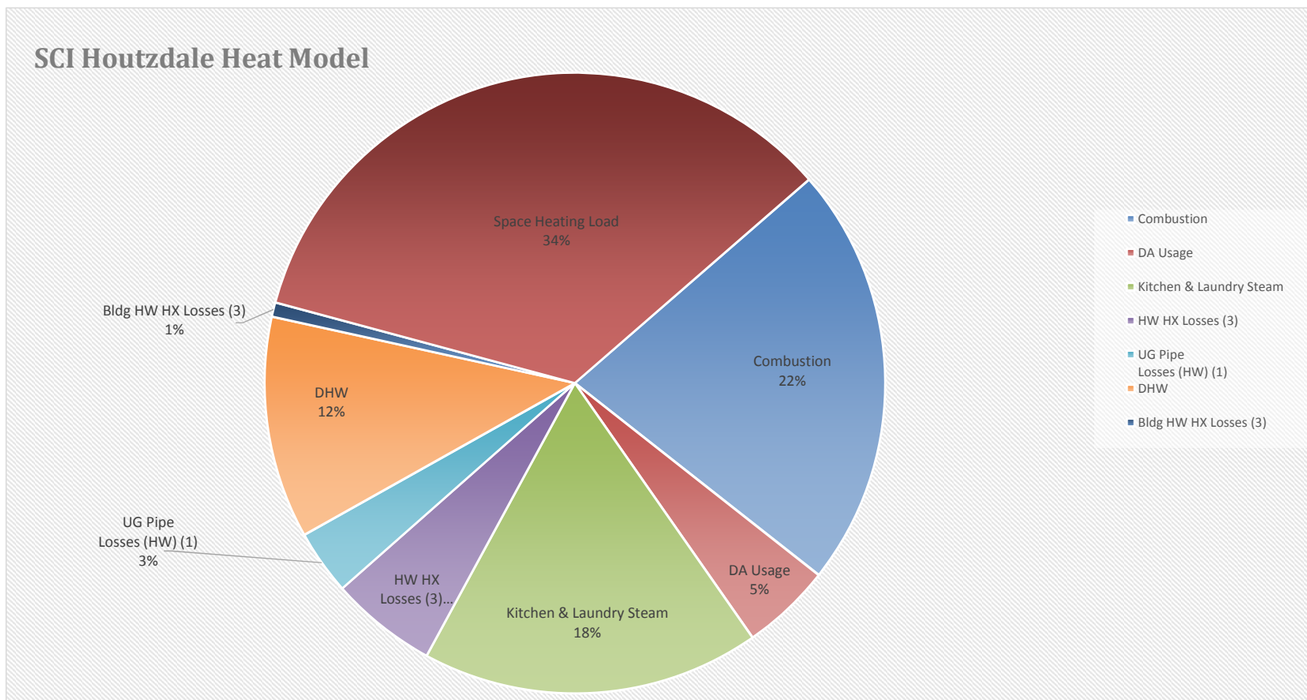

Notes

1) Combined thermal and mass losses for UG HW distribution.
2) Estimated average plant combustion efficiency based on annual combined coal and oil fired boiler operations.
3) Plant steam-to-HW heat exchangers estimated efficiency : 90%, Building HW-to-HW heat exchangers estimated effeciency : 93.5%

ECM-3.2 & 3.3

Convert CB to HW and New Steam Plant In Central Plant for Kitchen and Laundry

Based on 2018 Fuel Consumption

Gas Cost ($/mmBtu) $ 9.04

Date			Boiler Input (mmbtu)	HW Boiler Input (mmBtu)	Steam Boiler Input (mmBtu)	Steam Boiler Ouput (mmBtu)	DA Usage (mmBtu)	UG Pipe Losses (3) (mmBtu)	Kitchen & Laundry Steam (mmBtu)	Plant HW HX (mmBtu)	HW HX Losses (mmBtu)	CB HW Boiler Output (mmBtu)	HW for CHW Freeze Protect (mmBtu)	UG Pipe Losses (HW) (mmbtu)	Delivered to Bldg (mmbtu)	DHW (mmBtu)	Bldg HW HX Losses (mmBtu)	Space Heating Load (mmBtu)
January	$	91,702	10,150	8,599	1,551	1,272	72	32	1,168			7,309	37	261	**7,011**	889	58	6,064
February	$	73,536	8,139	6,681	1,458	1,195	68	28	1,099			5,679	33	253	**5,392**	803	52	4,537
March	$	77,380	8,564	6,925	1,639	1,344	76	32	1,236			5,887	37	261	**5,588**	889	58	4,641
April	$	62,547	6,923	5,241	1,682	1,379	78	31	1,271			4,455	-	259	**4,196**	860	56	3,280
May	$	42,867	4,745	2,851	1,894	1,553	88	30	1,435			2,423	-	250	**2,173**	889	58	1,226
June	$	39,247	4,344	2,475	1,869	1,532	87	29	1,416			2,104	-	248	**1,856**	860	56	940
July	$	39,977	4,425	2,484	1,940	1,591	90	30	1,471			2,112	-	250	**1,862**	889	58	915
August	$	37,830	4,187	2,279	1,908	1,564	89	30	1,445			1,937	-	250	**1,687**	889	58	740
September	$	37,835	4,188	2,315	1,872	1,535	87	29	1,419			1,968	-	248	**1,720**	860	56	804
October	$	45,686	5,057	3,184	1,872	1,535	87	30	1,418			2,707	-	250	**2,457**	889	58	1,510
November	$	60,847	6,735	5,058	1,677	1,375	78	31	1,267			4,299	-	259	**4,041**	860	56	3,124
December	$	64,640	7,154	5,425	1,729	1,418	80	32	1,306			4,611	37	261	**4,313**	889	58	3,366
Totals	**$**	**674,094**	**74,609**	**53,518**	**21,091**	**17,295**	**979**	**365**	**15,951**			**45,490**	**145**	**3049**	**42,296**	**10,469**	**681**	**31,146**
				71.7%	28.3%											-		

HW Boiler Combustion Eff.		85%
Steam Boiler Comb Eff.		82%
System Eff.	77%	
Fuel Savings	**$ 143,396**	

Assumptions

1) Convert central plant CB boiler to HW
2) Operate new steam boiler(s) in central plant for Kitchen and Laundry
3) Operate new HW boilers in central plant, no reduction in loop temperature (180°F).
4) Assumes coal equipment electric savings were captured with the CNG ECM model.
5) Assumes installation of two new 350HP HW boilers in central plant. Assumes boiler combustion efficiency is 85%

	Temperature (°F)	Turbine Efficiency	Pressure (Psig)	Enthalpy (Btu/lbm)
Boiler Steam			100	1192
Turbine Outlet		0%	0	1022
Feedwater	230	N/A	N/A	198
Low Pressure Condensate	180	N/A	N/A	148
High Pressure Condensate	250	N/A	N/A	218
Cochrane Valve	227	N/A	5	1156
DA Steam	227	N/A	5	1156
Auxillary Steam	227	N/A	5	1156
Makeup Water	60	N/A	N/A	28

Gray Cells are calculated

Percent Blow Down = 4%

Month	Load (lbs)	HPC Return (lbs)	HPC Return (%)	LPC Return (lbs)	LPC Return (%)	Feedwater (lbs)	Dearator (lbs)	Dearator (%)	Makeup (lbs)	Makeup (%)	Actual Makeup (lbs)
Jan-18	9,794,216	0	0%	8,741,887	89.3%	10,202,308	546,091	5.6%	506,238	5.2%	506,238
Feb-18	7,821,190	0	0%	6,858,297	87.7%	8,147,073	449,119	5.7%	513,774	6.6%	513,774
Mar-18	8,213,685	0	0%	7,144,561	87.0%	8,555,922	477,818	5.8%	591,306	7.2%	591,306
Apr-18	6,608,599	0	0%	5,711,487	86.4%	6,883,957	388,372	5.9%	508,740	7.7%	508,740
May-18	4,407,599	0	0%	3,605,665	81.8%	4,591,249	280,684	6.4%	521,250	11.8%	521,250
Jun-18	3,997,544	0	0%	3,371,808	84.3%	4,164,108	243,764	6.1%	381,972	9.6%	381,972
Jul-18	4,061,608	0	0%	3,453,227	85.0%	4,230,842	244,757	6.0%	363,624	9.0%	363,624
Aug-18	3,868,000	0	0%	2,941,639	76.1%	4,029,167	270,003	7.0%	656,358	17.0%	656,358
Sep-18	3,846,764	0	0%	3,182,776	82.7%	4,007,046	241,150	6.3%	422,838	11.0%	422,838
Oct-18	4,722,801	0	0%	3,894,032	82.5%	4,919,584	297,511	6.3%	531,258	11.2%	531,258
Nov-18	6,435,862	0	0%	5,428,791	84.4%	6,704,023	392,413	6.1%	614,658	9.6%	614,658
Dec-18	6,796,798	0	0%	5,793,289	85.2%	7,079,998	408,033	6.0%	595,476	8.8%	595,476
	70,574,666	**0**		**60,127,459**			**4,239,715**		**6,207,492**		**6,207,492**

Month	Peak Load (lbs)	Feedwater (lbs)	Feedwater (GPM)
Jan-18	9,794,216	10,202,308	2.3
Feb-18	7,821,190	8,147,073	24.2
Mar-18	8,213,685	8,555,922	19.7
Apr-18	6,608,599	6,883,957	1.6
May-18	4,407,599	4,591,249	12.3
Jun-18	3,997,544	4,164,108	11.2
Jul-18	4,061,608	4,230,842	1.0
Aug-18	3,868,000	4,029,167	12.0
Sep-18	3,846,764	4,007,046	10.8
Oct-18	4,722,801	4,919,584	15.3
Nov-18	6,435,862	6,704,023	20.9
Dec-18	6,796,798	7,079,998	22.0

Daily Steam 85.0

Kitchen, Laundry & Showers

Month	Hrs/Month	Days per Month	Plant Steam (HW & Stm) (mmBtu)	Daily Steam (1) (kLbs/Day)	Total for Kitch, Laund & DHW mmBtu	DHW Heat Load (2) mmBtu	DA Steam mmBtu	UG Pipe Losses (3) mmBtu	Total for Kitch, Laund mmBtu
January	744	31	**9,248**	85	2,635	889	546	31.53	1,168
February	672	28	**7,372**	85	2,380	803	449	28.48	1,099
March	744	31	**7,736**	85	2,635	889	478	31.53	1,236
April	720	30	**6,220**	85	2,550	860	388	30.51	1,271
May	744	31	**4,127**	85	2,635	889	281	30.46	1,435
June	720	30	**3,754**	85	2,550	860	244	29.48	1,416
July	744	31	**3,817**	85	2,635	889	245	30.46	1,471
August	744	31	**3,598**	85	2,635	889	270	30.46	1,445
September	720	30	**3,606**	85	2,550	860	241	29.48	1,419
October	744	31	**4,425**	85	2,635	889	298	30.46	1,418
November	720	30	**6,043**	85	2,550	860	392	30.51	1,267
December	744	31	**6,389**	85	2,635	889	408	31.53	1,306
Total			**66,335**		**31,025**	**10,469**	**4,240**	**364.9**	**15,951**

Notes

1) Daily steam estimated, using selected daily steam log hourly steam flow data and determining the space heating base heat load from periods of low Laundry, Kitchen and DHW use (night time, 12pm, etc) and applying the hourly total over each month.
2) Domestic Hot Water usage estimated using ASHRAE guidelines for number of gallons/person based on motels and Senior High Schools for the majority of buildings and their occupancy.
3) UG Pipe Losses estimated using Underground Steam Pipe Losses

Pipe Losses - Thermal HW Dist Losses

Foam with HDPE Jacket

	k value	Thickness (Inches)	R Value
HW	0.16	2.6	16.25
Air Film			0.61
			16.86

Tunnel

	Summer	Winter
HW Temperature (°F)	180	190
Direct Buried Temperature (°F)	55	45

Tunnel Pipe Sizes

Diameter (inch)	Line Length (ft)	Winter Losses (Btu/hr)	Summer Losses (Btu/hr)
16		0	0
14		0	0
12		0	0
10		0	0
8	0	0	0
6	8,000	108,074	93,167
3		0	0
	TOTAL	**108,074**	**93,167**

Q=DπL(T1-T2)/(Insulation Thickness)/k

UG Pipe Loss Annual Profile

Month	Hrs/Month	Losses mmBtu
January	744	80.41
February	672	72.63
March	744	80.41
April	720	77.81
May	744	69.32
June	720	67.08
July	744	69.32
August	744	69.32
September	720	67.08
October	744	69.32
November	720	77.81
December	744	80.41
Total		**880.90**

Pipe Losses - Thermal Steam Dist Losses

Class A with Mineral Wool

	k value	Thickness (Inches)	R Value
Steam	0.33	2	6.06
Air Film			0.61
			6.67

Tunnel

	Summer	Winter
120 psi Steam Temperature (°F)	340	340
Direct Buried Temperature (°F)	55	45

Tunnel Pipe Sizes

Diameter (inch)	Line Length (ft)	Winter Losses (#/hr)	Summer Losses (#/hr)
16		0	0
14		0	0
12		0	0
10		0	0
8		0	0
6	610	42	41
3		0	0
	TOTAL	**42**	**41**

Q=DπL(T1-T2)/(Insulation Thickness)/k

	Winter Losses (#/hr)	**Summer Losses (#/hr)**	**Total Losses (#/hr)**

UG Steam Pipe Loss Annual Profile

Month	Hrs/Month	Losses mmBtu
January	744	31.53
February	672	28.48
March	744	31.53
April	720	30.51
May	744	30.46
June	720	29.48
July	744	30.46
August	744	30.46
September	720	29.48
October	744	30.46
November	720	30.51
December	744	31.53
Total		**364.86**

Hot Water

Date	Leak (Gallons)	GPM	Leaks (lbs)	Btu/hr	
Jan-17					
Feb-17					
Mar-17					
Apr-17					
May-17					
Jun-17					
Jul-17	1,841	0.04	15,354	2,522	
Aug-17	2,186	0.05	18,231	2,995	
Sep-17	22	0.00	183	30	
Oct-17	228	0.01	1,902	312	
Nov-17	398	0.01	3,319	545	
Dec-17	226	0.01	1,885	310	
Jan-18	358	0.01	2,986	490	
Feb-18	1,450	0.03	12,093	1,986	
Mar-18	134,005	3.06	1,117,602	183,568	
Apr-18	166,704	3.81	1,390,311	228,362	
May-18	181,067	4.13	1,510,099	248,037	247,548
Jun-18	191,438	4.37	1,596,593	262,244	
Jul-18	230,338	5.26	1,921,019	315,532	

Chilled Water

Date	Leak (Gallons)	GPM	Leaks (lbs)	Btu/hr
Jan-17				
Feb-17				
Mar-17				
Apr-17				
May-17				
Jun-17				
Jul-17	18,500	0.42	154,290	3,801
Aug-17	56,600	1.29	472,044	11,630
Sep-17	68,400	1.56	570,456	14,055
Oct-17	59,800	1.37	498,732	12,288
Nov-17	-	-	-	-
Dec-17	-	-	-	-
Jan-18	-	-	-	-
Feb-18	-	-	-	-
Mar-18	-	-	-	-
Apr-18	-	-	-	-
May-18	79,200	1.81	660,528	16,274
Jun-18	84,800	1.94	707,232	17,425
Jul-18	95,800	2.19	798,972	19,685

Steam to HW HX Losses - Annual Profile

Month	Hrs/Month	Plant HW HX mmBtu	Heat Exchanger Losses (%)	Heat Exchanger Losses mmBtu
January	744	8,080	10.0%	808
February	672	6,273	10.0%	627
March	744	6,499	10.0%	650
April	720	4,950	10.0%	495
May	744	2,692	10.0%	269
June	720	2,338	10.0%	234
July	744	2,346	10.0%	235
August	744	2,153	10.0%	215
September	720	2,187	10.0%	219
October	744	3,007	10.0%	301
November	720	4,777	10.0%	478
December	744	5,083	10.0%	508
Total		**50,384**		**5,038**
				10%

Assumed Effeciency	
Steam to HW Shell & Tube HX	90.0%
HW to HW Shell & Tube HX	93.5%

HW to HW HX Losses - Annual Profile

Month	Hrs/Month	Domestic HW mmBtu	Heat Exchanger Losses (%)	Heat Exchanger Losses mmBtu
January	744	889	6.5%	58
February	672	803	6.5%	52
March	744	889	6.5%	58
April	720	860	6.5%	56
May	744	889	6.5%	58
June	720	860	6.5%	56
July	744	889	6.5%	58
August	744	889	6.5%	58
September	720	860	6.5%	56
October	744	889	6.5%	58
November	720	860	6.5%	56
December	744	889	6.5%	58
Total		**10,469**		**681**

Houtzdale Motor Model - Existing Energy Usage

Description	HP		
Feedwater Pump	25	As needed, No VFD	Each operates half the year. Lead lag
Feedwater Pump	25	As needed, No VFD	Each operates half the year. Lead lag
Feedwater Pump	10	Always on	
Pri HW Dist. Pump	7.5		
Pri HW Dist. Pump	7.5		
Pri HW Dist. Pump	7.5		
Sec HW Dist. Pump	7.5		Central Plant to Admin and Building H
Sec HW Dist. Pump	150		Central Plant to building 5
Ter HW Dist Pump	125		Building 5 to remainder.
Coal Boiler FD Fan	20		Coal boiler only operates 3 months per year (8760 x .25). Assume only 1 boiler operates.
Coal Boiler FD Fan	20		
Coal Boiler ID Fan	60		Coal boiler only operates 3 months per year (8760 x .25). Assume only 1 boiler operates.
Coal Boiler ID Fan	20		
CB Boiler Burner	75		Assume runs 5 months (April, September, October, November, December)
KWN Boiler Burner	75		Assumed to run Summer (May, June, July, August)
Condensate Return	5		
Condensate Return	5		
Coal Blower	20		Coal boiler only operates 3 months per year (8760 x .25). Assume only 1 boiler operates.
Coal Blower	20		
Coal Micronizer	150		1 for each coal boiler
Coal Micronizer	150		
Pneumatic Air Comp.	40		

Houtzdale - Existing Motor Energy Use

	HP	Number	Total HP	KW / HP	VFD	Total KW	% Max Load	Baseline Eff.	KW	Hours Operating	kWh	Demand Total (kW)	Annual Total (kWh)	Average Hourly Load (kWh)
Feedwater Pump	25	1	25	0.746		18.65	80%	75%	19.89	4380	87,133			
Feedwater Pump	25	1	25	0.746		18.65	80%	75%	19.89	4380	87,133			
Feedwater Pump	10	1	10	0.746		7.46	80%	75%	7.96	8760	69,706			
Pri HW Dist. Pump	7.5	1	7.5	0.746		5.595	80%	75%	5.97	4380	26,140			
Pri HW Dist. Pump	7.5	1	7.5	0.746		5.595	80%	75%	5.97	4380	26,140			
Pri HW Dist. Pump	7.5	0	0	0.746		0	80%	75%	0.00	0	-			
Sec HW Dist. Pump (3 & 4)	7.5	1	7.5	0.746	yes	5.595	80%	75%	5.97	4380	26,140	294	1,324,419	151
Sec HW Dist. Pump (3 & 4)	7.5	1	7.5	0.746	yes	5.595	80%	75%	5.97	4380	26,140			
Sec HW Dist. Pump (1 & 2)	150	1	150	0.746	yes	111.9	40%	75%	59.68	4380	261,398			
Sec HW Dist. Pump (1 & 2)	150	1	150	0.746	yes	111.9	40%	75%	59.68	4380	261,398			
Ter HW Dist Pump	125	1	125	0.746	yes	93.25	40%	75%	49.73	4380	217,832			
Ter HW Dist Pump	125	1	125	0.746	yes	93.25	40%	75%	49.73	4380	217,832			
Condensate Return	5	1	5	0.746		3.73	80%	75%	3.98	4380	17,427			
Condensate Return	5	0	0	0.746		0	80%	75%	0.00	0	-			
FD Fan	20	1	20	0.746		14.92	80%	75%	15.91	1095	17,427			
FD Fan	20	1	20	0.746		14.92	80%	75%	15.91	1095	17,427			
ID Fan	60	1	60	0.746		44.76	80%	75%	47.74	1095	52,280			
ID Fan	60	1	60	0.746		44.76	80%	75%	47.74	1095	52,280	279	566,363	65
CB Boiler Burner	75	1	75	0.746		55.95	80%	75%	59.68	3650	217,832			
KWN Boiler Burner	75	1	75	0.746		55.95	80%	75%	59.68	2920	174,266			
Coal Blower	20	1	20	0.746		14.92	80%	75%	15.91	1095	17,427			
Coal Blower	20	1	20	0.746		14.92	80%	75%	15.91	1095	17,427			
Coal Micronizer	150	1	150	0.746		111.9	80%	75%	119.36	1095	130,699	239	261,398	30
Coal Micronizer	150	1	150	0.746		111.9	80%	75%	119.36	1095	130,699			
Pneumatic Air Comp.	40	1	40	0.746		29.84	80%	75%	31.83	4380	139,412	32	139,412	16
									843.48		2,291,593		**2,291,593**	
								Demand for 12 months	10,121.73					

Electric Model

Month	Hrs/Month	Days per Month	Pumps kWh	Fans kWh	Micronizer & Comp kWh	
January	744	31	112,485	48,102	34,041	
February	672	28	101,599	43,447	30,747	
March	744	31	112,485	48,102	34,041	
April	720	30	108,856	46,550	32,943	
May	744	31	112,485	48,102	34,041	
June	720	30	108,856	46,550	32,943	
July	744	31	112,485	48,102	34,041	
August	744	31	112,485	48,102	34,041	
September	720	30	108,856	46,550	32,943	
October	744	31	112,485	48,102	34,041	
November	720	30	108,856	46,550	32,943	
December	744	31	112,485	48,102	34,041	
Total			**1,324,419**	**566,363**	**400,811**	**2,291,593**
						$0.075 $/kWh
						$171,869

ECM 3.1&3.2- Convert CB to HW and New Central Steam Plant for Kitchen and Laundry

Savings (kwh)	932,321
Unit Cost ($/kWh)	$0.075
Savings ($)	$69,924

Houtzdale - Proposed Motor Energy Use

	HP	Number	Total HP	KW / HP	VFD	Total KW	% Max Load	Baseline Eff.	KW	Hours Operating	kWh	Demand Total (kW)	Annual Total (kWh)	Average Hourly Load (kWh)
-	-	-	-	-	-	-	-	-	-	-	-			
-	-	-	-	-	-	-	-	-	-	-	-			
-	-	-	-	-	-	-	-	-	-	-	-			
Variable Primary HW Pump 1	60	1	60	0.746	yes	44.76	80%	75%	47.74	8760	418,237			
Variable Primary HW Pump 2	60	1	60	0.746	yes	44.76	80%	75%	47.74	2920	139,412			
Freeze Protection Pump	7.5	1	7.5	0.746	yes	5.595	80%	75%	5.97	2920	17,427			
Pri HW Dist. Pump	0	0	0	0.746		0	80%	75%	0.00	0	-	101	575,076	66
Sec HW Dist. Pump (3 & 4)	0	1	0	0.746	yes	0	80%	75%	0.00	4380	-			
Sec HW Dist. Pump (3 & 4)	0	1	0	0.746	yes	0	80%	75%	0.00	4380	-			
Sec HW Dist. Pump (1 & 2)	0	1	0	0.746	yes	0	40%	75%	0.00	4380	-			
Sec HW Dist. Pump (1 & 2)	0	1	0	0.746	yes	0	40%	75%	0.00	4380	-			
Ter HW Dist Pump	0	1	0	0.746	yes	0	40%	75%	0.00	4380	-			
Ter HW Dist Pump	0	1	0	0.746	yes	0	40%	75%	0.00	4380	-			
Condensate Return	5	1	5	0.746		3.73	80%	75%	3.98	4380	17,427			
Condensate Return	5	0	0	0.746		0	80%	75%	0.00	0	-			
New CB 350 HP Steam Boiler	15	1	15	0.746		11.19	40%	75%	5.97	4380	26,140			
New CB 350 HP Steam Boiler	15	1	15	0.746		11.19	40%	75%	5.97	4380	26,140	40	174,266	19.89
Feedwater Pump	15	1	15	0.746		11.19	80%	75%	11.94	4380	52,280			
Feedwater Pump	15	1	15	0.746		11.19	80%	75%	11.94	4380	52,280			
Feedwater Pump	0	1	0	0.746		0	80%	75%	0.00	8760	-			
FD Fan	20	1	20	0.746		14.92	80%	75%	15.91	1095	17,427			
FD Fan	20	1	20	0.746		14.92	80%	75%	15.91	1095	17,427			
ID Fan	60	1	60	0.746		44.76	80%	75%	47.74	1095	52,280			
ID Fan	60	1	60	0.746		44.76	80%	75%	47.74	1095	52,280			
CB Boiler Burner	75	1	75	0.746		55.95	80%	75%	59.68	0	-			
New CB 350 HP HW Boiler	15	1	15	0.746		11.19	80%	75%	11.94	8760	104,559	302	313,678	36
New CB 350 HP HW Boiler	15	1	15	0.746		11.19	80%	75%	11.94	2920	34,853			
-	-	-	-	-	-	-	-	-	-	-	-			
-	-	-	-	-	-	-	-	-	-	-	-			
Coal Blower	20	1	20	0.746		14.92	80%	75%	15.91	1095	17,427			
Coal Blower	20	1	20	0.746		14.92	80%	75%	15.91	1095	17,427			
Coal Micronizer	150	1	150	0.746		111.9	80%	75%	119.36	1095	130,699	239	261,398	30
Coal Micronizer	150	1	150	0.746		111.9	80%	75%	119.36	1095	130,699			
Pneumatic Air Comp.	10	1	10	0.746		7.46	80%	75%	7.96	4380	34,853	8	34,853	4
									690		1,359,272		**1,359,272**	
								Demand for 12 months	8,284					

Electric Model

Month	Hrs/Month	Days per Month	Pumps kWh	Fans kWh	Micronizer & Comp kWh	
January	744	31	59,203	31,081	25,161	
February	672	28	53,473	28,073	22,726	
March	744	31	59,203	31,081	25,161	
April	720	30	57,293	30,079	24,349	
May	744	31	59,203	31,081	25,161	
June	720	30	57,293	30,079	24,349	
July	744	31	59,203	31,081	25,161	
August	744	31	59,203	31,081	25,161	
September	720	30	57,293	30,079	24,349	
October	744	31	59,203	31,081	25,161	
November	720	30	57,293	30,079	24,349	
December	744	31	59,203	31,081	25,161	
Total			**697,062**	**365,958**	**296,252**	**1,359,272**
						$0.075 $/kWh
						$101,945

Assumptions
New CB HW Boiler operates one year round and the second operates 50% in winter months, 25% in shoulder months and does not operate in summer.
Existing CB and KWN steam boilers operate as backup, not used typically.
HW pumps - each operate s 9 months a year, one always operating and both operating 4 months a year
Coal equipment removed under ECM 3a
HW pumps are 60 HP for design, but are expected to operate at 50 HP.

Peak load with diversity - 250/350=71% runs 16hr/24hr= 33%, 71%-33%=Approx 40%

$$BHP = \frac{(System\ GPM + 20\%) * Sys\ Head}{(.75 * 3960)} =$$

System Flow (GPM)	700	
Contingency Factor	20%	Safety margin included in head
System Head (ft)	180	
Pump Eff	75%	
Constant	3960	
BHP	**51**	

SAVINGS CALCULATION

ECM-4.1 Hot Water Distribution Replacement
ECM-4.2 Chilled Water Distribution Replacement

SCI Houtzdale	**ECM- 4** (4.1 & 4.2)
Install New HW & CHW on Stanchions	

Description	Estimated Annual Consumption		Estimated Annual Cost
Existing Piping - Fuel	76,567	mmBtu	$ 691,784
Existing Boilers - Electricity	-	kWh	$ -
Proposed Boilers - Fuel	74,074	mmBtu	$ 669,263
Proposed Boilers - Electricity	-	kWh	$ -

Description	Estimated Annual Energy Savings		Estimated Annual Savings
Proposed Savings - Fuel	2,493	mmBtu	$ 22,522
Proposed Savings - Electricity	-	kWh	$ -
Total Proposed Savings	**2,493**	**mmBtu**	**$ 22,522**

Assumptions
Existing Fuel Unit Cost is $9.04/mmBtu
Proposed Fuel Unit Cost is $ 9.04/mmBtu
Boiler Effeciency remains the same
Pumping operations remain unchanged
Five foot stanchions

ECM 3b - Convert CB to HW and New Steam Plant In Central Plant for Kitchen and Laundry

Based on 2018 Fuel Consumption

Gas Cost ($/mmBtu) $ 9.04

Date			Boiler Input (mmbtu)	HW Boiler Input (mmBtu)	Steam Boiler Input (mmBtu)	Steam Boiler Ouput (mmBtu)	DA Usage (mmBtu)	UG Pipe Losses (3) (mmBtu)	Kitchen & Laundry Steam (mmBtu)	Plant HW HX (mmBtu)	HW HX Losses (mmBtu)	CB HW Boiler Output (mmBtu)	HW for CHW Freeze Protect (mmBtu)	UG Pipe Losses (HW) (mmbtu)	Delivered to Bldg (mmbtu)	DHW (mmBtu)	Bldg HW HX Losses (mmBtu)	Space Heating Load (mmBtu)
January	$	94,545	10,464	8,913	1,551	1,272	72	32	1,168			7,309	37	261	**7,011**	889	58	6,064
February	$	75,744	8,383	6,926	1,458	1,195	68	28	1,099			5,679	33	253	**5,392**	803	52	4,537
March	$	79,669	8,818	7,179	1,639	1,344	76	32	1,236			5,887	37	261	**5,588**	889	58	4,641
April	$	64,279	7,114	5,432	1,682	1,379	78	31	1,271			4,455	-	259	**4,196**	860	56	3,280
May	$	43,809	4,849	2,955	1,894	1,553	88	30	1,435			2,423	-	250	**2,173**	889	58	1,226
June	$	40,065	4,434	2,566	1,869	1,532	87	29	1,416			2,104	-	248	**1,856**	860	56	940
July	$	40,798	4,516	2,575	1,940	1,591	90	30	1,471			2,112	-	250	**1,862**	889	58	915
August	$	38,583	4,270	2,363	1,908	1,564	89	30	1,445			1,937	-	250	**1,687**	889	58	740
September	$	38,601	4,272	2,400	1,872	1,535	87	29	1,419			1,968	-	248	**1,720**	860	56	804
October	$	46,739	5,173	3,301	1,872	1,535	87	30	1,418			2,707	-	250	**2,457**	889	58	1,510
November	$	62,519	6,920	5,243	1,677	1,375	78	31	1,267			4,299	-	259	**4,041**	860	56	3,124
December	$	66,433	7,353	5,624	1,729	1,418	80	32	1,306			4,611	37	261	**4,313**	889	58	3,366
Totals	**$**	**691,784**	**76,567**	**55,476**	**21,091**	**17,295**	**979**	**365**	**15,951**			**45,490**	**145**	**3049**	**42,296**	**10,469**	**681**	**31,146**
																-		

HW Boiler Combustion Eff.		82%
Steam Boiler Comb Eff.		82%
System Eff.	75%	
Fuel Savings	**$ 125,706**	

Assumptions

1) Convert central plant CB boiler to HW
2) Operate new steam boiler(s) in central plant for Kitchen and Laundry
3) Operate new HW boilers in central plant, no reduction in loop temperature (180°F).
4) Assumes coal equipment electric savings were captured with the CNG ECM model.
5) Assumes installation of two new 350HP HW boilers in central plant.

ECM 4 - Hot Water Pipe Replacement

Based on 2018 Fuel Consumption

Gas Cost ($/mmBtu)	$ 9.04	$ 9.04

Date			Boiler Input (mmbtu)	HW Boiler Input (mmBtu)	Steam Boiler Input (mmBtu)	Steam Boiler Ouput (mmBtu)	DA Usage (mmBtu)	UG Pipe Losses (mmBtu)	Kitchen & Laundry Steam (mmBtu)	Plant HW HX (mmBtu)	HW HX Losses (mmBtu)	CB HW Boiler Output (mmBtu)	HW for CHW Heat Trace (mmBtu)	AG Pipe Losses (HW) (mmbtu)	Delivered to Bldg (mmbtu)	DHW (mmBtu)	Bldg HW HX Losses (mmBtu)	Space Heating Load (mmBtu)
January	$	92,809	10,272	8,741	1,531	1,256	72	15	1,168			7,168	37	120	**7,011**	889	58	6,064
February	$	73,984	8,189	6,749	1,440	1,181	68	14	1,099			5,534	33	108	**5,392**	803	52	4,537
March	$	77,933	8,626	7,006	1,619	1,328	76	15	1,236			5,745	37	120	**5,588**	889	58	4,641
April	$	62,535	6,921	5,259	1,663	1,364	78	15	1,271			4,312	-	116	**4,196**	860	56	3,280
May	$	41,798	4,626	2,751	1,876	1,538	88	15	1,435			2,256	-	83	**2,173**	889	58	1,226
June	$	38,055	4,212	2,361	1,851	1,518	87	15	1,416			1,936	-	80	**1,856**	860	56	940
July	$	38,787	4,293	2,371	1,922	1,576	90	15	1,471			1,944	-	83	**1,862**	889	58	915
August	$	36,572	4,048	2,158	1,889	1,549	89	15	1,445			1,770	-	83	**1,687**	889	58	740
September	$	36,590	4,050	2,195	1,854	1,521	87	15	1,419			1,800	-	80	**1,720**	860	56	804
October	$	44,727	4,950	3,097	1,854	1,520	87	15	1,418			2,539	-	83	**2,457**	889	58	1,510
November	$	60,775	6,727	5,069	1,658	1,359	78	15	1,267			4,157	-	116	**4,041**	860	56	3,124
December	$	64,698	7,161	5,451	1,710	1,402	80	15	1,306			4,470	37	120	**4,313**	889	58	3,366
Totals	**$**	**669,263**	**74,074**	**53,207**	**20,867**	**17,111**	**979**	**181**	**15,951**			**43,630**	**145**	**1189**	**42,296**	**10,469**	**681**	**31,146**
Percent of Total																-		

Mass Distrubution losses removed in equation

HW Boiler Combustion Eff.	82%
Steam Boiler Comb Eff.	82%

Cost Prior to HW Pipe Replacement	$691,784	Model 3b total
Energy Prior to HW Pipe Replacement	76,567	Model 3e total
Cost Savings	$22,522	We also need to account for water savings.
Energy Savings	2,493	
System Eff.	78%	

Pipe Losses - Thermal HW Dist. Losses

AG Mineral Wool

	k value	Thickness (Inches)	R Value
HW	0.28	3	10.71
Air Film			0.61
			11.32

Aboveground Piping

	Summer	Winter
Ave. HW Temperature (°F)	170	180
Ambient Temperature (°F)	70	35

Tunnel Pipe Sizes

Diameter (inch)	Line Length (ft)	Winter Losses (Btu/hr)	Summer Losses (Btu/hr)
16		0	0
14		0	0
12		0	0
10		0	0
8	0	0	0
6	8,000	160,904	110,968
3		0	0
	TOTAL	**160,904**	**110,968**

Q=DπL(T1-T2)/(Insulation Thickness)/k

AG Pipe Loss Annual Profile

Month	Hrs/Month	Losses mmBtu
January	744	119.7
February	672	108.1
March	744	119.7
April	720	115.9
May	744	82.6
June	720	79.9
July	744	82.6
August	744	82.6
September	720	79.9
October	744	82.6
November	720	115.9
December	744	119.7
Total		**1,189.0**

Pipe Losses - Thermal Steam Dist. Losses

AG Mineral Wool

	k value	Thickness (Inches)	R Value
Steam	0.37	5	13.51
Air Film			0.61
			14.12

Tunnel

	Summer	Winter
120 psi Steam Temperature (°F)	340	340
Ambient Temperature (°F)	70	35

Tunnel Pipe Sizes

Diameter (inch)	Line Length (ft)	Winter Losses (#/hr)	Summer Losses (#/hr)
16		0	0
14		0	0
12		0	0
10		0	0
8		0	0
6	610	21	18
3		0	0
	TOTAL	**21**	**18**

Q=DπL(T1-T2)/(Insulation Thickness)/k

	Winter Losses (#/hr)	**Summer Losses (#/hr)**	**Total Losses (#/hr)**

UG Steam Pipe Loss Annual Profile

Month	Hrs/Month	Losses mmBtu
January	744	15.39
February	672	13.91
March	744	15.39
April	720	14.90
May	744	15.39
June	720	14.90
July	744	15.39
August	744	15.39
September	720	14.90
October	744	15.39
November	720	14.90
December	744	15.39
Total		**181.26**

Hot Water

Date	Leak (Gallons)	GPM	Leaks (lbs)	Btu/hr	
Jan-17					
Feb-17					
Mar-17					
Apr-17					
May-17					
Jun-17					
Jul-17	1,841	0.04	15,354	2,522	
Aug-17	2,186	0.05	18,231	2,995	
Sep-17	22	0.00	183	30	
Oct-17	228	0.01	1,902	312	
Nov-17	398	0.01	3,319	545	
Dec-17	226	0.01	1,885	310	
Jan-18	358	0.01	2,986	490	
Feb-18	1,450	0.03	12,093	1,986	
Mar-18	134,005	3.06	1,117,602	183,568	
Apr-18	166,704	3.81	1,390,311	228,362	
May-18	181,067	4.13	1,510,099	248,037	247,548
Jun-18	191,438	4.37	1,596,593	262,244	
Jul-18	230,338	5.26	1,921,019	315,532	

Chilled Water

Date	Leak (Gallons)	GPM	Leaks (lbs)	Btu/hr
Jan-17				
Feb-17				
Mar-17				
Apr-17				
May-17				
Jun-17				
Jul-17	18,500	0.42	154,290	3,801
Aug-17	56,600	1.29	472,044	11,630
Sep-17	68,400	1.56	570,456	14,055
Oct-17	59,800	1.37	498,732	12,288
Nov-17	-	-	-	-
Dec-17	-	-	-	-
Jan-18	-	-	-	-
Feb-18	-	-	-	-
Mar-18	-	-	-	-
Apr-18	-	-	-	-
May-18	79,200	1.81	660,528	16,274
Jun-18	84,800	1.94	707,232	17,425
Jul-18	95,800	2.19	798,972	19,685

SAVINGS CALCULATION

ECM-5 Water Conservation

Water ECM Project Summary Sheet

Base SOW

November 17, 2019

	Company	**Facility Name and Location**
Project Name:	TEN	SCI Houtzdale, PA, USA

Inmate Population:

Total	2468
Cell Population	2000
Dorm Population	468

Staff Population:

Total	450
Security Staff	375
Admin Staff	75

Ground Water Temp F	50
Affected Water Rate per kGal over Minimum	$7.0506
Affected Blended Water Rate per kGal	$6.2020
Affected Sewer Rate per kGal	$0.0000
Affected Combined Rate per kGal	$6.2020
Fuel Rate per 1 MMBTU (10 therms)	$8.00
Electrical Rate (Electric DHW, $/kWh)	$0.00000
Electric Water Heating (Yes/No)	No

Total Water Consumption Gal/Yr	117,957,333	"SCI Base Year Volume Avg. 2016-2018"
Minimum Use(@ 225k Gal/day) Gal/Yr	82,125,000	"Post Retrofit Target Volume"
Available Water to Relize Savings Gal/Yr	35,832,333	"Max Potential Savings Volume"
Affected Water Consumption Gal/Yr	67,975,316	
Percentage of Water Affected	57.6%	
Percentage of Water Savings	34.5%	
Total Water Savings Gal/Yr	40,735,157	
Total Water Savings	$ 252,639	
Total Fuel Savings	$ 45,293	
Total Savings	$ 297,932	
Payback	7.43	

Facility Totals:

I-CON Combi Retrofits (Toilet and Lav), New SS	0
I-CON Toilet Retrofits, New SS	0
I-CON Lavatory Retrofits, New SS	0
I-CON Combi Retrofits (Toilet and Lav)	352
I-CON Toilet Retrofits	768
I-CON Shower Retrofits	266
I-CON Lav Retrofits	0
I-CON Urinal Retrofits	0
I-CON Mop Sink Retrofits	0
I-CON Garden Hose Retrofits	0
LF Toilet and Flush Valve, or Diaphragms	105
LF Showerheads	4
LF Faucet or Kitchen Aerators	138
Commercial 1.0 GPF Urinal Diaphragm Kit	30
Envisage Computers	0

Inmate (Cell) Totals:

I-CON Toilet Retrofits	1098
I-CON Shower Retrofits	232
I-CON Lav Retrofits	352
I-CON Urinal Retrofits	0
LF Faucet Aerators	27
I-CON Envisage Computers	0

Inmate Dorm Totals:

I-CON Toilet Retrofits	22
I-CON Shower Retrofits	34
I-CON Lavatory Retrofits	0
I-CON Mop Sink Retrofits	0
I-CON Garden Hose Retrofits	0
LF Toilet and Flush Valve, or Diaphragms	42
LF Faucet or Kitchen Aerators	47
Commercial 1.0 GPF Urinal Diaphragm Kit	24
LF Showerheads	4
I-CON Envisage Computers	0

Staff Totals:

LF Toilet and Flush Valve or Diaphragms	63
LF Showerhead	0
LF Faucet Aerators	54
LF Kitchen Aerators	10
Commercial 1.0 GPF Urinal Diaphragm Kit	6
LF Tank Toilets	0

Proprietary and Confidential
Intelligent Conservation Systems, Inc.

Water Conservation Analysis - Inmate
TEN/SCI Houtzdale, PA, USA

November 17, 2019

Facility:	**SCI Houtzdale, PA, USA / Inmate**
#inmate	2000
Annual Occupancy	100%
# of Days / Year	365
Occupied Days/Year	365
Water Cost /1000 Gallons	$6.2020
Fuel / 1M Units	$8.00
Water Temp in Water Heater	50
Water Temp out of Water Heater	140
Mixed Water from Temp.Valve	105
Shower Retrofit Hot Water Percentage	100%
Hot Water Heating and Distribution Efficiency	85%

# Of Devices To Be Installed	
I-CON Flush Valve Retrofit	1098
I-CON Shower Valve Retrofit	232
I-CON Lavatory Valve Retrofit	352
LF Faucet Aerators	27
Urinals	0
Flushometer W.C. Open Area	0
Envisage System	0

Inmate Usage Per Day	
Flush Valve Flushes Per Fixture Before (Cells)	30
Flush Valve Flushes Per Fixture After (Cells)	17
Shower Minutes Per User Before	8
Lavatory Valve Minutes Per User Before	4
Lavatory Valve Minutes Per User After	3
Minutes Per Aerator	4
Urinal Flushes Per Day	0
Flushometer W.C. Flushes Per Fixture/Day	0
Shower Minutes Per User After	7

Device	Gallon Flow Before	Gallon Flow After	Per Day	Gallons Saved	Tenants Inmate	Occupied Days Per Year	# of Devices	Gallons Saved Per Year	Water Cost Per 1000 Gins	Savings Per Devise
I-CON Flush Valve Retrofit	3.40	1.90	30	1.50	2000	365	1098	27,933,669	$6.2020	$173,245
I-CON Shower Valve Retrofit	3.00	1.80	8	1.20	2000	365	232	8,322,000	$6.2020	$51,613
I-CON Lav (Faucet) Valve Retrofit	0.60	0.60	4	0.00	600	365	352	131,407	$6.2020	$815
LF Faucet Aerators	2.20	1.00	4	1.20	2000	365	27	47,304	$6.2020	$293
Urinal Valve	0.00	0.00	0	0.00	2000	365	0	-	$6.2020	$0
Flushometer W.C.	0.00	0.00	0	0.00	2000	365	0	-	$6.2020	$0
Envisage							0			
								36,434,380		**$225,966**

Proprietary and Confidential
Intelligent Conservation Systems, Inc.

Intelligent Conservation Systems, Inc.

Water Conservation Analysis - Inmate
TEN/SCI Houtzdale, PA, USA

November 17, 2019

FACILITY INFORMATION:

Number of Inmates		2000
Water rate/1,000 Gallons	$	6.2020
Cold Water Temp into Heater		50
Hot Water Temp out of Heater		140
Mixed Water from Tempering Valve		105
Shower Retrofit Hot Water Percentage		100%
Fuel/1M BTU		$8.00

AVERAGE USAGE PER DAY:

Flush Valve Flushes Per Fixture Before (Cells)	30	flushes/per unit
Flush Valve Flushes Per Fixture After (Cells)	17	flushes/per unit
Shower Minutes Per User Before	8	minutes/per user
Lavatory Valve Minutes Per User Before	4	minutes/per user
Aerators	4	minutes/per unit
Urinals	0	flushes/per unit
Flush Valves	0	flushes/per unit
Showerheads After	7	minutes/per user

GALLONS USED PER DEVICE:

DEVICES	BEFORE RETROFIT	AFTER RETROFIT
Flush Valves Per Flush	3.40	1.90
Showerheads Per Minute	3.00	1.80
Lavatory Aerators Per Minute	0.60	0.60
Aerators Per Minute	2.20	1.00
Urinals Per Flush	0.00	0.00
Flush Valves Per Flush	0.00	0.00

NUMBER OF DEVICES TO BE INSTALLED:

I-CON Flush Valve Retrofit	1098
I-CON Shower Valve Retrofit	232
I-CON Lavatory Valve Retrofit	352
Aerators	27
Urinals	0
Flush Valves	0

TOTAL GALLONS USED PER DEVICE:

DEVICES	BEFORE RETROFIT		AFTER RETROFIT		SAVINGS
Flush Valves Per Flush	(30)X(3.4)X(1098)X(365) =	40,878,540	(17)X(1.9)X(1098)X(365) =	12,944,871	27,933,669
Showerheads Per Minute	(8)X(3)X(2000)X(365) =	17,520,000	(7)X(1.8)X(2000)X(365) =	9,198,000	8,322,000
Lavatory Aerators Per Minute	(4)X(0.6)X(600)X(365) =	525,600	(3)X(0.59999)X(600)X(365) =	394,193	131,407
Aerators Per Minute	(4)X(2.2)X(27)X(365) =	86,724	(4)X(1)X(27)X(365) =	39,420	47,304
Urinals Per Flush	(0)X(0)X(0)X(365) =	-	(0)X(0)X(0)X(365) =	-	-
Flush Valves Per Flush	(0)X(0)X(0)X(365) =	-	(0)X(0)X(0)X(365) =	-	-
TOTAL USAGE		59,010,864		22,576,484	36,434,380

TOTAL MMBTUS USED PER DEVICE:

	MMBTUS BEFORE RETROFIT		MMBTUS AFTER RETROFIT		SAVINGS
Fuel for Hot Water Showers	(105-50)X(3)X(1)X(8)X(2000)X(8.34)X(365)/1M/(0.85) =	9,455	(105-50)X(1.8)X(1)X(7)X(2000)X(8.34)X(365)/1M/(0.85) =	4,964	4,491
Fuel for Hot Water Lavatories	(105-50)X(0.6/2)X(4)X(600)X(8.34)X(365)/1M/(0.85) =	142	(105-50)X(0.59999/2)X(3)X(600)X(8.34)X(365)/1M/(0.85) =	106	35
Fuel for Hot Water Aerators	(105-50)X(2.2/2)X(4)X(27)X(8.34)X(365)/1M/(0.85) =	23	(105-50)X(1/2)X(4)X(27)X(8.34)X(365)/1M(0.85) =	11	13
TOTAL SAVED		9,620		5,081	4,539

SUMMARY:

Total Gallons of Water Saved After Installation			36,434,380
Total 1,000 Gallon Water Units			36,434
Water Savings Per Year	36,434 X $6.2020/1000 Gallons =	$	225,966
Fuel Savings Per Year	4,539 MMBTUS X $8.00/MMBTUS =	$	36,313
TOTAL SAVINGS PER YEAR		$	262,279

Proprietary and Confidential
Intelligent Conservation Systems, Inc.

Water Conservation Analysis - Inmate Dorm
TEN/SCI Houtzdale, PA, USA

November 17, 2019

Facility:	**SCI Houtzdale, PA, USA / Inmate Dorm**
# of Dorms	0
#inmate	468
Annual Occupancy	100%
# of Days / Year	365
Occupied Days/Year	365
Water Cost /1000 Gallons	$6.2020
Fuel / 1M Units	$8.00
Water Temp in Water Heater	50
Water Temp out of Water Heater	140
Mixed Water from Temp.Valve	105
Shower Retrofit Hot Water Percentage	100%
LF Showerhead Hot Water Percentage	100%
Hot Water Heating and Distribution Efficiency	85%

# Of Devices To Be Installed	
I-CON Flush Valve Retrofit	22
I-CON Shower Valve Retrofit	34
I-CON Lav (Faucet) Valve Retrofit	0
I-CON Mop Sink Retrofits	0
I-CON Garden Hose Retrofits	0
LF Toilet and Flush Valve, or Diaphragms	42
LF Faucet or Kitchen Aerators	47
Commercial 1.0 GPF Urinal Diaphragm Kit	24
LF Showerheads	4
I-CON Envisage Computers	0

Inmate Usage Per Day	
Flush Valve Flushes Per Fixture Before	50
Flush Valve Flushes Per Fixture After	45
Shower Minutes Per User Before	8
Shower Minutes Per User After	7
Lavatory Minutes Per User	4
Mop Sink Minutes Per Fixture Before	0
Mop Sink Minutes Per Fixture After	0
Garden Hose Minutes Per Fixture Before	0
Garden Hose Minutes Per Fixture After	0
LF Toilet Flushes Per Fixture	35
LF Aerator Minutes Per Fixture	3
LF Urinal Flushes Per Fixture	20
LF Showerhead Minutes Per User	10

Device	Gallon Flow Before	Gallon Flow After	Usage Per Day (Pre)	Gallons Saved	Tenants Inmate	Occupied Days Per Year	# of Devices	Gallons Saved Per Year	Water Cost Per 1000 Gins	Savings Per Devise
I-CON Flush Valve Retrofit	3.40	1.90	50	1.50	468	365	22	678,535	$6.2020	$4,208
I-CON Shower Valve Retrofit	3.00	1.80	8	1.20	458	365	34	1,905,738	$6.2020	$11,819
I-CON Lav (Faucet) Valve Retrofit	0.50	0.50	4	0.00	468	365	0	-	$6.2020	$0
I-CON Mop Sink Retrofits	6.00	6.00	0	0.00	468	365	0	-	$6.2020	$0
I-CON Garden Hose Retrofits	8.00	8.00	0	0.00	468	365	0	-	$6.2020	$0
LF Toilet and Flush Valve, or Diaphragms	3.40	1.60	35	1.80	468	365	42	965,790	$6.2020	$5,990
LF Faucet or Kitchen Aerators	3.00	1.25	3	1.75	468	365	47	90,064	$6.2020	$559
Commercial 1.0 GPF Urinal Diaphragm Kit	1.00	1.00	20	0.00	468	365	24	0	$6.2020	$0
LF Showerheads	2.50	1.80	10	0.70	10	365	4	25,550	$6.2020	$158
I-CON Envisage Computers							0			
								3,665,677		**$22,735**

Proprietary and Confidential
Intelligent Conservation Systems, Inc.

Intelligent Conservation Systems, Inc.

Water Conservation Analysis - Inmate Dorm
TEN/SCI Houtzdale, PA, USA

November 17, 2019

FACILITY INFORMATION:

Number of Dorms	0
Number of Inmates	468
Water rate/1,000 Gallons	$6.2020
Cold Water Temp into Heater	50
Hot Water Temp out of Heater	140
Mixed Water from Tempering Valve	105
Shower Retrofit Hot Water Percentage	100%
LF Showerhead Hot Water Percentage	100%
Fuel/1M BTU	$8.00

AVERAGE USAGE PER DAY:

Flush Valve Flushes Per Fixture Before	50	flushes/per fixture
Flush Valve Flushes Per Fixture After	45	flushes/per fixture
Shower Minutes Per User Before	8	minutes/per user
Shower Minutes Per User After	7	minutes/per user
Lavatory Minutes Per User	4	minutes/per user
Mop Sink Minutes Per Fixture Before	0	minutes/per fixture
Mop Sink Minutes Per Fixture After	0	minutes/per fixture
Garden Hose Minutes Per Fixture Before	0	minutes/per fixture
Garden Hose Minutes Per Fixture After	0	minutes/per fixture
LF Toilet Flushes Per Fixture	35	flushes/per fixture
LF Aerator Minutes Per Fixture	3	minutes/per fixture
LF Urinal Flushes Per Fixture	20	flushes/per fixture
LF Showerhead Minutes Per User	10	minutes/per user

GALLONS USED PER DEVICE:

DEVICES	BEFORE RETROFIT	AFTER RETROFIT
Flush Valves Per Flush	3.40	1.90
Shower Per Minute	3.00	1.80
Lavatory Aerators Per Minute	0.50	0.50
Mop Sinks Per Minute	6.00	6.00
Garden Hoses Per Minute	8.00	8.00
LF Flush Valves Per Flush	3.40	1.60
LF Faucet Aerators Per Minute	3.00	1.25
LF Urinals Per Flush	1.00	1.00
LF Showerheads Per Minute	2.50	1.80

NUMBER OF DEVICES TO BE INSTALLED:

I-CON Flush Valve Retrofit	22
I-CON Shower Valve Retrofit	34
I-CON Lav (Faucet) Valve Retrofit	0
I-CON Mop Sink Retrofits	0
I-CON Garden Hose Retrofits	0
LF Toilet and Flush Valve, or Diaphr	42
LF Faucet or Kitchen Aerators	47
Commercial 1.0 GPF Urinal Diaphra	24
LF Showerheads	4
I-CON Envisage Computers	0

TOTAL GALLONS USED PER DEVICE:

DEVICES	BEFORE RETROFIT		AFTER RETROFIT		SAVINGS
I-CON Flush Valve Retrofit	(50)X(3.4)X(22)X(365) =	1,365,100	(45)X(1.9)X(22)X(365) =	686,565	678,535
I-CON Shower Valve Retrofit	(8)X(3)X(458)X(365) =	4,012,080	(7)X(1.8)X(458)X(365) =	2,106,342	1,905,738
I-CON Lav (Faucet) Valve Retrofit	(4)X(0.5)X(468)X(365) =	-	(4)X(0.5)X(468)X(365) =	-	-
I-CON Mop Sink Retrofits	(0)X(6)X(0)X(365) =	-	(0)X(6)X(0)X(365) =	-	-
I-CON Garden Hose Retrofits	(0)X(8)X(0)X(365) =	-	(0)X(8)X(0)X(365) =	-	-
LF Toilet and Flush Valve, or Diaphragms	(35)X(3.4)X(42)X(365) =	1,824,270	(35)X(1.6)X(42)X(365) =	858,480	965,790
LF Faucet or Kitchen Aerators	(3)X(3)X(47)X(365) =	154,395	(3)X(1.25)X(47)X(365) =	64,331	90,064
Commercial 1.0 GPF Urinal Diaphragm Kit	(20)X(1)X(24)X(365) =	175,200	(20)X(0.999999)X(24)X(365) =	175,200	0
LF Showerheads	(10)X(2.5)X(10)X(365) =	91,250	(10)X(1.8)X(10)X(365) =	65,700	25,550
TOTAL USAGE		7,622,295		3,956,618	3,665,677

TOTAL MMBTUS USED PER DEVICE:

	MMBTUS BEFORE RETROFIT		MMBTUS AFTER RETROFIT		SAVINGS
Fuel for Hot Water I-CON Shower Valve Retrofit	(105-50)X(3)X(1)X(8)X(458)X(8.34)X(365)/1M/(0.85) =	2,165	(105-50)X(1.8)X(1)X(7)X(458)X(8.34)X(365)/1M/(0.85) =	1,137	1,028
Fuel for Hot Water I-CON Lav (Faucet) Valve Retrofit	(105-50)X(0.5/2)X(4)X(468)X(8.34)X(365)/1M/(0.85) =	-	(105-50)X(0.5/2)X(4)X(468)X(8.34)X(365)/1M/(0.85) =	-	-
Fuel for Hot Water I-CON Mop Sink Retrofits	(105-50)X(6/2)X(0)X(0)X(8.34)X(365)/1M/(0.85) =	-	(105-50)X(6/2)X(0)X(0)X(8.34)X(365)/1M/(0.85) =	-	-
Fuel for Hot Water LF Faucet or Kitchen Aerators	(105-50)X(3/2)X(3)X(47)X(8.34)X(365)/1M/(0.85) =	42	(105-50)X(1.25/2)X(3)X(47)X(8.34)X(365)/1M/(0.85) =	17	24
Fuel for Hot Water LF Showerheads	(105-50)X(2.5)X(1)X(10)X(10)X(8.34)X(365)/1M/(0.85) =	49	(105-50)X(1.8)X(1)X(10)X(10)X(8.34)X(365)/1M/(0.85) =	35	14
TOTAL SAVED		2,256		1,189	1,067

SUMMARY:

Total Gallons of Water Saved After Installation			3,665,677
Total 1,000 Gallon Water Units			3,666
Water Savings Per Year	3,666 X $6.2020/1000 Gallons =	$	22,735
Fuel Savings Per Year	1,067 MMBTUS X $8.00/MMBTUS =	$	8,532
TOTAL SAVINGS PER YEAR		$	31,267

Proprietary and Confidential
Intelligent Conservation Systems, Inc.

Water Conservation Analysis - Staff
TEN/SCI Houtzdale, PA, USA

November 17, 2019

Facility:	**SCI Houtzdale, PA, USA / Staff**
# of Staff Areas	0
#Staff	450
Annual Occupancy	71%
# of Days / Year	365
Occupied Days/Year	260.7142857
Water Cost /1000 Gallons	$6.2020
Fuel / 1M Units	$8.00
Water Temp in Water Heater	50
Water Temp out of Water Heater	140
Mixed Water from Temp.Valve	105
Hot Water Heating and Distribution Efficiency	85%

# Of Devices To Be Installed	
LF Toilet and Flush Valve or Diaphragms	63
LF Showerhead	0
LF Faucet Aerators	54
LF Kitchen Aerators	10
Commercial 1.0 GPF Urinal Diaphragm Kit	6
LF Tank Toilets	0

Staff Usage Per Day	
LF Toilet Flushes Per Fixture	15
LF Showerhead Minutes Per User	0
LF Aerator Minutes Per User	2
Kitchen Aerator Minutes Per Fixture	12
LF Urinal Flushes Per Fixture	20
LF Toilet (Tank) Flushes Per Fixture	0

Device	Gallon Flow Before	Gallon Flow After	Per Day	Gallons Saved	Tenants Staff	Occupied Days Per Year	# of Devices	Gallons Saved Per Year	Water Cost Per 1000 Glns	Savings Per Devise
LF Toilet and Flush Valve or Diaphragms	3.40	1.60	15	1.80	450	260.7142857	63	443,475	$6.2020	$2,750
LF Showerhead	3.00	3.00	0	0.00	450	260.7142857	0	-	$6.2020	$0
LF Faucet Aerators	1.75	1.00	2	0.75	450	260.7142857	54	175,982	$6.2020	$1,091
LF Kitchen Aerators	2.00	1.50	12	0.50	450	260.7142857	10	15,643	$6.2020	$97
Commercial 1.0 GPF Urinal Diaphragm Kit	1.00	1.00	20	0.00	450	260.7142857	6	0	$6.2020	$0
LF Tank Toilets	3.50	3.50	0	0.00	450	260.7142857	0	-	$6.2020	$0
								635,100		**$3,939**

Proprietary and Confidential
Intelligent Conservation Systems, Inc.

Intelligent Conservation Systems, Inc.

Water Conservation Analysis - Staff
TEN/SCI Houtzdale, PA, USA

November 17, 2019

FACILITY INFORMATION:

Number of Staff Areas	0
Number of Staff	450
Water Rate/1,000 Gallons	$6.2020
Cold Water Temp Into Heater	50
Hot Water Temp Out of Heater	140
Mixed Water from Tempering Valve	105
Fuel/1M BTU	$8.00

AVERAGE USAGE PER DAY:

LF Toilet and Flush Valve o	15	flushes/per unit
LF Showerhead	0	minutes/per staff
LF Faucet Aerators	2	minutes/per staff
LF Kitchen Aerators	12	minutes/per unit
Commercial 1.0 GPF Urinal	20	minutes/per unit
LF Tank Toilets	0	flushes/per unit

GALLONS USED PER DEVICE:

DEVICES	BEFORE RETROFIT	AFTER RETROFIT
Flush Valves per Flush	3.40	1.60
Showerheads Per Minute	3.00	3.00
Lavatory Aerators Per Minute	1.75	1.00
Kitchen Aerators Per Minute	2.00	1.50
Urinals Per Flush	1.00	1.00
Flush Valves (Tank) Per Flush	3.50	3.50

NUMBER OF DEVICES TO BE INSTALLED:

LF Toilet and Flush Valve o	63
LF Showerhead	0
LF Faucet Aerators	54
LF Kitchen Aerators	10
Commercial 1.0 GPF Urinal	6
LF Tank Toilets	0

TOTAL GALLONS USED PER DEVICE:

DEVICES	BEFORE RETROFIT		AFTER RETROFIT		SAVINGS
Flush Valves Per Flush	(15)X(3.4)X(63)X(260.714285714286) =	837,675	(63)X(260.714285714286) =	394,200	443,475
Showerheads Per Minutes	(0)X(3)X(450)X(260.714285714286) =	-	450)X(260.714285714286) =	-	-
Lavatory Aerators Per Minute	(2)X(1.75)X(450)X(260.714285714286) =	410,625	450)X(260.714285714286) =	234,643	175,982
Kitchen Aerators Per Minute	(12)X(2)X(10)X(260.714285714286) =	62,571	(10)X(260.714285714286) =	46,929	15,643
Urinals Per Flush	(20)X(1)X(6)X(260.714285714286) =	31,286	X(6)X(260.714285714286) =	31,285	0
Flush Valves (Tank) Per Flush	(0)X(3.5)X(0)X(260.714285714286) =	-	X(0)X(260.714285714286) =	-	-
TOTAL USAGE		1,342,157		707,057	635,100

TOTAL MMBTUS USED PER DEVICE:

		MMBTUS BEFORE RETROFIT		MMBTUS AFTER RETROFIT	SAVINGS
Fuel for Hot Water LF Showerhead	(105-50)X(3/2)X(0)X(450)X(8.34)X(260.714285714286)/1M/(0.85) =	-	(3/2)X()X(450)X(8.34)X(260.714285714286)/1M/(0.85) =	-	-
Fuel for Hot Water LF Faucet Aerators	(105-50)X(1.75/2)X(2)X(450)X(8.34)X(260.714285714286)/1M/(0.85) =	111	(1/2)X()X(450)X(8.34)X(260.714285714286)/1M/(0.85) =	63	47
Fuel for Hot Water LF Kitchen Aerators	(105-50)X(2)X(12)X(10)X(8.34)X(260.714285714286)/1M/(0.85) =	34	1.5)X(12)X(10)X(8.34)X(260.714285714286)/1M/(0.85) =	25	8
TOTAL SAVED		145		89	56

SUMMARY:

Total Gallons of Water Saved After Installation			635,100
Total 1,000 Gallon Water Units			635
Water Savings Per Year	635 X $6.2020/1000 Gallons =	$	3,939
Fuel Savings Per Year	56 MMBTUS X $8.00/MMBTUS =	$	447
TOTAL SAVINGS PER YEAR		$	4,386

Proprietary and Confidential
Intelligent Conservation Systems, Inc.

SAVINGS CALCULATION

ECM-6 Chilled Water Plant Upgrades

ECM 6 &

SCI Houtzdale	ECM- 6a
Central Chilled Water Plant Upgrade & New Cooling Towers	

Description	Estimated Annual Consumption		Estimated Annual Cost
Existing CHW System - Electricity	2,173,716	kWh	$ 163,029
Proposed CHW System - Electricity	1,234,179	kWh	$ 92,563

2,173,716 Existing kWh
1,234,179 Less Proposed KWh
= 939,537 kWh Total Savings

889,537 kWh Savings Applied to ECM 6 - Central Chilled Water Plant Upgrades
50,000 kWh Savings Applied to ECM 6a - Colling Towers Replacement

Assumptions

1) Chillers operate May thru September and part of April and October

2) Peak design cooling load is estimated at 700 tons. Normal summer peak is 600 tons.

3) Two chillers operate at one time, third one is stand-by.

4) 20 HP CT fan, 25 HP pump, 60 HP pump.

SCI Houtzdale - Existing Chilled Water Model

Month	Average Load	Days	Monthly Load	Total Load	Monthly Electricity
	(tons)		(tons-hrs)	(Kw/ton)	(KWh)
January	-	-	-	-	-
Febuary	-	-	-	-	-
March	-	-	-	-	-
April	200	10	48,000	1.27	60,960
May	300	31	223,200	1.25	279,000
June	450	30	324,000	1.24	401,760
July	550	31	409,200	1.23	503,316
August	500	31	372,000	1.24	461,280
September	350	30	252,000	1.25	315,000
October	250	20	120,000	1.27	152,400
November	-	-	-	-	-
December	-	-	-	-	-
Total					**2,173,716**
				Unit Cost	$ 0.075
				Total Cost	**$ 163,029**

Month	Chiller Load	Cooling Towers	Distribution Pumps	Condenser Pumps	Total Load
	(Kw/ton)	(Kw/ton)	(Kw/ton)	(Kw/ton)	(Kw/ton)
January	-	-	-	-	-
Febuary	-	-	-	-	-
March	-	-	-	-	-
April	0.72	0.15	0.30	0.10	1.27
May	0.70	0.15	0.30	0.10	1.25
June	0.69	0.15	0.30	0.10	1.24
July	0.68	0.15	0.30	0.10	1.23
August	0.69	0.15	0.30	0.10	1.24
September	0.70	0.15	0.30	0.10	1.25
October	0.72	0.15	0.30	0.10	1.27
November	-	-	-	-	-
December	-	-	-	-	-

Assumptions
1) Chillers operate May thru September and part of April and October
2) Peak design cooling load is estimated at 700 tons. Normal summer peak is 600 tons.
3) Two chillers operate at one time, one is stand-by.
4) 20 HP CT fan, 25 HP CW pump, 150 HP (total) distribution pumps.

1 ORIGINAL_X_ CHANGE NOT. NO._____

MODEL NUMBER: PEH087JBA54L/E2612-28-2RA/C2212-25YY-2RAYYY/134

G.O. NO.	ITEM NO.	UNIT STYLE	UNITS/G.O. NO.
582157	460	9582157460	3

MKTG.	ENGR.	DRAFT.	PROD. ISCHED
7/21/94 CLR	7/20/94	JVN 9-1-94	

CUSTOMER NAME AND ADDRESS:
MCCARL'S / MCCLURE
PO BOX 191
BEAVER FALLS, PA. 15010

JOB NAME AND ADDRESS:
MCCARL'S/MCCLURE
%HOUTZDALE PRISON
RR1 LEGISLATIVE ROUTE 2007
HOUTZDALE, PA. 16641

	EVAP.	COND.	UNIT
MODEL CODE	E2612-28-2RA	C2212-25YY-2RA	HOT GAS _N_ LIQ INJ _Y_
TUBE:TYP/	I_CU /THK 25	I_CU /THK 28	ICODE ___ SPEC PRESS ___
FPI/ STYLE	I_B2 _/TRB-BIII	I_CT _/TRB-CIII	REF. TYPE 134 LBS.: 975.
HEAD:STYLE	STD	STD	COMPRESSOR__DOWN DISCH__
PASS	2.0	2.0	MODEL CODE:CE087JBA54L0U
CONN	VIC	VIC	COMP STYL NO:058215746F
INSU.	TYP_ST_THK .75	TYP_--_THK N/A	DATA PLATE INFO.
TONS	410.0		VOLTS/HZ = 4160. / 60.
F.F.	.00025	.00025	RLA = 44 (EA)
GPM	656.0	1230.0	KW = 260. (SUM)
IT.ENT/T.EX	60.0_/_ 45.0	85.0_/_ 94.5	LRA-Y = 111. (EA)
SH/SC	SH= 1.0	SC= 8.7	LRA-D = 334. (EA)
SAT.T./P.	42.5 / 37.6	98.3 / 120.6	MOTOR P.N.= 07310015 9
P.DROP FT.	6.4	20.9	B.GEAR P.N.= 776123261
DATA PLATE INFO.,DESIGN PRESS.AND TEMP			P.GEAR P.N.= 070402161
	EVAP.	COND.	IMPELLER = 070523301
SHELL PRES	180.0	225.0	H.T. INSU. = NO
SIDE_TEMP	122.0	250.0	COMPONENTS
TUBE PRES	150.0	150.0	PILOT VAL. = 735048665
SIDE_TEMP	122.0	131.0	I1 EXP.VAL. = 070848009
TUBE P.NO.	070181121	070181164	DISC.CHECK = 735040319
HEAD GSKT	070304605	070304604	CONTROL BOX= 072824414
			H.G.EXP.V. = N/A

PRESS SW SET	WIRING DIAGRAMS		SUB
PT +/-1 PSIG	NOTES&LEG.	070610501_:OK	REL.VALVE =P.N. & QTY
HP= 135.0	SCHEMATIC	070630801_:OP	EVAP =735045811 1/UNIT
LP= 29.0	FIELD CONN	070610701_:OF	COND =735045840 2/UNIT
LPO= 31.0	STARTER	_____:___	
	IMPC SOFTWARE	070832603	

FULL FACTORY CHARGE

260 KW / 410 TONS = 0.634 KW/TON

SCI Houtzdale - Proposed Chilled Water Model

Month	Average Load	Days	Monthly Load	Total Load	Monthly Electricity
	(tons)		(tons-hrs)	(Kw/ton)	(KWh)
January	-	31	-	-	7,440
Febuary	-	28	-	-	6,720
March/April	-	51	-	-	12,240
April	200	10	48,000	0.56	26,870
May	300	31	223,200	0.61	136,799
June	450	30	324,000	0.61	198,580
July	550	31	409,200	0.79	321,427
August	500	31	372,000	0.79	292,206
September	350	30	252,000	0.56	141,070
October	250	20	120,000	0.61	73,548
November/Oct	-	41	-	-	9,840
December	-	31	-	-	7,440
Total					**1,234,179**
				Unit Cost	$ 0.075
				Total Cost	**$ 92,563**

Savings
939,537 kWh
$70,465

Month	Chiller Load	Cooling Towers	Distribution Pumps	Condenser Pumps	Total Load
	(Kw/ton)	(Kw/ton)	(Kw/ton)	(Kw/ton)	(Kw/ton)
January	-	-	-	-	-
Febuary	-	-	-	-	-
March	-	-	-	-	-
April	0.31	0.05	0.15	0.05	0.56
May	0.36	0.05	0.15	0.05	0.61
June	0.36	0.05	0.15	0.05	0.61
July	0.54	0.05	0.15	0.05	0.79
August	0.54	0.05	0.15	0.05	0.79
September	0.31	0.05	0.15	0.05	0.56
October	0.36	0.05	0.15	0.05	0.61
November	-	-	-	-	-
December	-	-	-	-	-

Assumptions
1) Chillers operate May thru September and part of April and October
2) Peak design cooling load is estimated at 700 tons. Normal summer peak is 600 tons.
3) Two chillers operate at one time, one is stand-by.
4) 20 HP CT fan, 25 HP CW pump, 60 HP CHW pump.
5) Distribution pumps are sized for 2 GPM/Ton.

20 HP CT Fan
0.745 kW/HP
100% % Max Load
75% Baseline Eff.
19.87 kW total
395 CT Capacity (tons)
0.050 kw/ton

$$BHP = \frac{(System\ GPM + 20\%) * Sys\ Head}{(.75 * 3960)} =$$

120 HP CHW Dist Pump
0.745 kW/HP
40% % Max Load
75% Baseline Eff.
47.68 kW total
395 CH Capacity (tons)
0.121 kw/ton

System Flow (GPM)	1600	
Factor	0%	Safety margin included in head
System Head (ft)	180	
Pump Eff	75%	
Constant	3960	
BHP	**97**	

25 HP CW pump
0.745 kW/HP
80% % Max Load
75% Baseline Eff.
19.87 kW total
395 CT Capacity (tons)
0.050 kw/ton

Tower Flow (GPM)	1200	
Factor	0%	Safety margin included in head
Head (ft)	54	
Pump Eff	78%	
Constant	3960	
BHP	**21**	

New Chiller Efficiencies

Percent Load	Chiller 42 F with CW reset Net Capacity (ton)	Input (kW)	Cooling Efficiency kW/ton	Percent Load	Chiller 42 F without CW reset Net Capacity (ton)	Input (kW)	Cooling Efficiency kW/ton
10%	39.60	9.590	0.2424	16.5%	65.10	35.90	0.5519
20%	79.10	22.08	0.2791	20%	79.10	43.46	0.5493
30%	118.7	34.98	0.2947	30%	118.7	64.27	0.5415
40%	158.2	47.13	0.2978	40%	158.2	86.13	0.5443
50%	197.8	61.29	0.3098	50%	197.8	109.3	0.5526
60%	237.4	86.14	0.3629	60%	237.4	127.1	0.5355
70%	276.9	113.6	0.4102	70%	276.9	146.4	0.5288
80%	316.5	147.2	0.4650	80%	316.5	172.1	0.5438
90%	356.0	188.5	0.5295	90%	356.0	203.6	0.5718
100%	395.6	240.1	0.6070	100%	395.6	240.1	0.6070

Expected Chiller operation

tons	2 Chillers	1 chiller	eff
200	25%	50%	0.3098
300	38%	75%	0.3629
450	56%	113%	0.3629
550	69%	138%	0.5355
500	63%	125%	0.5355
350	36%	88%	0.3098
250	31%	63%	0.3629

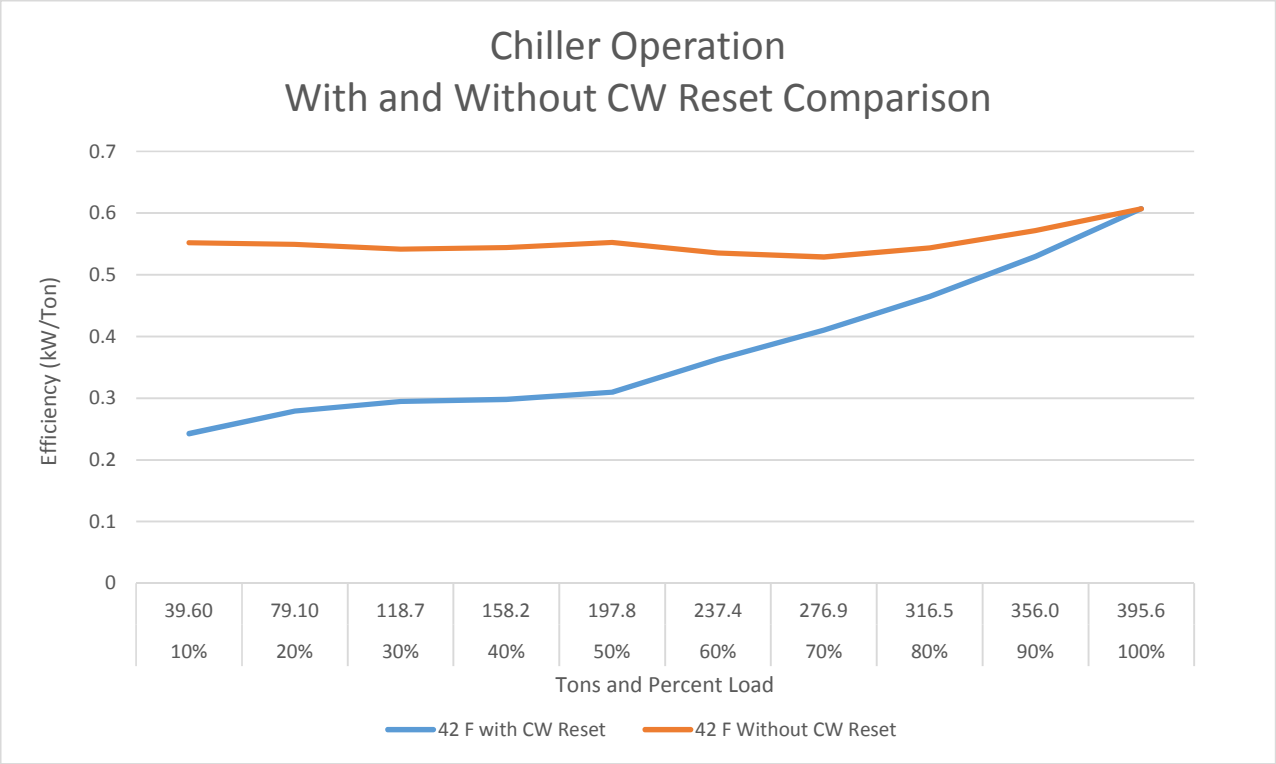

SAVINGS CALCULATION

ECM-7 Building Automation System

SUMMARY

Title	**Control Upgrades**
ECM#	**7**
Project:	**SCI Houtzdale**
Site:	**SCI Houtzdale**

Given	Electric Energy Costs		$/kWh	
	Electric Demand Charge		$/kWd	
	Demand Utilization Factor (DUF)	*80%*		(Estimate, percent of time that fan system is on during peak demand period)
	Heating Costs		$/MCF	
	Cooling Costs		$/kWh	

Formula	**EXISTING CONDITIONS**	
	Existing Supply Fan kWh Used	(Supply Fan Horsepower x Load Factor x (% Airflow^Fan Exponent) x 0.746 / Motor Efficiency) x (Annual Op Hours x % of Time at % Airflow)
	Existing Supply Fan kW Demand	(Supply Fan Horsepower x Load Factor x (% Airflow^Fan Exponent) x 0.746 / Motor Efficiency) x (% of Time at % Airflow x DUF x Months/year)
	Existing Return Fan kWh Used	(Return Fan Horsepower x Load Factor x (% Airflow^Fan Exponent) x 0.746 / Motor Efficiency) x (Annual Op Hours x % of Time at % Airflow)
	Existing Return Fan kW Demand	(Return Fan Horsepower x Load Factor x (% Airflow^Fan Exponent) x 0.746 / Motor Efficiency) x (% of Time at % Airflow x DUF x Months/year)
	Existing Heating Required	(1.08 x [(Supply Fan CFM) x (% Airflow)] x (Temp lvg - Temp ent) x Op Hours x % of Time at % of Airflow x (Htg Hrs / Tot. Hrs per Yr) x % of Total Hrs Htg at Full Load) / 1,000,000
	Existing Cooling Required	(4.5 x [(Supply Fan CFM) x (% Airflow)] x (h ent - h lvg) x Op Hours x Bin Hrs at % of Airflow /12,000 x kW/ton
	PROPOSED CONDITIONS	
	Proposed Supply Fan kWh Used	(SF HP x Load Factor x (% Airflow^Fan Exponent) x 0.746 / Motor Efficiency) x (Annual Op Hours x % of Time at % Airflow)
	Proposed Supply Fan kW Demand	(SF HP x Load Factor x (% Airflow^Fan Exponent) x 0.746 / Motor Efficiency) x (% of Time at % Airflow x DUF x Months/year)
	Proposed Return Fan kWh Used	(RF HP x Load Factor x (% Airflow^Fan Exponent) x 0.746 / Motor Efficiency) x (Annual Op Hours x % of Time at % Airflow)
	Proposed Return Fan kW Demand	(RF HP x Load Factor x (% Airflow^Fan Exponent) x 0.746 / Motor Efficiency) x (% of Time at % Airflow x DUF x Months/year)
	Proposed Heating Required	(1.08 x [(SF CFM) x (% Airflow)] x (T lvg - T ent) x Op Hours x % of Time at % of Airflow x (Htg Hrs / Tot. Hrs per Yr) x % of Total Hrs Htg at Full Load) / 1,000,000
	Proposed Cooling Required	(4.5 x [(Supply Fan CFM) x (% Airflow)] x (h ent - h lvg) x Op Hours x Bin Hrs at % of Airflow /12,000 x kW/ton
	*NOTE: THIS CALCULATION IS DONE AT EVERY AIRFLOW	

Result	**Annual Existing Fan Consumption All AHUS**	**2,253,360**	**kWh**	**=>**	$	-
	Annual Existing Cooling Demand	**599**	**Tons**	**=>**		
	Annual Existing Heating Consumption	**156,957**	**CCF**	**=>**	$	-
	Annual Existing Cooling Consumption	**813,559**	**kWh**	**=>**	$	-
	TOTAL EXIST COST PER YEAR				**$**	**-**
	Annual Proposed Fan Consumption	**1,932,877**	**kWh**	**=>**	$	-
	Annual Proposed Cooling Demand	**599**	**Tons**	**=>**		
	Annual Proposed Heating Consumption	**105,578**	**CCF**		$	-
	Annual Proposed Cooling Consumption	**786,130**	**kWh**	**=>**	$	-
	TOTAL NEW COST PER YEAR				**$**	**-**
	Annual Fan Savings	**320,483**	**kWh**	**=>**	$	-
	Annual Demand Savings			**=>**	$	-
	Annual Heating Savings	**51,380**	**CCF**		$	-
	Annual Cooling Savings	**27,429**	**kWh**	**=>**	$	-
	TOTAL SAVINGS PER YEAR				**$**	**-**

Title	**Control Upgrades**
ECM#	**7**
Project:	**SCI Houtzdale**
Site:	**SCI Houtzdale**
Unit #:	**AHU-1**

CONVERSION FACTORS				Design Conditions		
SLR	**93%**	Sensible	/latent	Supply CFM	4,500	
FANHP (F.L.)	**3.55**	HP@	4,500	Total Cooling	104,250	158,000
RAFHP (F.L.)	-	HP@	3,825	Sensible Cooling	96,714	
FMEFF	**88%**	Percent		Air Side TD	19.90	
CFMREF	**4,500**	CFM		Supply HP	5	
DREFF	**97%**	Percent	(@F.L.)	T.S.P.	3.0	
MINVOL	**1,800**	CFM	CFM	Supply Fan Eff	60%	
Conv. Fact.	6,344	60	0.24	Return CFM	3,825	
Off Coil Conditions	62	26.47	28	Return T.S.P.	-	
Btu/CCF	102,800	Heat EX Eff Wtr:		Return Fan HP	-	
kW/Ton	0.65	Heat EX Eff Smr:		Return Fan Eff	60%	

Existing Operation

Bin DB temp/ WetBulb	Average Temp	enthapy OA btu/lb	enthapy Mixed Air btu/lb	Bin hrs	SA air flow CFM	Fan kW	Fan kWh	OA air flow CFM	Discharge Air Temp	MAT Air Temp	Space Temp setpoint	Total Cooling BTU/Hr	Total Cooling kWh/year	Total Cooling Demand Tons	Total Heating BTU/Hr	Total Reheat BTU/Hr	Run Fraction	Existing Heating CCF/year
-15 -11 / -12.6	-12.5	0.0		0	4,500	3.024	-	675	75.0°	59.3°	72°				76,181		100%	-
-10 -6 / -7.1	-7.5	0.0		0	4,500	3.024	-	675	75.0°	60.1°	72°				72,536		100%	-
-5 -1 / -2.9	-2.5	0.0		0	4,500	3.024	-	675	75.0°	60.8°	72°				68,891		100%	-
0-4/1	2.5	0.0		2	4,500	3.024	6	675	75.0°	61.6°	72°				65,246		41%	0.67
5-9/6	7.5	2.9		5	4,500	3.024	15	675	75.0°	62.3°	72°				61,601		39%	1.50
10-14/11	12.5	4.2		77	4,500	3.024	233	675	75.0°	63.1°	72°				57,956		37%	20.41
15-19/15	17.5	5.7		270	4,500	3.024	816	675	75.0°	63.8°	72°				54,311		34%	62.86
20-24/20	22.5	7.3		452	4,500	3.024	1,367	675	75.0°	64.6°	72°				50,666		32%	91.58
25-29/25	27.5	9.0		411	4,500	3.024	1,243	675	75.0°	65.3°	72°				47,021		30%	71.73
30-34/30	32.5	11.1		897	4,500	3.024	2,712	675	75.0°	66.1°	72°				43,376		27%	133.21
35-39/34	37.5	12.8		808	4,500	3.024	2,443	675	75.0°	66.8°	72°				39,731		25%	100.67
40-44/38	42.5	15.1		722	4,500	3.024	2,183	675	75.0°	67.6°	72°				36,086		23%	74.21
45-49/42	47.5	17.0		512	4,500	3.024	1,548	675	75.0°	68.3°	72°				32,441		30%	62.14
50-54/47	52.5	19.7	25.8	659	4,500	3.024	1,993	675	61.6°	69.1°	72°	36,329	452	3.03	-		35%	
55-59/52	57.5	22.9	26.0	829	4,500	3.024	2,507	675	61.6°	69.8°	72°	39,974	688	3.33	-		38%	
60-64/56	62.5	25.7	26.2	1010	4,500	3.024	3,054	675	61.6°	70.6°	72°	43,619	998	3.63	-		42%	
65-69/60	67.5	28.7	26.4	812	4,500	3.024	2,455	675	61.6°	71.3°	72°	47,264	942	3.94			45%	
70-74/63	72.5	31.0	26.6	470	4,500	3.024	1,421	675	61.6°	72.1°	72°	50,909	633	4.24			49%	
75-79/66	77.5	32.4	26.8	436	4,500	3.024	1,318	675	61.6°	72.8°	72°	54,554	674	4.55			52%	
80-84/69	82.5	33.8	26.9	265	4,500	3.024	801	675	61.6°	73.6°	72°	58,199	466	4.85			56%	
85-89/72	87.5	36.5	27.1	106	4,500	3.024	321	675	61.6°	74.3°	72°	61,844	211	5.15			59%	
90-94/73	92.5	39.2	27.3	17	4,500	3.024	51	675	61.6°	75.1°	72°	65,489	38	5.46			63%	
				8,760.00			26,488						5,103	5.46				619

CONVERSION FACTORS				Design Conditions		
SLR	**93%**	Sensible	/latent	Supply CFM	4,500	
FANHP (F.L.)	**3.55**	HP@	4,500	Total Cooling	104,250	158,000
RAFHP (F.L.)	-	HP@	3,825	Sensible Cooling	96,714	
FMEFF	**88%**	Percent		Air Side TD	19.90	
CFMREF	**4,500**	CFM		Supply HP	5.00	
DREFF	**97%**	Percent	(@F.L.)	T.S.P.	3.0	
MINVOL	**1,800**	CFM	CFM	Supply Fan Eff	60%	
Conv. Fact.	6,344	60	0.24	Return CFM	3,825	
Off Coil Conditions	62	26.47	28	Return T.S.P.	-	
Btu/CCF	102,800	Heat EX Eff Wtr:		Return Fan HP	-	
kW/Ton	0.65	Heat EX Eff Smr:		Return Fan Eff	60%	

Proposed Operation

Bin DB temp/ WetBulb	Average Temp	enthapy OA btu/lb	enthapy Mixed Air btu/lb	Bin hrs	SA air flow CFM	Fan kW	Fan kWh	OA air flow CFM	Discharge Air Temp	MAT Air Temp	Space Temp setpoint	Total Cooling BTU/Hr	Total Cooling kWh/year	Total Cooling Demand Tons	Total Heating BTU/Hr	Total Reheat BTU/Hr	Run Fraction	Proposed Heating CCF/year
-15 -11 / -12.6	-12.5	0.0		0	4,500	3.024	-	675	75.0°	59.3°	72°				76,181		100%	-
-10 -6 / -7.1	-7.5	0.0		0	4,500	3.024	-	675	75.0°	60.1°	72°				72,536		100%	-
-5 -1 / -2.9	-2.5	0.0		0	4,500	3.024	-	675	75.0°	60.8°	72°				68,891		100%	-
0-4/1	2.5	0.0		2	4,500	3.024	6	675	75.0°	61.6°	72°				65,246		41%	0.67
5-9/6	7.5	2.9		5	4,500	3.024	15	675	74.0°	62.3°	72°				56,741		39%	1.38
10-14/11	12.5	4.2		77	4,500	3.024	233	675	73.0°	63.1°	72°				48,236		37%	16.99
15-19/15	17.5	5.7		270	4,500	3.024	816	675	72.0°	63.8°	72°				39,731		34%	45.99
20-24/20	22.5	7.3		452	4,500	3.024	1,367	675	72.0°	64.6°	72°				36,086		32%	65.23
25-29/25	27.5	9.0		411	4,500	3.024	1,243	675	72.0°	65.3°	72°				32,441		30%	49.48
30-34/30	32.5	11.1		897	4,500	3.024	2,712	675	72.0°	66.1°	72°				28,796		27%	88.43
35-39/34	37.5	12.8		808	4,500	3.024	2,443	675	72.0°	66.8°	72°				25,151		25%	63.73
40-44/38	42.5	15.1		722	4,500	3.024	2,183	675	72.0°	67.6°	72°				21,506		23%	44.23
45-49/42	47.5	17.0		512	4,500	3.024	1,548	675	72.0°	68.3°	72°				17,861		30%	34.21
50-54/47	52.5	19.7	25.8	659	4,500	3.024	1,993	675	61.6°	69.1°	72°	36,329	452	3.03	-		35%	
55-59/52	57.5	22.9	26.0	829	4,500	3.024	2,507	675	61.6°	69.8°	72°	39,974	688	3.33	-		38%	
60-64/56	62.5	25.7	26.2	1010	4,500	3.024	3,054	675	61.6°	70.6°	72°	43,619	998	3.63	-		42%	
65-69/60	67.5	28.7	26.4	812	4,500	3.024	2,455	675	61.6°	71.3°	72°	47,264	942	3.94			45%	
70-74/63	72.5	31.0	26.6	470	4,500	3.024	1,421	675	61.6°	72.1°	72°	50,909	633	4.24			49%	
75-79/66	77.5	32.4	26.8	436	4,500	3.024	1,318	675	61.6°	72.8°	72°	54,554	674	4.55			52%	
80-84/69	82.5	33.8	26.9	265	4,500	3.024	801	675	61.6°	73.6°	72°	58,199	466	4.85			56%	
85-89/72	87.5	36.5	27.1	106	4,500	3.024	321	675	61.6°	74.3°	72°	61,844	211	5.15			59%	
90-94/73	92.5	39.2	27.3	17	4,500	3.024	51	675	61.6°	75.1°	72°	65,489	38	5.46			63%	
				8,760.00			26,488						5,103	5.46				410

AHU-1 G Block

Title	**Control Upgrades**
ECM#	**7**
Project:	**SCI Houtzdale**
Site:	**SCI Houtzdale**
Unit #:	**AHU-2**

CONVERSION FACTORS				Design Conditions		
SLR	**82%**	Sensible	/latent	Supply CFM	5,500	
FANHP (F.L.)	**4.33**	HP@	5,500	Total Cooling	170,250	160,000
RAFHP (F.L.)	**-**	HP@	4,675	Sensible Cooling	139,590	
FMEFF	**90%**	Percent		Air Side TD	23.50	
CFMREF	**5,500**	CFM		Supply HP	8	
DREFF	**97%**	Percent	(@F.L.)	T.S.P.	3.0	
MINVOL	**2,200**	CFM	CFM	Supply Fan Eff	60%	
Conv. Fact.	6,344	60	0.24	Return CFM	4,675	
Off Coil Conditions	57	24.18	28	Return T.S.P.	-	
Btu/CCF	102,800	Heat EX Eff Wtr:		Return Fan HP		
kW/Ton	0.65	Heat EX Eff Smr:		Return Fan Eff	60%	

Existing Operation

Bin DB temp/ WetBulb	Average Temp	enthapy OA btu/lb	enthapy Mixed Air btu/lb	Bin hrs	SA air flow CFM	Fan kW	Fan kWh	OA air flow CFM	Discharge Air Temp	MAT Air Temp	Heat Pipe Air Temp DT °F	MAT Air Temp w/ Hpipe	Space Temp setpoint	Total Cooling BTU/Hr	Total Cooling kWh/year	Total Cooling Demand Tons	Total Heating BTU/Hr	Total Reheat BTU/Hr	Run Fraction	Existing Heating CCF/year
-15 -11 / -12.6	-12.5	0.0		0	5,500	3.613	-	825	79.1°	59.3°	0.0°	59.3°	72°				117,464		100%	-
-10 -6 / -7.1	-7.5	0.0		0	5,500	3.613	-	825	79.1°	60.1°	0.0°	60.1°	72°				113,009		100%	-
-5 -1 / -2.9	-2.5	0.0		0	5,500	3.613	-	825	79.1°	60.8°	0.0°	60.8°	72°				108,554		100%	-
0-4/1	2.5	0.0		2	5,500	3.613	7	825	79.1°	61.6°	0.0°	61.6°	72°				104,099		65%	1.69
5-9/6	7.5	2.9		5	5,500	3.613	18	825	79.1°	62.3°	0.0°	62.3°	72°				99,644		62%	3.87
10-14/11	12.5	4.2		77	5,500	3.613	278	825	79.1°	63.1°	0.0°	63.1°	72°				95,189		59%	54.38
15-19/15	17.5	5.7		270	5,500	3.613	976	825	79.1°	63.8°	0.0°	63.8°	72°				90,734		57%	173.26
20-24/20	22.5	7.3		452	5,500	3.613	1,633	825	79.1°	64.6°	0.0°	64.6°	72°				86,279		54%	262.26
25-29/25	27.5	9.0		411	5,500	3.613	1,485	825	79.1°	65.3°	0.0°	65.3°	72°				81,824		51%	214.48
30-34/30	32.5	11.1		897	5,500	3.613	3,241	825	79.1°	66.1°	0.0°	66.1°	72°				77,369		48%	418.52
35-39/34	37.5	12.8		808	5,500	3.613	2,919	825	79.1°	66.8°	0.0°	66.8°	72°				72,914		46%	334.83
40-44/38	42.5	15.1		722	5,500	3.613	2,609	825	79.1°	67.6°	0.0°	67.6°	72°				68,459		43%	263.75
45-49/42	47.5	17.0		512	5,500	3.613	1,850	825	79.1°	68.3°	0.0°	68.3°	72°				64,003		40%	163.47
50-54/47	52.5	19.7	25.8	659	5,500	3.613	2,381	825	56.7°	69.1°	0.0°	69.1°	72°	73,508	1,133	6.13	-		43%	
55-59/52	57.5	22.9	26.0	829	5,500	3.613	2,995	825	56.7°	69.8°	0.0°	69.8°	72°	77,963	1,603	6.50	-		46%	
60-64/56	62.5	25.7	26.2	1010	5,500	3.613	3,649	825	56.7°	70.6°	0.0°	70.6°	72°	82,418	2,183	6.87	-		48%	
65-69/60	67.5	28.7	26.4	812	5,500	3.613	2,934	825	56.7°	71.3°	0.0°	71.3°	72°	86,873	1,950	7.24			51%	
70-74/63	72.5	31.0	26.6	470	5,500	3.613	1,698	825	56.7°	72.1°	0.0°	72.1°	72°	91,328	1,247	7.61			54%	
75-79/66	77.5	32.4	26.8	436	5,500	3.613	1,575	825	56.7°	72.8°	0.0°	72.8°	72°	95,783	1,273	7.98			56%	
80-84/69	82.5	33.8	26.9	265	5,500	3.613	957	825	56.7°	73.6°	0.0°	73.6°	72°	100,238	847	8.35			59%	
85-89/72	87.5	36.5	27.1	106	5,500	3.613	383	825	56.7°	74.3°	0.0°	74.3°	72°	104,693	370	8.72			61%	
90-94/73	92.5	39.2	27.3	17	5,500	3.613	61	825	56.7°	75.1°	0.0°	75.1°	72°	109,148	64	9.10			64%	
				8,760.00			31,651								10,670	9.10				1,891

CONVERSION FACTORS				Design Conditions		
SLR	**82%**	Sensible	/latent	Supply CFM	5,500	
FANHP (F.L.)	**4.33**	HP@	5,500	Total Cooling	170,250	160,000
RAFHP (F.L.)	**-**	HP@	4,675	Sensible Cooling	139,590	
FMEFF	**90%**	Percent		Air Side TD	23.50	
CFMREF	**5,500**	CFM		Supply HP	8	
DREFF	**97%**	Percent	(@F.L.)	T.S.P.	3.0	
MINVOL	**2,200**	CFM	CFM	Supply Fan Eff	60%	
Conv. Fact.	6,344	60	0.24	Return CFM	4,675	
Off Coil Conditions	57	24.18	28	Return T.S.P.	-	
Btu/CCF	102,800	Heat EX Eff Wtr:		Return Fan HP		
kW/Ton	0.65	Heat EX Eff Smr:		Return Fan Eff	60%	

Proposed Operation

Bin DB temp/ WetBulb	Average Temp	enthapy OA btu/lb	enthapy Mixed Air btu/lb	Bin hrs	SA air flow CFM	Fan kW	Fan kWh	OA air flow CFM	Discharge Air Temp	MAT Air Temp	Heat Pipe Air Temp DT °F	MAT Air Temp w/ Hpipe	Space Temp setpoint	Total Cooling BTU/Hr	Total Cooling kWh/year	Total Cooling Demand Tons	Total Heating BTU/Hr	Total Reheat BTU/Hr	Run Fraction	Proposed Heating CCF/year
-15 -11 / -12.6	-12.5	0.0		0	5,500	3.613	-	825	79.1°	59.3°	0.0°	59.3°	72°				117,464		100%	-
-10 -6 / -7.1	-7.5	0.0		0	5,500	3.613	-	825	79.1°	60.1°	0.0°	60.1°	72°				113,009		100%	-
-5 -1 / -2.9	-2.5	0.0		0	5,500	3.613	-	825	79.1°	60.8°	0.0°	60.8°	72°				108,554		100%	-
0-4/1	2.5	0.0		2	5,500	3.613	7	825	79.1°	61.6°	0.0°	61.6°	72°				104,099		65%	1.69
5-9/6	7.5	2.9		5	5,500	3.613	18	825	78.1°	62.3°	0.0°	62.3°	72°				93,704		62%	3.64
10-14/11	12.5	4.2		77	5,500	3.613	278	825	77.1°	63.1°	0.0°	63.1°	72°				83,309		59%	47.59
15-19/15	17.5	5.7		270	5,500	3.613	976	825	76.1°	63.8°	0.0°	63.8°	72°				72,914		57%	139.23
20-24/20	22.5	7.3		452	5,500	3.613	1,633	825	75.1°	64.6°	0.0°	64.6°	72°				62,518		54%	190.04
25-29/25	27.5	9.0		411	5,500	3.613	1,485	825	74.1°	65.3°	0.0°	65.3°	72°				52,123		51%	136.63
30-34/30	32.5	11.1		897	5,500	3.613	3,241	825	73.1°	66.1°	0.0°	66.1°	72°				41,728		48%	225.73
35-39/34	37.5	12.8		808	5,500	3.613	2,919	825	72.1°	66.8°	0.0°	66.8°	72°				31,333		46%	143.89
40-44/38	42.5	15.1		722	5,500	3.613	2,609	825	72.1°	67.6°	0.0°	67.6°	72°				26,878		43%	103.55
45-49/42	47.5	17.0		512	5,500	3.613	1,850	825	72.1°	68.3°	0.0°	68.3°	72°				22,423		40%	57.27
50-54/47	52.5	19.7	25.8	659	5,500	3.613	2,381	825	56.7°	69.1°	0.0°	69.1°	72°	73,508	1,133	6.13	-		43%	
55-59/52	57.5	22.9	26.0	829	5,500	3.613	2,995	825	56.7°	69.8°	0.0°	69.8°	72°	77,963	1,603	6.50	-		46%	
60-64/56	62.5	25.7	26.2	1010	5,500	3.613	3,649	825	56.7°	70.6°	0.0°	70.6°	72°	82,418	2,183	6.87	-		48%	
65-69/60	67.5	28.7	26.4	812	5,500	3.613	2,934	825	56.7°	71.3°	0.0°	71.3°	72°	86,873	1,950	7.24			51%	
70-74/63	72.5	31.0	26.6	470	5,500	3.613	1,698	825	56.7°	72.1°	0.0°	72.1°	72°	91,328	1,247	7.61			54%	
75-79/66	77.5	32.4	26.8	436	5,500	3.613	1,575	825	56.7°	72.8°	0.0°	72.8°	72°	95,783	1,273	7.98			56%	
80-84/69	82.5	33.8	26.9	265	5,500	3.613	957	825	56.7°	73.6°	0.0°	73.6°	72°	100,238	847	8.35			59%	
85-89/72	87.5	36.5	27.1	106	5,500	3.613	383	825	56.7°	74.3°	0.0°	74.3°	72°	104,693	370	8.72			61%	
90-94/73	92.5	39.2	27.3	17	5,500	3.613	61	825	56.7°	75.1°	0.0°	75.1°	72°	109,148	64	9.10			64%	
				8,760.00			31,651								10,670	9.10				1,049

Title	**Control Upgrades**
ECM#	**7**
Project:	**SCI Houtzdale**
Site:	**SCI Houtzdale**
Unit #:	**AHU-3**

CONVERSION FACTORS				Design Conditions		
SLR	**93%**	Sensible	/latent	Supply CFM	4,500	
FANHP (F.L.)	**3.27**	HP@	4,500	Total Cooling	104,250	130,000
RAFHP (F.L.)	-	HP@	3,825	Sensible Cooling	97,200	
FMEFF	**88%**	Percent		Air Side TD	20.00	
CFMREF	**4,500**	CFM		Supply HP	5	
DREFF	**97%**	Percent	(@F.L.)	T.S.P.	3.0	
MINVOL	**1,800**	CFM	CFM	Supply Fan Eff	65%	
Conv. Fact.	6,344	60	0.24	Return CFM	3,825	
Off Coil Conditions	61	26.24	28	Return T.S.P.	-	
Btu/CCF	102,800	Heat EX Eff Wtr:		Return Fan HP		
kW/Ton	0.65	Heat EX Eff Smr:		Return Fan Eff	60%	

Existing Operation

Bin DB temp/ WetBulb	Average Temp	enthapy OA btu/lb	enthapy Mixed Air btu/lb	Bin hrs	SA air flow CFM	Fan kW	Fan kWh	OA air flow CFM	Discharge Air Temp	MAT Air Temp	Heat Pipe Air Temp DT °F	MAT Air Temp w/ Hpipe	Space Temp setpoint	Total Cooling BTU/Hr	Total Cooling kWh/year	Total Cooling Demand Tons	Total Heating BTU/Hr	Total Reheat BTU/Hr	Run Fraction	Existing Heating CCF/year
-15 -11 / -12.6	-12.5	0.0		0	4,500	2.791	-	675	75.0°	59.3°	0.0°	59.3°	72°				76,181		100%	-
-10 -6 / -7.1	-7.5	0.0		0	4,500	2.791	-	675	75.0°	60.1°	0.0°	60.1°	72°				72,536		100%	-
-5 -1 / -2.9	-2.5	0.0		0	4,500	2.791	-	675	75.0°	60.8°	0.0°	60.8°	72°				68,891		100%	-
0-4/1	2.5	0.0		2	4,500	2.791	6	675	75.0°	61.6°	0.0°	61.6°	72°				65,246		50%	0.82
5-9/6	7.5	2.9		5	4,500	2.791	14	675	75.0°	62.3°	0.0°	62.3°	72°				61,601		47%	1.82
10-14/11	12.5	4.2		77	4,500	2.791	215	675	75.0°	63.1°	0.0°	63.1°	72°				57,956		45%	24.81
15-19/15	17.5	5.7		270	4,500	2.791	754	675	75.0°	63.8°	0.0°	63.8°	72°				54,311		42%	76.40
20-24/20	22.5	7.3		452	4,500	2.791	1,262	675	75.0°	64.6°	0.0°	64.6°	72°				50,666		39%	111.31
25-29/25	27.5	9.0		411	4,500	2.791	1,147	675	75.0°	65.3°	0.0°	65.3°	72°				47,021		36%	87.17
30-34/30	32.5	11.1		897	4,500	2.791	2,504	675	75.0°	66.1°	0.0°	66.1°	72°				43,376		33%	161.90
35-39/34	37.5	12.8		808	4,500	2.791	2,255	675	75.0°	66.8°	0.0°	66.8°	72°				39,731		31%	122.36
40-44/38	42.5	15.1		722	4,500	2.791	2,015	675	75.0°	67.6°	0.0°	67.6°	72°				36,086		28%	90.19
45-49/42	47.5	17.0		512	4,500	2.791	1,429	675	75.0°	68.3°	0.0°	68.3°	72°				32,441		45%	93.21
50-54/47	52.5	19.7	25.8	659	4,500	2.791	1,839	675	60.8°	69.1°	0.0°	69.1°	72°	40,217	554	3.35	-		39%	
55-59/52	57.5	22.9	26.0	829	4,500	2.791	2,314	675	60.8°	69.8°	0.0°	69.8°	72°	43,862	829	3.66	-		42%	
60-64/56	62.5	25.7	26.2	1010	4,500	2.791	2,819	675	60.8°	70.6°	0.0°	70.6°	72°	47,507	1,184	3.96	-		46%	
65-69/60	67.5	28.7	26.4	812	4,500	2.791	2,266	675	60.8°	71.3°	0.0°	71.3°	72°	51,152	1,104	4.26			49%	
70-74/63	72.5	31.0	26.6	470	4,500	2.791	1,312	675	60.8°	72.1°	0.0°	72.1°	72°	54,797	733	4.57			53%	
75-79/66	77.5	32.4	26.8	436	4,500	2.791	1,217	675	60.8°	72.8°	0.0°	72.8°	72°	58,442	774	4.87			56%	
80-84/69	82.5	33.8	26.9	265	4,500	2.791	740	675	60.8°	73.6°	0.0°	73.6°	72°	62,087	531	5.17			60%	
85-89/72	87.5	36.5	27.1	106	4,500	2.791	296	675	60.8°	74.3°	0.0°	74.3°	72°	65,732	238	5.48			63%	
90-94/73	92.5	39.2	27.3	17	4,500	2.791	47	675	60.8°	75.1°	0.0°	75.1°	72°	69,377	43	5.78			67%	
				8,760.00			24,451								5,989	5.78				770

CONVERSION FACTORS				Design Conditions		
	93%	Sensible	/latent	Supply CFM	4,500	
FANHP (F.L.)	**3.27**	HP@	4,500	Total Cooling	104,250	130,000
RAFHP (F.L.)	-	HP@	3,825	Sensible Cooling	97,200	
FMEFF	**88%**	Percent		Air Side TD	20.00	
CFMREF	**4,500**	CFM		Supply HP	5	
DREFF	**97%**	Percent	(@F.L.)	T.S.P.	3.0	
MINVOL	**1,800**	CFM	CFM	Supply Fan Eff	0.7	
Conv. Fact.	6,344	60	0.24	Return CFM	3,825	
Off Coil Conditions	61	26.24	28	Return T.S.P.	-	
Ht Pmp COP	102,800	Heat EX Eff Wtr:		Return Fan HP		
kW/Ton	0.65	Heat EX Eff Smr:		Return Fan Eff	60%	

Proposed Operation

Bin DB temp/ WetBulb	Average Temp	enthapy OA btu/lb	enthapy Mixed Air btu/lb	Bin hrs	SA air flow CFM	Fan kW	Fan kWh	OA air flow CFM	Discharge Air Temp	MAT Air Temp	Heat Pipe Air Temp DT °F	MAT Air Temp w/ Hpipe	Space Temp setpoint	Total Cooling BTU/Hr	Total Cooling kWh/year	Total Cooling Demand Tons	Total Heating BTU/Hr	Total Reheat BTU/Hr	Run Fraction	Proposed Heating CCF/year
-15 -11 / -12.6	-12.5	0.0		0	4,500	2.791	-	675	75.0°	59.3°	0.0°	59.3°	72°				76,181		100%	-
-10 -6 / -7.1	-7.5	0.0		0	4,500	2.791	-	675	75.0°	60.1°	0.0°	60.1°	72°				72,536		100%	-
-5 -1 / -2.9	-2.5	0.0		0	4,500	2.791	-	675	75.0°	60.8°	0.0°	60.8°	72°				68,891		100%	-
0-4/1	2.5	0.0		2	4,500	2.791	6	675	75.0°	61.6°	0.0°	61.6°	72°				65,246		50%	0.82
5-9/6	7.5	2.9		5	4,500	2.791	14	675	74.0°	62.3°	0.0°	62.3°	72°				56,741		47%	1.68
10-14/11	12.5	4.2		77	4,500	2.791	215	675	73.0°	63.1°	0.0°	63.1°	72°				48,236		45%	20.65
15-19/15	17.5	5.7		270	4,500	2.791	754	675	72.0°	63.8°	0.0°	63.8°	72°				39,731		42%	55.89
20-24/20	22.5	7.3		452	4,500	2.791	1,262	675	72.0°	64.6°	0.0°	64.6°	72°				36,086		39%	79.28
25-29/25	27.5	9.0		411	4,500	2.791	1,147	675	72.0°	65.3°	0.0°	65.3°	72°				32,441		36%	60.14
30-34/30	32.5	11.1		897	4,500	2.791	2,504	675	72.0°	66.1°	0.0°	66.1°	72°				28,796		33%	107.48
35-39/34	37.5	12.8		808	4,500	2.791	2,255	675	72.0°	66.8°	0.0°	66.8°	72°				25,151		31%	77.46
40-44/38	42.5	15.1		722	4,500	2.791	2,015	675	72.0°	67.6°	0.0°	67.6°	72°				21,506		28%	53.75
45-49/42	47.5	17.0		512	4,500	2.791	1,429	675	72.0°	68.3°	0.0°	68.3°	72°				17,861		45%	51.32
50-54/47	52.5	19.7	25.8	659	4,500	2.791	1,839	675	60.8°	69.1°	0.0°	69.1°	72°	40,217	554	3.35	-		39%	
55-59/52	57.5	22.9	26.0	829	4,500	2.791	2,314	675	60.8°	69.8°	0.0°	69.8°	72°	43,862	829	3.66	-		42%	
60-64/56	62.5	25.7	26.2	1010	4,500	2.791	2,819	675	60.8°	70.6°	0.0°	70.6°	72°	47,507	1,184	3.96	-		46%	
65-69/60	67.5	28.7	26.4	812	4,500	2.791	2,266	675	60.8°	71.3°	0.0°	71.3°	72°	51,152	1,104	4.26			49%	
70-74/63	72.5	31.0	26.6	470	4,500	2.791	1,312	675	60.8°	72.1°	0.0°	72.1°	72°	54,797	733	4.57			53%	
75-79/66	77.5	32.4	26.8	436	4,500	2.791	1,217	675	60.8°	72.8°	0.0°	72.8°	72°	58,442	774	4.87			56%	
80-84/69	82.5	33.8	26.9	265	4,500	2.791	740	675	60.8°	73.6°	0.0°	73.6°	72°	62,087	531	5.17			60%	
85-89/72	87.5	36.5	27.1	106	4,500	2.791	296	675	60.8°	74.3°	0.0°	74.3°	72°	65,732	238	5.48			63%	
90-94/73	92.5	39.2	27.3	17	4,500	2.791	47	675	60.8°	75.1°	0.0°	75.1°	72°	69,377	43	5.78			67%	
				8,760.00			24,451								5,989	5.78				508

Title	**Control Upgrades**
ECM#	**7**
Project:	**SCI Houtzdale**
Site:	**SCI Houtzdale**
Unit #:	**AHU-4**

CONVERSION FACTORS				Design Conditions		
SLR	**76%**	Sensible	/latent	Supply CFM	2,500	
FANHP (F.L.)	**2.12**	HP@	2,500	Total Cooling	87,750	94,000
RAFHP (F.L.)	**0.15**	HP@	2,125	Sensible Cooling	66,420	
FMEFF	**88%**	Percent		Air Side TD	24.60	
CFMREF	**2,500**	CFM		Supply HP	3	
DREFF	**97%**	Percent	(@F.L.)	T.S.P.	3.5	
MINVOL	**1,000**	CFM	CFM	Supply Fan Eff	65%	
Conv. Fact.	6,344	60	0.24	Return CFM	2,125	
Off Coil Conditions	57	24.18	28	Return T.S.P.	1.5	
Btu/CCF	102,800	Heat EX Eff Wtr:		Return Fan HP	0.5	
kW/Ton	0.65	Heat EX Eff Smr:		Return Fan Eff	60%	

Existing Operation

Bin DB temp/ WetBulb	Average Temp	enthapy OA btu/lb	enthapy Mixed Air btu/lb	Bin hrs	SA air flow CFM	Fan kW	Fan kWh	OA air flow CFM	Discharge Air Temp	MAT Air Temp	Heat Pipe Air Temp DT °F	MAT Air Temp w/ Hpipe	Space Temp setpoint	Total Cooling BTU/Hr	Total Cooling kWh/year	Total Cooling Demand Tons	Total Heating BTU/Hr	Total Reheat BTU/Hr	Run Fraction	Existing Heating CCF/year
-15 -11 / -12.6	-12.5	0.0		0	2,500	1.943	-	375	75.0°	59.3°	0.0°	59.3°	72°				42,323		100%	-
-10 -6 / -7.1	-7.5	0.0		0	2,500	1.943	-	375	75.0°	60.1°	0.0°	60.1°	72°				40,298		100%	-
-5 -1 / -2.9	-2.5	0.0		0	2,500	1.943	-	375	75.0°	60.8°	0.0°	60.8°	72°				38,273		100%	-
0-4/1	2.5	0.0		2	2,500	1.943	4	375	75.0°	61.6°	0.0°	61.6°	72°				36,248		39%	0.35
5-9/6	7.5	2.9		5	2,500	1.943	10	375	75.0°	62.3°	0.0°	62.3°	72°				34,223		36%	0.78
10-14/11	12.5	4.2		77	2,500	1.943	150	375	75.0°	63.1°	0.0°	63.1°	72°				32,198		34%	10.59
15-19/15	17.5	5.7		270	2,500	1.943	525	375	75.0°	63.8°	0.0°	63.8°	72°				30,173		32%	32.61
20-24/20	22.5	7.3		452	2,500	1.943	878	375	75.0°	64.6°	0.0°	64.6°	72°				28,148		30%	47.51
25-29/25	27.5	9.0		411	2,500	1.943	798	375	75.0°	65.3°	0.0°	65.3°	72°				26,123		28%	37.21
30-34/30	32.5	11.1		897	2,500	1.943	1,743	375	75.0°	66.1°	0.0°	66.1°	72°				24,098		26%	69.11
35-39/34	37.5	12.8		808	2,500	1.943	1,570	375	75.0°	66.8°	0.0°	66.8°	72°				22,073		23%	52.23
40-44/38	42.5	15.1		722	2,500	1.943	1,403	375	75.0°	67.6°	0.0°	67.6°	72°				20,048		21%	38.50
45-49/42	47.5	17.0		512	2,500	1.943	995	375	75.0°	68.3°	0.0°	68.3°	72°				18,023		35%	40.28
50-54/47	52.5	19.7	25.8	659	2,500	1.943	1,280	375	56.7°	69.1°	0.0°	69.1°	72°	33,413	454	2.78	-		38%	
55-59/52	57.5	22.9	26.0	829	2,500	1.943	1,611	375	56.7°	69.8°	0.0°	69.8°	72°	35,438	643	2.95	-		40%	
60-64/56	62.5	25.7	26.2	1010	2,500	1.943	1,962	375	56.7°	70.6°	0.0°	70.6°	72°	37,463	875	3.12	-		43%	
65-69/60	67.5	28.7	26.4	812	2,500	1.943	1,577	375	56.7°	71.3°	0.0°	71.3°	72°	39,488	782	3.29			45%	
70-74/63	72.5	31.0	26.6	470	2,500	1.943	913	375	56.7°	72.1°	0.0°	72.1°	72°	41,513	500	3.46			47%	
75-79/66	77.5	32.4	26.8	436	2,500	1.943	847	375	56.7°	72.8°	0.0°	72.8°	72°	43,538	510	3.63			50%	
80-84/69	82.5	33.8	26.9	265	2,500	1.943	515	375	56.7°	73.6°	0.0°	73.6°	72°	45,563	340	3.80			52%	
85-89/72	87.5	36.5	27.1	106	2,500	1.943	206	375	56.7°	74.3°	0.0°	74.3°	72°	47,588	148	3.97			54%	
90-94/73	92.5	39.2	27.3	17	2,500	1.943	33	375	56.7°	75.1°	0.0°	75.1°	72°	49,613	26	4.13			57%	
				8,760.00			17,018								4,277	4.13				329

CONVERSION FACTORS				Design Conditions		
	76%	Sensible	/latent	Supply CFM	2,500	
FANHP (F.L.)	**2.12**	HP@	2,500	Total Cooling	87,750	94,000
RAFHP (F.L.)	**0.15**	HP@	2,125	Sensible Cooling	66,420	
FMEFF	**88%**	Percent		Air Side TD	24.60	
CFMREF	**2,500**	CFM		Supply HP	3	
DREFF	**97%**	Percent	(@F.L.)	T.S.P.	3.5	
MINVOL	**1,000**	CFM	CFM	Supply Fan Eff	65%	
Conv. Fact.	6,344	60	0.24	Return CFM	2,125	
Off Coil Conditions	57	24.18	28	Return T.S.P.	1.5	
Btu/CCF	102,800	Heat EX Eff Wtr:		Return Fan HP	0.5	
kW/Ton	0.65	Heat EX Eff Smr:		Return Fan Eff	60%	

Proposed Operation

Bin DB temp/ WetBulb	Average Temp	enthapy OA btu/lb	enthapy Mixed Air btu/lb	Bin hrs	SA air flow CFM	Fan kW	Fan kWh	OA air flow CFM	Discharge Air Temp	MAT Air Temp	Heat Pipe Air Temp DT °F	MAT Air Temp w/ Hpipe	Space Temp setpoint	Total Cooling BTU/Hr	Total Cooling kWh/year	Total Cooling Demand Tons	Total Heating BTU/Hr	Total Reheat BTU/Hr	Run Fraction	Proposed Heating CCF/year
-15 -11 / -12.6	-12.5	0.0		0	2,500	1.943	-	375	75.0°	59.3°	0.0°	59.3°	72°				42,323		100%	-
-10 -6 / -7.1	-7.5	0.0		0	2,500	1.943	-	375	75.0°	60.1°	0.0°	60.1°	72°				40,298		100%	-
-5 -1 / -2.9	-2.5	0.0		0	2,500	1.943	-	375	75.0°	60.8°	0.0°	60.8°	72°				38,273		100%	-
0-4/1	2.5	0.0		2	2,500	1.943	4	375	75.0°	61.6°	0.0°	61.6°	72°				36,248		39%	0.35
5-9/6	7.5	2.9		5	2,500	1.943	10	375	74.0°	62.3°	0.0°	62.3°	72°				31,523		36%	0.72
10-14/11	12.5	4.2		77	2,500	1.943	150	375	73.0°	63.1°	0.0°	63.1°	72°				26,798		34%	8.81
15-19/15	17.5	5.7		270	2,500	1.943	525	375	72.0°	63.8°	0.0°	63.8°	72°				22,073		32%	23.86
20-24/20	22.5	7.3		452	2,500	1.943	878	375	72.0°	64.6°	0.0°	64.6°	72°				20,048		30%	33.84
25-29/25	27.5	9.0		411	2,500	1.943	798	375	72.0°	65.3°	0.0°	65.3°	72°				18,023		28%	25.67
30-34/30	32.5	11.1		897	2,500	1.943	1,743	375	72.0°	66.1°	0.0°	66.1°	72°				15,998		26%	45.88
35-39/34	37.5	12.8		808	2,500	1.943	1,570	375	72.0°	66.8°	0.0°	66.8°	72°				13,973		23%	33.06
40-44/38	42.5	15.1		722	2,500	1.943	1,403	375	72.0°	67.6°	0.0°	67.6°	72°				11,948		21%	22.94
45-49/42	47.5	17.0		512	2,500	1.943	995	375	72.0°	68.3°	0.0°	68.3°	72°				9,922		35%	22.18
50-54/47	52.5	19.7	25.8	659	2,500	1.943	1,280	375	56.7°	69.1°	0.0°	69.1°	72°	33,413	454	2.78	-		38%	
55-59/52	57.5	22.9	26.0	829	2,500	1.943	1,611	375	56.7°	69.8°	0.0°	69.8°	72°	35,438	643	2.95	-		40%	
60-64/56	62.5	25.7	26.2	1010	2,500	1.943	1,962	375	56.7°	70.6°	0.0°	70.6°	72°	37,463	875	3.12	-		43%	
65-69/60	67.5	28.7	26.4	812	2,500	1.943	1,577	375	56.7°	71.3°	0.0°	71.3°	72°	39,488	782	3.29			45%	
70-74/63	72.5	31.0	26.6	470	2,500	1.943	913	375	56.7°	72.1°	0.0°	72.1°	72°	41,513	500	3.46			47%	
75-79/66	77.5	32.4	26.8	436	2,500	1.943	847	375	56.7°	72.8°	0.0°	72.8°	72°	43,538	510	3.63			50%	
80-84/69	82.5	33.8	26.9	265	2,500	1.943	515	375	56.7°	73.6°	0.0°	73.6°	72°	45,563	340	3.80			52%	
85-89/72	87.5	36.5	27.1	106	2,500	1.943	206	375	56.7°	74.3°	0.0°	74.3°	72°	47,588	148	3.97			54%	
90-94/73	92.5	39.2	27.3	17	2,500	1.943	33	375	56.7°	75.1°	0.0°	75.1°	72°	49,613	26	4.13			57%	
				8,760.00			17,018								4,277	4.13				217

Title	**Control Upgrades**
ECM#	**7**
Project:	**SCI Houtzdale**
Site:	**SCI Houtzdale**
Unit #:	**AHU-5**

CONVERSION FACTORS				Design Conditions		
SLR	**87%**	Sensible	/latent	Supply CFM	10,500	
FANHP (F.L.)	**8.28**	HP@	10,500	Total Cooling	260,250	328,000
RAFHP (F.L.)	**-**	HP@	8,925	Sensible Cooling	225,666	
FMEFF	**90%**	Percent		Air Side TD	19.90	
CFMREF	**10,500**	CFM		Supply HP	10	
DREFF	**97%**	Percent	(@F.L.)	T.S.P.	3.0	
MINVOL	**4,200**	CFM	CFM	Supply Fan Eff	60%	
Conv. Fact.	6,344	60	0.24	Return CFM	8,925	
Off Coil Conditions	61	26.07	28	Return T.S.P.	-	
Btu/CCF	102,800	Heat EX Eff Wtr:		Return Fan HP		
kW/Ton	0.65	Heat EX Eff Smr:		Return Fan Eff	60%	

Existing Operation

Bin DB temp/ WetBulb	Average Temp	enthapy OA btu/lb	enthapy Mixed Air btu/lb	Bin hrs	SA air flow CFM	Fan kW	Fan kWh	OA air flow CFM	Discharge Air Temp	MAT Air Temp	Heat Pipe Air Temp DT °F	MAT Air Temp w/ Hpipe	Space Temp setpoint	Total Cooling BTU/Hr	Total Cooling kWh/year	Total Cooling Demand Tons	Total Heating BTU/Hr	Total Reheat BTU/Hr	Run Fraction	Existing Heating CCF/year
-15 -11 / -12.6	-12.5	0.0		0	10,500	6.898	-	1,575	75.0°	59.3°	0.0°	59.3°	72°				177,755		100%	-
-10 -6 / -7.1	-7.5	0.0		0	10,500	6.898	-	1,575	75.0°	60.1°	0.0°	60.1°	72°				169,250		100%	-
-5 -1 / -2.9	-2.5	0.0		0	10,500	6.898	-	1,575	75.0°	60.8°	0.0°	60.8°	72°				160,745		100%	-
0-4/1	2.5	0.0		2	10,500	6.898	14	1,575	75.0°	61.6°	0.0°	61.6°	72°				152,240		46%	1.76
5-9/6	7.5	2.9		5	10,500	6.898	34	1,575	75.0°	62.3°	0.0°	62.3°	72°				143,735		44%	3.93
10-14/11	12.5	4.2		77	10,500	6.898	531	1,575	75.0°	63.1°	0.0°	63.1°	72°				135,230		41%	53.54
15-19/15	17.5	5.7		270	10,500	6.898	1,862	1,575	75.0°	63.8°	0.0°	63.8°	72°				126,725		39%	164.86
20-24/20	22.5	7.3		452	10,500	6.898	3,118	1,575	75.0°	64.6°	0.0°	64.6°	72°				118,220		36%	240.19
25-29/25	27.5	9.0		411	10,500	6.898	2,835	1,575	75.0°	65.3°	0.0°	65.3°	72°				109,715		33%	188.11
30-34/30	32.5	11.1		897	10,500	6.898	6,187	1,575	75.0°	66.1°	0.0°	66.1°	72°				101,210		31%	349.36
35-39/34	37.5	12.8		808	10,500	6.898	5,573	1,575	75.0°	66.8°	0.0°	66.8°	72°				92,705		28%	264.03
40-44/38	42.5	15.1		722	10,500	6.898	4,980	1,575	75.0°	67.6°	0.0°	67.6°	72°				84,200		26%	194.62
45-49/42	47.5	17.0		512	10,500	6.898	3,532	1,575	75.0°	68.3°	0.0°	68.3°	72°				75,695		25%	120.83
50-54/47	52.5	19.7	25.8	659	10,500	6.898	4,546	1,575	61.1°	69.1°	0.0°	69.1°	72°	90,437	1,122	7.54	-		35%	
55-59/52	57.5	22.9	26.0	829	10,500	6.898	5,718	1,575	61.1°	69.8°	0.0°	69.8°	72°	98,942	1,689	8.25	-		38%	
60-64/56	62.5	25.7	26.2	1010	10,500	6.898	6,967	1,575	61.1°	70.6°	0.0°	70.6°	72°	107,447	2,427	8.95	-		41%	
65-69/60	67.5	28.7	26.4	812	10,500	6.898	5,601	1,575	61.1°	71.3°	0.0°	71.3°	72°	115,952	2,272	9.66			45%	
70-74/63	72.5	31.0	26.6	470	10,500	6.898	3,242	1,575	61.1°	72.1°	0.0°	72.1°	72°	124,457	1,515	10.37			48%	
75-79/66	77.5	32.4	26.8	436	10,500	6.898	3,007	1,575	61.1°	72.8°	0.0°	72.8°	72°	132,962	1,604	11.08			51%	
80-84/69	82.5	33.8	26.9	265	10,500	6.898	1,828	1,575	61.1°	73.6°	0.0°	73.6°	72°	141,467	1,104	11.79			54%	
85-89/72	87.5	36.5	27.1	106	10,500	6.898	731	1,575	61.1°	74.3°	0.0°	74.3°	72°	149,972	496	12.50			58%	
90-94/73	92.5	39.2	27.3	17	10,500	6.898	117	1,575	61.1°	75.1°	0.0°	75.1°	72°	158,477	89	13.21			61%	
				8,760.00			60,425								12,318	13.21				1,581

CONVERSION FACTORS				Design Conditions		
	87%	Sensible	/latent	Supply CFM	10,500	
FANHP (F.L.)	**8.28**	HP@	10,500	Total Cooling	260,250	328,000
RAFHP (F.L.)	**-**	HP@	8,925	Sensible Cooling	225,666	
FMEFF	**90%**	Percent		Air Side TD	19.90	
CFMREF	**10,500**	CFM		Supply HP	10.00	
DREFF	**97%**	Percent	(@F.L.)	T.S.P.	3.0	
MINVOL	**4,200**	CFM	CFM	Supply Fan Eff	60%	
Conv. Fact.	6,344	60	0.24	Return CFM	8,925	
Off Coil Conditions	61	26.07	28	Return T.S.P.	-	
Ht Pmp COP	102,800	Heat EX Eff Wtr:		Return Fan HP		
kW/Ton	0.65	Heat EX Eff Smr:		Return Fan Eff	60%	

Proposed Operation

Bin DB temp/ WetBulb	Average Temp	enthapy OA btu/lb	enthapy Mixed Air btu/lb	Bin hrs	SA air flow CFM	Fan kW	Fan kWh	OA air flow CFM	Discharge Air Temp	MAT Air Temp	Heat Pipe Air Temp DT °F	MAT Air Temp w/ Hpipe	Space Temp setpoint	Total Cooling BTU/Hr	Total Cooling kWh/year	Total Cooling Demand Tons	Total Heating BTU/Hr	Total Reheat BTU/Hr	Run Fraction	Proposed Heating CCF/year
-15 -11 / -12.6	-12.5	0.0		0	10,500	6.898	-	1,575	75.0°	59.3°	0.0°	59.3°	72°				177,755		100%	-
-10 -6 / -7.1	-7.5	0.0		0	10,500	6.898	-	1,575	75.0°	60.1°	0.0°	60.1°	72°				169,250		100%	-
-5 -1 / -2.9	-2.5	0.0		0	10,500	6.898	-	1,575	75.0°	60.8°	0.0°	60.8°	72°				160,745		100%	-
0-4/1	2.5	0.0		2	10,500	6.898	14	1,575	75.0°	61.6°	0.0°	61.6°	72°				152,240		46%	1.76
5-9/6	7.5	2.9		5	10,500	6.898	34	1,575	74.0°	62.3°	0.0°	62.3°	72°				132,395		44%	3.62
10-14/11	12.5	4.2		77	10,500	6.898	531	1,575	73.0°	63.1°	0.0°	63.1°	72°				112,550		41%	44.56
15-19/15	17.5	5.7		270	10,500	6.898	1,862	1,575	72.0°	63.8°	0.0°	63.8°	72°				92,705		39%	120.60
20-24/20	22.5	7.3		452	10,500	6.898	3,118	1,575	72.0°	64.6°	0.0°	64.6°	72°				84,200		36%	171.07
25-29/25	27.5	9.0		411	10,500	6.898	2,835	1,575	72.0°	65.3°	0.0°	65.3°	72°				75,695		33%	129.78
30-34/30	32.5	11.1		897	10,500	6.898	6,187	1,575	72.0°	66.1°	0.0°	66.1°	72°				67,190		31%	231.93
35-39/34	37.5	12.8		808	10,500	6.898	5,573	1,575	72.0°	66.8°	0.0°	66.8°	72°				58,685		28%	167.14
40-44/38	42.5	15.1		722	10,500	6.898	4,980	1,575	72.0°	67.6°	0.0°	67.6°	72°				50,180		26%	115.99
45-49/42	47.5	17.0		512	10,500	6.898	3,532	1,575	72.0°	68.3°	0.0°	68.3°	72°				41,675		25%	66.53
50-54/47	52.5	19.7	25.8	659	10,500	6.898	4,546	1,575	61.1°	69.1°	0.0°	69.1°	72°	90,437	1,122	7.54	-		35%	
55-59/52	57.5	22.9	26.0	829	10,500	6.898	5,718	1,575	61.1°	69.8°	0.0°	69.8°	72°	98,942	1,689	8.25	-		38%	
60-64/56	62.5	25.7	26.2	1010	10,500	6.898	6,967	1,575	61.1°	70.6°	0.0°	70.6°	72°	107,447	2,427	8.95	-		41%	
65-69/60	67.5	28.7	26.4	812	10,500	6.898	5,601	1,575	61.1°	71.3°	0.0°	71.3°	72°	115,952	2,272	9.66			45%	
70-74/63	72.5	31.0	26.6	470	10,500	6.898	3,242	1,575	61.1°	72.1°	0.0°	72.1°	72°	124,457	1,515	10.37			48%	
75-79/66	77.5	32.4	26.8	436	10,500	6.898	3,007	1,575	61.1°	72.8°	0.0°	72.8°	72°	132,962	1,604	11.08			51%	
80-84/69	82.5	33.8	26.9	265	10,500	6.898	1,828	1,575	61.1°	73.6°	0.0°	73.6°	72°	141,467	1,104	11.79			54%	
85-89/72	87.5	36.5	27.1	106	10,500	6.898	731	1,575	61.1°	74.3°	0.0°	74.3°	72°	149,972	496	12.50			58%	
90-94/73	92.5	39.2	27.3	17	10,500	6.898	117	1,575	61.1°	75.1°	0.0°	75.1°	72°	158,477	89	13.21			61%	
				8,760.00			60,425								12,318	13.21				1,053

Title	**Control Upgrades**
ECM#	**7**
Project:	**SCI Houtzdale**
Site:	**SCI Houtzdale**
Unit #:	**AHU-6**

CONVERSION FACTORS				Design Conditions		
SLR	**93%**	Sensible	/latent	Supply CFM	10,500	
FANHP (F.L.)	**8.14**	HP@	10,500	Total Cooling	243,750	326,000
RAFHP (F.L.)	**-**	HP@	8,925	Sensible Cooling	226,800	
FMEFF	**90%**	Percent		Air Side TD	20.00	
CFMREF	**10,500**	CFM		Supply HP	10	
DREFF	**97%**	Percent	(@F.L.)	T.S.P.	3.0	
MINVOL	**4,200**	CFM	CFM	Supply Fan Eff	60%	
Conv. Fact.	6,344	60	0.24	Return CFM	8,925	
Off Coil Conditions	61	26.34	28	Return T.S.P.	-	
Btu/CCF	102,800	Heat EX Eff Wtr:		Return Fan HP		
kW/Ton	0.65	Heat EX Eff Smr:		Return Fan Eff	60%	

Existing Operation

Bin DB temp/ WetBulb	Average Temp	enthapy OA btu/lb	enthapy Mixed Air btu/lb	Bin hrs	SA air flow CFM	Fan kW	Fan kWh	OA air flow CFM	Discharge Air Temp	MAT Air Temp	Heat Pipe Air Temp DT °F	MAT Air Temp w/ Hpipe	Space Temp setpoint	Total Cooling BTU/Hr	Total Cooling kWh/year	Total Cooling Demand Tons	Total Heating BTU/Hr	Total Reheat BTU/Hr	Run Fraction	Existing Heating CCF/year
-15 -11 / -12.6	-12.5	0.0		0	10,500	6.783	-	1,575	75.0°	59.3°	0.0°	59.3°	72°				177,755		100%	-
-10 -6 / -7.1	-7.5	0.0		0	10,500	6.783	-	1,575	75.0°	60.1°	0.0°	60.1°	72°				169,250		100%	-
-5 -1 / -2.9	-2.5	0.0		0	10,500	6.783	-	1,575	75.0°	60.8°	0.0°	60.8°	72°				160,745		100%	-
0-4/1	2.5	0.0		2	10,500	6.783	14	1,575	75.0°	61.6°	0.0°	61.6°	72°				152,240		47%	1.77
5-9/6	7.5	2.9		5	10,500	6.783	34	1,575	75.0°	62.3°	0.0°	62.3°	72°				143,735		44%	3.95
10-14/11	12.5	4.2		77	10,500	6.783	522	1,575	75.0°	63.1°	0.0°	63.1°	72°				135,230		41%	53.87
15-19/15	17.5	5.7		270	10,500	6.783	1,831	1,575	75.0°	63.8°	0.0°	63.8°	72°				126,725		39%	165.87
20-24/20	22.5	7.3		452	10,500	6.783	3,066	1,575	75.0°	64.6°	0.0°	64.6°	72°				118,220		36%	241.66
25-29/25	27.5	9.0		411	10,500	6.783	2,788	1,575	75.0°	65.3°	0.0°	65.3°	72°				109,715		34%	189.26
30-34/30	32.5	11.1		897	10,500	6.783	6,084	1,575	75.0°	66.1°	0.0°	66.1°	72°				101,210		31%	351.50
35-39/34	37.5	12.8		808	10,500	6.783	5,481	1,575	75.0°	66.8°	0.0°	66.8°	72°				92,705		28%	265.65
40-44/38	42.5	15.1		722	10,500	6.783	4,897	1,575	75.0°	67.6°	0.0°	67.6°	72°				84,200		26%	195.82
45-49/42	47.5	17.0		512	10,500	6.783	3,473	1,575	75.0°	68.3°	0.0°	68.3°	72°				75,695		40%	193.33
50-54/47	52.5	19.7	25.8	659	10,500	6.783	4,470	1,575	61.0°	69.1°	0.0°	69.1°	72°	91,571	1,228	7.63	-		38%	
55-59/52	57.5	22.9	26.0	829	10,500	6.783	5,623	1,575	61.0°	69.8°	0.0°	69.8°	72°	100,076	1,845	8.34	-		41%	
60-64/56	62.5	25.7	26.2	1010	10,500	6.783	6,851	1,575	61.0°	70.6°	0.0°	70.6°	72°	108,581	2,646	9.05	-		45%	
65-69/60	67.5	28.7	26.4	812	10,500	6.783	5,508	1,575	61.0°	71.3°	0.0°	71.3°	72°	117,086	2,474	9.76			48%	
70-74/63	72.5	31.0	26.6	470	10,500	6.783	3,188	1,575	61.0°	72.1°	0.0°	72.1°	72°	125,591	1,647	10.47			52%	
75-79/66	77.5	32.4	26.8	436	10,500	6.783	2,957	1,575	61.0°	72.8°	0.0°	72.8°	72°	134,096	1,742	11.17			55%	
80-84/69	82.5	33.8	26.9	265	10,500	6.783	1,797	1,575	61.0°	73.6°	0.0°	73.6°	72°	142,601	1,197	11.88			59%	
85-89/72	87.5	36.5	27.1	106	10,500	6.783	719	1,575	61.0°	74.3°	0.0°	74.3°	72°	151,106	538	12.59			62%	
90-94/73	92.5	39.2	27.3	17	10,500	6.783	115	1,575	61.0°	75.1°	0.0°	75.1°	72°	159,611	96	13.30			65%	
				8,760.00			59,418								13,414	13.30				1,663

CONVERSION FACTORS				Design Conditions		
	93%	Sensible	/latent	Supply CFM	10,500	
FANHP (F.L.)	**8.14**	HP@	10,500	Total Cooling	243,750	326,000
RAFHP (F.L.)	**-**	HP@	8,925	Sensible Cooling	226,800	
FMEFF	**90%**	Percent		Air Side TD	20.00	
CFMREF	**10,500**	CFM		Supply HP	10	
DREFF	**97%**	Percent	(@F.L.)	T.S.P.	3.0	
MINVOL	**4,200**	CFM	CFM	Supply Fan Eff	60%	
Conv. Fact.	6,344	60	0.24	Return CFM	8,925	
Off Coil Conditions	61	26.34	28	Return T.S.P.	-	
Ht Pmp COP	102,800	Heat EX Eff Wtr:		Return Fan HP		
kW/Ton	0.65	Heat EX Eff Smr:		Return Fan Eff	60%	

Bin DB temp/ WetBulb	Average Temp	enthapy OA btu/lb	enthapy Mixed Air btu/lb	Bin hrs	SA air flow CFM	Fan kW	Fan kWh	OA air flow CFM	Discharge Air Temp	MAT Air Temp	Heat Pipe Air Temp DT °F	MAT Air Temp w/ Hpipe	Space Temp setpoint	Total Cooling BTU/Hr	Total Cooling kWh/year	Total Cooling Demand Tons	Total Heating BTU/Hr	Total Reheat BTU/Hr	Run Fraction	Proposed Heating CCF/year
-15 -11 / -12.6	-12.5	0.0		0	10,500	6.783	-	1,575	75.0°	59.3°	0.0°	59.3°	72°				177,755		100%	-
-10 -6 / -7.1	-7.5	0.0		0	10,500	6.783	-	1,575	75.0°	60.1°	0.0°	60.1°	72°				169,250		100%	-
-5 -1 / -2.9	-2.5	0.0		0	10,500	6.783	-	1,575	75.0°	60.8°	0.0°	60.8°	72°				160,745		100%	-
0-4/1	2.5	0.0		2	10,500	6.783	14	1,575	75.0°	61.6°	0.0°	61.6°	72°				152,240		47%	1.77
5-9/6	7.5	2.9		5	10,500	6.783	34	1,575	74.0°	62.3°	0.0°	62.3°	72°				132,395		44%	3.64
10-14/11	12.5	4.2		77	10,500	6.783	522	1,575	73.0°	63.1°	0.0°	63.1°	72°				112,550		41%	44.83
15-19/15	17.5	5.7		270	10,500	6.783	1,831	1,575	72.0°	63.8°	0.0°	63.8°	72°				92,705		39%	121.34
20-24/20	22.5	7.3		452	10,500	6.783	3,066	1,575	72.0°	64.6°	0.0°	64.6°	72°				84,200		36%	172.12
25-29/25	27.5	9.0		411	10,500	6.783	2,788	1,575	72.0°	65.3°	0.0°	65.3°	72°				75,695		34%	130.58
30-34/30	32.5	11.1		897	10,500	6.783	6,084	1,575	72.0°	66.1°	0.0°	66.1°	72°				67,190		31%	233.35
35-39/34	37.5	12.8		808	10,500	6.783	5,481	1,575	72.0°	66.8°	0.0°	66.8°	72°				58,685		28%	168.16
40-44/38	42.5	15.1		722	10,500	6.783	4,897	1,575	72.0°	67.6°	0.0°	67.6°	72°				50,180		26%	116.70
45-49/42	47.5	17.0		512	10,500	6.783	3,473	1,575	72.0°	68.3°	0.0°	68.3°	72°				41,675		40%	106.44
50-54/47	52.5	19.7	25.8	659	10,500	6.783	4,470	1,575	61.0°	69.1°	0.0°	69.1°	72°	91,571	1,228	7.63	-		38%	
55-59/52	57.5	22.9	26.0	829	10,500	6.783	5,623	1,575	61.0°	69.8°	0.0°	69.8°	72°	100,076	1,845	8.34	-		41%	
60-64/56	62.5	25.7	26.2	1010	10,500	6.783	6,851	1,575	61.0°	70.6°	0.0°	70.6°	72°	108,581	2,646	9.05	-		45%	
65-69/60	67.5	28.7	26.4	812	10,500	6.783	5,508	1,575	61.0°	71.3°	0.0°	71.3°	72°	117,086	2,474	9.76			48%	
70-74/63	72.5	31.0	26.6	470	10,500	6.783	3,188	1,575	61.0°	72.1°	0.0°	72.1°	72°	125,591	1,647	10.47			52%	
75-79/66	77.5	32.4	26.8	436	10,500	6.783	2,957	1,575	61.0°	72.8°	0.0°	72.8°	72°	134,096	1,742	11.17			55%	
80-84/69	82.5	33.8	26.9	265	10,500	6.783	1,797	1,575	61.0°	73.6°	0.0°	73.6°	72°	142,601	1,197	11.88			59%	
85-89/72	87.5	36.5	27.1	106	10,500	6.783	719	1,575	61.0°	74.3°	0.0°	74.3°	72°	151,106	538	12.59			62%	
90-94/73	92.5	39.2	27.3	17	10,500	6.783	115	1,575	61.0°	75.1°	0.0°	75.1°	72°	159,611	96	13.30			65%	
				8,760.00			59,418								13,414	13.30				1,099

AHU-6 C Block

Title	**Control Upgrades**
ECM#	**7**
Project:	**SCI Houtzdale**
Site:	**SCI Houtzdale**
Unit #:	**AHU-7**

CONVERSION FACTORS				Design Conditions		
SLR	**76%**	Sensible	/latent	Supply CFM	2,500	
FANHP (F.L.)	**1.97**	HP@	2,500	Total Cooling	87,750	90,000
RAFHP (F.L.)	**0.15**	HP@	2,125	Sensible Cooling	66,420	
FMEFF	**88%**	Percent		Air Side TD	24.60	
CFMREF	**2,500**	CFM		Supply HP	3	
DREFF	**97%**	Percent	(@F.L.)	T.S.P.	3.0	
MINVOL	**1,000**	CFM	CFM	Supply Fan Eff	60%	
Conv. Fact.	6,344	60	0.24	Return CFM	2,125	
Off Coil Conditions	57	24.18	28	Return T.S.P.	1.5	
Btu/CCF	102,800	Heat EX Eff Wtr:		Return Fan HP	0.5	
kW/Ton	0.65	Heat EX Eff Smr:		Return Fan Eff	60%	

Existing Operation

Bin DB temp/ WetBulb	Average Temp	enthapy OA btu/lb	enthapy Mixed Air btu/lb	Bin hrs	SA air flow CFM	Fan kW	Fan kWh	OA air flow CFM	Discharge Air Temp	MAT Air Temp	Heat Pipe Air Temp DT °F	MAT Air Temp w/ Hpipe	Space Temp setpoint	Total Cooling BTU/Hr	Total Cooling kWh/year	Total Cooling Demand Tons	Total Heating BTU/Hr	Total Reheat BTU/Hr	Run Fraction	Existing Heating CCF/year
-15 -11 / -12.6	-12.5	0.0		0	2,500	1.814	-	375	75.0°	59.3°	0.0°	59.3°	72°				42,323		100%	-
-10 -6 / -7.1	-7.5	0.0		0	2,500	1.814	-	375	75.0°	60.1°	0.0°	60.1°	72°				40,298		100%	-
-5 -1 / -2.9	-2.5	0.0		0	2,500	1.814	-	375	75.0°	60.8°	0.0°	60.8°	72°				38,273		100%	-
0-4/1	2.5	0.0		2	2,500	1.814	4	375	75.0°	61.6°	0.0°	61.6°	72°				36,248		40%	0.36
5-9/6	7.5	2.9		5	2,500	1.814	9	375	75.0°	62.3°	0.0°	62.3°	72°				34,223		38%	0.81
10-14/11	12.5	4.2		77	2,500	1.814	140	375	75.0°	63.1°	0.0°	63.1°	72°				32,198		36%	11.06
15-19/15	17.5	5.7		270	2,500	1.814	490	375	75.0°	63.8°	0.0°	63.8°	72°				30,173		34%	34.06
20-24/20	22.5	7.3		452	2,500	1.814	820	375	75.0°	64.6°	0.0°	64.6°	72°				28,148		31%	49.62
25-29/25	27.5	9.0		411	2,500	1.814	745	375	75.0°	65.3°	0.0°	65.3°	72°				26,123		29%	38.86
30-34/30	32.5	11.1		897	2,500	1.814	1,627	375	75.0°	66.1°	0.0°	66.1°	72°				24,098		27%	72.18
35-39/34	37.5	12.8		808	2,500	1.814	1,465	375	75.0°	66.8°	0.0°	66.8°	72°				22,073		25%	54.55
40-44/38	42.5	15.1		722	2,500	1.814	1,309	375	75.0°	67.6°	0.0°	67.6°	72°				20,048		22%	40.21
45-49/42	47.5	17.0		512	2,500	1.814	929	375	75.0°	68.3°	0.0°	68.3°	72°				18,023		45%	51.79
50-54/47	52.5	19.7	25.8	659	2,500	1.814	1,195	375	56.7°	69.1°	0.0°	69.1°	72°	33,413	454	2.78	-		38%	
55-59/52	57.5	22.9	26.0	829	2,500	1.814	1,503	375	56.7°	69.8°	0.0°	69.8°	72°	35,438	643	2.95	-		40%	
60-64/56	62.5	25.7	26.2	1010	2,500	1.814	1,832	375	56.7°	70.6°	0.0°	70.6°	72°	37,463	875	3.12	-		43%	
65-69/60	67.5	28.7	26.4	812	2,500	1.814	1,473	375	56.7°	71.3°	0.0°	71.3°	72°	39,488	782	3.29			45%	
70-74/63	72.5	31.0	26.6	470	2,500	1.814	852	375	56.7°	72.1°	0.0°	72.1°	72°	41,513	500	3.46			47%	
75-79/66	77.5	32.4	26.8	436	2,500	1.814	791	375	56.7°	72.8°	0.0°	72.8°	72°	43,538	510	3.63			50%	
80-84/69	82.5	33.8	26.9	265	2,500	1.814	481	375	56.7°	73.6°	0.0°	73.6°	72°	45,563	340	3.80			52%	
85-89/72	87.5	36.5	27.1	106	2,500	1.814	192	375	56.7°	74.3°	0.0°	74.3°	72°	47,588	148	3.97			54%	
90-94/73	92.5	39.2	27.3	17	2,500	1.814	31	375	56.7°	75.1°	0.0°	75.1°	72°	49,613	26	4.13			57%	
				8,760.00			15,886								4,277	4.13				354

CONVERSION FACTORS				Design Conditions		
	76%	Sensible	/latent	Supply CFM	2,500	
FANHP (F.L.)	**1.97**	HP@	2,500	Total Cooling	87,750	90,000
RAFHP (F.L.)	**0.15**	HP@	2,125	Sensible Cooling	66,420	
FMEFF	**88%**	Percent		Air Side TD	24.60	
CFMREF	**2,500**	CFM		Supply HP	3.00	
DREFF	**97%**	Percent	(@F.L.)	T.S.P.	3.0	
MINVOL	**1,000**	CFM	CFM	Supply Fan Eff	60%	
Conv. Fact.	6,344	60	0.24	Return CFM	2,125	
Off Coil Conditions	57	24.18	28	Return T.S.P.	1.5	
Ht Pmp COP	102,800	Heat EX Eff Wtr:		Return Fan HP	0.5	
kW/Ton	0.65	Heat EX Eff Smr:		Return Fan Eff	60%	

Proposed Operation

Bin DB temp/ WetBulb	Average Temp	enthapy OA btu/lb	enthapy Mixed Air btu/lb	Bin hrs	SA air flow CFM	Fan kW	Fan kWh	OA air flow CFM	Discharge Air Temp	MAT Air Temp	Heat Pipe Air Temp DT °F	MAT Air Temp w/ Hpipe	Space Temp setpoint	Total Cooling BTU/Hr	Total Cooling kWh/year	Total Cooling Demand Tons	Total Heating BTU/Hr	Total Reheat BTU/Hr	Run Fraction	Proposed Heating CCF/year
-15 -11 / -12.6	-12.5	0.0		0	2,500	1.814	-	375	75.0°	59.3°	0.0°	59.3°	72°				42,323		100%	-
-10 -6 / -7.1	-7.5	0.0		0	2,500	1.814	-	375	75.0°	60.1°	0.0°	60.1°	72°				40,298		100%	-
-5 -1 / -2.9	-2.5	0.0		0	2,500	1.814	-	375	75.0°	60.8°	0.0°	60.8°	72°				38,273		100%	-
0-4/1	2.5	0.0		2	2,500	1.814	4	375	75.0°	61.6°	0.0°	61.6°	72°				36,248		40%	0.36
5-9/6	7.5	2.9		5	2,500	1.814	9	375	74.0°	62.3°	0.0°	62.3°	72°				31,523		38%	0.75
10-14/11	12.5	4.2		77	2,500	1.814	140	375	73.0°	63.1°	0.0°	63.1°	72°				26,798		36%	9.21
15-19/15	17.5	5.7		270	2,500	1.814	490	375	72.0°	63.8°	0.0°	63.8°	72°				22,073		34%	24.92
20-24/20	22.5	7.3		452	2,500	1.814	820	375	72.0°	64.6°	0.0°	64.6°	72°				20,048		31%	35.34
25-29/25	27.5	9.0		411	2,500	1.814	745	375	72.0°	65.3°	0.0°	65.3°	72°				18,023		29%	26.81
30-34/30	32.5	11.1		897	2,500	1.814	1,627	375	72.0°	66.1°	0.0°	66.1°	72°				15,998		27%	47.92
35-39/34	37.5	12.8		808	2,500	1.814	1,465	375	72.0°	66.8°	0.0°	66.8°	72°				13,973		25%	34.53
40-44/38	42.5	15.1		722	2,500	1.814	1,309	375	72.0°	67.6°	0.0°	67.6°	72°				11,948		22%	23.96
45-49/42	47.5	17.0		512	2,500	1.814	929	375	72.0°	68.3°	0.0°	68.3°	72°				9,922		45%	28.51
50-54/47	52.5	19.7	25.8	659	2,500	1.814	1,195	375	56.7°	69.1°	0.0°	69.1°	72°	33,413	454	2.78	-		38%	
55-59/52	57.5	22.9	26.0	829	2,500	1.814	1,503	375	56.7°	69.8°	0.0°	69.8°	72°	35,438	643	2.95	-		40%	
60-64/56	62.5	25.7	26.2	1010	2,500	1.814	1,832	375	56.7°	70.6°	0.0°	70.6°	72°	37,463	875	3.12	-		43%	
65-69/60	67.5	28.7	26.4	812	2,500	1.814	1,473	375	56.7°	71.3°	0.0°	71.3°	72°	39,488	782	3.29			45%	
70-74/63	72.5	31.0	26.6	470	2,500	1.814	852	375	56.7°	72.1°	0.0°	72.1°	72°	41,513	500	3.46			47%	
75-79/66	77.5	32.4	26.8	436	2,500	1.814	791	375	56.7°	72.8°	0.0°	72.8°	72°	43,538	510	3.63			50%	
80-84/69	82.5	33.8	26.9	265	2,500	1.814	481	375	56.7°	73.6°	0.0°	73.6°	72°	45,563	340	3.80			52%	
85-89/72	87.5	36.5	27.1	106	2,500	1.814	192	375	56.7°	74.3°	0.0°	74.3°	72°	47,588	148	3.97			54%	
90-94/73	92.5	39.2	27.3	17	2,500	1.814	31	375	56.7°	75.1°	0.0°	75.1°	72°	49,613	26	4.13			57%	
				8,760.00			15,886								4,277	4.13				232

Title	**Control Upgrades**
ECM#	**7**
Project:	**SCI Houtzdale**
Site:	**SCI Houtzdale**
Unit #:	**AHU-8**

CONVERSION FACTORS				Design Conditions		
SLR	**87%**	Sensible	/latent	Supply CFM	10,500	
FANHP (F.L.)	**8.28**	HP@	10,500	Total Cooling	260,250	294,000
RAFHP (F.L.)	**-**	HP@	8,925	Sensible Cooling	225,666	
FMEFF	**90%**	Percent		Air Side TD	19.90	
CFMREF	**10,500**	CFM		Supply HP	10	
DREFF	**97%**	Percent	(@F.L.)	T.S.P.	3.0	
MINVOL	**4,200**	CFM	CFM	Supply Fan Eff	60%	
Conv. Fact.	6,344	60	0.24	Return CFM	8,925	
Off Coil Conditions	61	26.07	28	Return T.S.P.	-	
Btu/CCF	102,800	Heat EX Eff Wtr:		Return Fan HP		
kW/Ton	0.65	Heat EX Eff Smr:		Return Fan Eff	65%	

Existing Operation

Bin DB temp/ WetBulb	Average Temp	enthapy OA btu/lb	enthapy Mixed Air btu/lb	Bin hrs	SA air flow CFM	Fan kW	Fan kWh	OA air flow CFM	Discharge Air Temp	MAT Air Temp	Heat Pipe Air Temp DT °F	MAT Air Temp w/ Hpipe	Space Temp setpoint	Total Cooling BTU/Hr	Total Cooling kWh/year	Total Cooling Demand Tons	Total Heating BTU/Hr	Total Reheat BTU/Hr	Run Fraction	Existing Heating CCF/year
-15 -11 / -12.6	-12.5	0.0		0	10,500	6.898	-	1,575	75.0°	59.3°	0.0°	59.3°	72°				177,755		100%	-
-10 -6 / -7.1	-7.5	0.0		0	10,500	6.898	-	1,575	75.0°	60.1°	0.0°	60.1°	72°				169,250		100%	-
-5 -1 / -2.9	-2.5	0.0		0	10,500	6.898	-	1,575	75.0°	60.8°	0.0°	60.8°	72°				160,745		100%	-
0-4/1	2.5	0.0		2	10,500	6.898	14	1,575	75.0°	61.6°	0.0°	61.6°	72°				152,240		52%	1.97
5-9/6	7.5	2.9		5	10,500	6.898	34	1,575	75.0°	62.3°	0.0°	62.3°	72°				143,735		49%	4.38
10-14/11	12.5	4.2		77	10,500	6.898	531	1,575	75.0°	63.1°	0.0°	63.1°	72°				135,230		46%	59.73
15-19/15	17.5	5.7		270	10,500	6.898	1,862	1,575	75.0°	63.8°	0.0°	63.8°	72°				126,725		43%	183.93
20-24/20	22.5	7.3		452	10,500	6.898	3,118	1,575	75.0°	64.6°	0.0°	64.6°	72°				118,220		40%	267.97
25-29/25	27.5	9.0		411	10,500	6.898	2,835	1,575	75.0°	65.3°	0.0°	65.3°	72°				109,715		37%	209.86
30-34/30	32.5	11.1		897	10,500	6.898	6,187	1,575	75.0°	66.1°	0.0°	66.1°	72°				101,210		34%	389.76
35-39/34	37.5	12.8		808	10,500	6.898	5,573	1,575	75.0°	66.8°	0.0°	66.8°	72°				92,705		32%	294.56
40-44/38	42.5	15.1		722	10,500	6.898	4,980	1,575	75.0°	67.6°	0.0°	67.6°	72°				84,200		29%	217.13
45-49/42	47.5	17.0		512	10,500	6.898	3,532	1,575	75.0°	68.3°	0.0°	68.3°	72°				75,695		50%	241.67
50-54/47	52.5	19.7	25.8	659	10,500	6.898	4,546	1,575	61.1°	69.1°	0.0°	69.1°	72°	90,437	1,122	7.54	-		35%	
55-59/52	57.5	22.9	26.0	829	10,500	6.898	5,718	1,575	61.1°	69.8°	0.0°	69.8°	72°	98,942	1,689	8.25	-		38%	
60-64/56	62.5	25.7	26.2	1010	10,500	6.898	6,967	1,575	61.1°	70.6°	0.0°	70.6°	72°	107,447	2,427	8.95	-		41%	
65-69/60	67.5	28.7	26.4	812	10,500	6.898	5,601	1,575	61.1°	71.3°	0.0°	71.3°	72°	115,952	2,272	9.66			45%	
70-74/63	72.5	31.0	26.6	470	10,500	6.898	3,242	1,575	61.1°	72.1°	0.0°	72.1°	72°	124,457	1,515	10.37			48%	
75-79/66	77.5	32.4	26.8	436	10,500	6.898	3,007	1,575	61.1°	72.8°	0.0°	72.8°	72°	132,962	1,604	11.08			51%	
80-84/69	82.5	33.8	26.9	265	10,500	6.898	1,828	1,575	61.1°	73.6°	0.0°	73.6°	72°	141,467	1,104	11.79			54%	
85-89/72	87.5	36.5	27.1	106	10,500	6.898	731	1,575	61.1°	74.3°	0.0°	74.3°	72°	149,972	496	12.50			58%	
90-94/73	92.5	39.2	27.3	17	10,500	6.898	117	1,575	61.1°	75.1°	0.0°	75.1°	72°	158,477	89	13.21			61%	
				8,760.00			60,425								12,318	13.21				1,871

CONVERSION FACTORS				Design Conditions		
	87%	Sensible	/latent	Supply CFM	10,500	
FANHP (F.L.)	**8.28**	HP@	10,500	Total Cooling	260,250	294,000
RAFHP (F.L.)	**-**	HP@	8,925	Sensible Cooling	225,666	
FMEFF	**90%**	Percent		Air Side TD	19.90	
CFMREF	**10,500**	CFM		Supply HP	10.00	
DREFF	**97%**	Percent	(@F.L.)	T.S.P.	3.0	
MINVOL	**4,200**	CFM	CFM	Supply Fan Eff	60%	
Conv. Fact.	6,344	60	0.24	Return CFM	8,925	
Off Coil Conditions	61	26.07	28	Return T.S.P.	-	
Btu/CCF	102,800	Heat EX Eff Wtr:		Return Fan HP		
kW/Ton	0.65	Heat EX Eff Smr:		Return Fan Eff	65%	

Proposed Operation

Bin DB temp/ WetBulb	Average Temp	enthapy OA btu/lb	enthapy Mixed Air btu/lb	Bin hrs	SA air flow CFM	Fan kW	Fan kWh	OA air flow CFM	Discharge Air Temp	MAT Air Temp	Heat Pipe Air Temp DT °F	MAT Air Temp w/ Hpipe	Space Temp setpoint	Total Cooling BTU/Hr	Total Cooling kWh/year	Total Cooling Demand Tons	Total Heating BTU/Hr	Total Reheat BTU/Hr	Run Fraction	Proposed Heating CCF/year
-15 -11 / -12.6	-12.5	0.0		0	10,500	6.898	-	1,575	75.0°	59.3°	0.0°	59.3°	72°				177,755		100%	-
-10 -6 / -7.1	-7.5	0.0		0	10,500	6.898	-	1,575	75.0°	60.1°	0.0°	60.1°	72°				169,250		100%	-
-5 -1 / -2.9	-2.5	0.0		0	10,500	6.898	-	1,575	75.0°	60.8°	0.0°	60.8°	72°				160,745		100%	-
0-4/1	2.5	0.0		2	10,500	6.898	14	1,575	75.0°	61.6°	0.0°	61.6°	72°				152,240		52%	1.97
5-9/6	7.5	2.9		5	10,500	6.898	34	1,575	74.0°	62.3°	0.0°	62.3°	72°				132,395		49%	4.04
10-14/11	12.5	4.2		77	10,500	6.898	531	1,575	73.0°	63.1°	0.0°	63.1°	72°				112,550		46%	49.71
15-19/15	17.5	5.7		270	10,500	6.898	1,862	1,575	72.0°	63.8°	0.0°	63.8°	72°				92,705		43%	134.55
20-24/20	22.5	7.3		452	10,500	6.898	3,118	1,575	72.0°	64.6°	0.0°	64.6°	72°				84,200		40%	190.85
25-29/25	27.5	9.0		411	10,500	6.898	2,835	1,575	72.0°	65.3°	0.0°	65.3°	72°				75,695		37%	144.79
30-34/30	32.5	11.1		897	10,500	6.898	6,187	1,575	72.0°	66.1°	0.0°	66.1°	72°				67,190		34%	258.75
35-39/34	37.5	12.8		808	10,500	6.898	5,573	1,575	72.0°	66.8°	0.0°	66.8°	72°				58,685		32%	186.47
40-44/38	42.5	15.1		722	10,500	6.898	4,980	1,575	72.0°	67.6°	0.0°	67.6°	72°				50,180		29%	129.40
45-49/42	47.5	17.0		512	10,500	6.898	3,532	1,575	72.0°	68.3°	0.0°	68.3°	72°				41,675		50%	133.05
50-54/47	52.5	19.7	25.8	659	10,500	6.898	4,546	1,575	61.1°	69.1°	0.0°	69.1°	72°	90,437	1,122	7.54	-		35%	
55-59/52	57.5	22.9	26.0	829	10,500	6.898	5,718	1,575	61.1°	69.8°	0.0°	69.8°	72°	98,942	1,689	8.25	-		38%	
60-64/56	62.5	25.7	26.2	1010	10,500	6.898	6,967	1,575	61.1°	70.6°	0.0°	70.6°	72°	107,447	2,427	8.95	-		41%	
65-69/60	67.5	28.7	26.4	812	10,500	6.898	5,601	1,575	61.1°	71.3°	0.0°	71.3°	72°	115,952	2,272	9.66			45%	
70-74/63	72.5	31.0	26.6	470	10,500	6.898	3,242	1,575	61.1°	72.1°	0.0°	72.1°	72°	124,457	1,515	10.37			48%	
75-79/66	77.5	32.4	26.8	436	10,500	6.898	3,007	1,575	61.1°	72.8°	0.0°	72.8°	72°	132,962	1,604	11.08			51%	
80-84/69	82.5	33.8	26.9	265	10,500	6.898	1,828	1,575	61.1°	73.6°	0.0°	73.6°	72°	141,467	1,104	11.79			54%	
85-89/72	87.5	36.5	27.1	106	10,500	6.898	731	1,575	61.1°	74.3°	0.0°	74.3°	72°	149,972	496	12.50			58%	
90-94/73	92.5	39.2	27.3	17	10,500	6.898	117	1,575	61.1°	75.1°	0.0°	75.1°	72°	158,477	89	13.21			61%	
				8,760.00			60,425								12,318	13.21				1,234

Title	**Control Upgrades**
ECM#	**7**
Project:	**SCI Houtzdale**
Site:	**SCI Houtzdale**
Unit #:	**AHU-9**

CONVERSION FACTORS				Design Conditions		
SLR	**93%**	Sensible	/latent	Supply CFM	10,500	
FANHP (F.L.)	**8.28**	HP@	10,500	Total Cooling	243,750	300,000
RAFHP (F.L.)	**-**	HP@	8,925	Sensible Cooling	226,800	
FMEFF	**90%**	Percent		Air Side TD	20.00	
CFMREF	**10,500**	CFM		Supply HP	10	
DREFF	**97%**	Percent	(@F.L.)	T.S.P.	3.0	
MINVOL	**4,200**	CFM	CFM	Supply Fan Eff	60%	
Conv. Fact.	6,344	60	0.24	Return CFM	8,925	
Off Coil Conditions	61	26.34	28	Return T.S.P.		
Btu/CCF	102,800	Heat Pipe Eff:	-	Return Fan HP	-	
kW/Ton	0.65			Return Fan Eff	70%	

Existing Operation

Bin DB temp/ WetBulb	Average Temp	enthapy OA btu/lb	enthapy Mixed Air btu/lb	Bin hrs	SA air flow CFM	Fan kW	Fan kWh	OA air flow CFM	Discharge Air Temp	MAT Air Temp	Heat Pipe Air Temp DT °F	MAT Air Temp w/ Hpipe	Space Temp setpoint	Total Cooling BTU/Hr	Total Cooling kWh/year	Total Cooling Demand Tons	Total Heating BTU/Hr	Total Reheat BTU/Hr	Run Fraction	Existing Heating CCF/year
-15 -11 / -12.6	-12.5	0.0		0	10,500	6.898	-	1,575	75.0°	59.3°	0.0°	59.3°	72°				177,755		100%	-
-10 -6 / -7.1	-7.5	0.0		0	10,500	6.898	-	1,575	75.0°	60.1°	0.0°	60.1°	72°				169,250		100%	-
-5 -1 / -2.9	-2.5	0.0		0	10,500	6.898	-	1,575	75.0°	60.8°	0.0°	60.8°	72°				160,745		100%	-
0-4/1	2.5	0.0		2	10,500	6.898	14	1,575	75.0°	61.6°	0.0°	61.6°	72°				152,240		51%	1.93
5-9/6	7.5	2.9		5	10,500	6.898	34	1,575	75.0°	62.3°	0.0°	62.3°	72°				143,735		48%	4.29
10-14/11	12.5	4.2		77	10,500	6.898	531	1,575	75.0°	63.1°	0.0°	63.1°	72°				135,230		45%	58.54
15-19/15	17.5	5.7		270	10,500	6.898	1,862	1,575	75.0°	63.8°	0.0°	63.8°	72°				126,725		42%	180.25
20-24/20	22.5	7.3		452	10,500	6.898	3,118	1,575	75.0°	64.6°	0.0°	64.6°	72°				118,220		39%	262.61
25-29/25	27.5	9.0		411	10,500	6.898	2,835	1,575	75.0°	65.3°	0.0°	65.3°	72°				109,715		37%	205.67
30-34/30	32.5	11.1		897	10,500	6.898	6,187	1,575	75.0°	66.1°	0.0°	66.1°	72°				101,210		34%	381.97
35-39/34	37.5	12.8		808	10,500	6.898	5,573	1,575	75.0°	66.8°	0.0°	66.8°	72°				92,705		31%	288.67
40-44/38	42.5	15.1		722	10,500	6.898	4,980	1,575	75.0°	67.6°	0.0°	67.6°	72°				84,200		28%	212.79
45-49/42	47.5	17.0		512	10,500	6.898	3,532	1,575	75.0°	68.3°	0.0°	68.3°	72°				75,695		50%	241.67
50-54/47	52.5	19.7	25.8	659	10,500	6.898	4,546	1,575	61.0°	69.1°	0.0°	69.1°	72°	91,571	1,228	7.63	-		38%	-
55-59/52	57.5	22.9	26.0	829	10,500	6.898	5,718	1,575	61.0°	69.8°	0.0°	69.8°	72°	100,076	1,845	8.34	-		41%	-
60-64/56	62.5	25.7	26.2	1010	10,500	6.898	6,967	1,575	61.0°	70.6°	0.0°	70.6°	72°	108,581	2,646	9.05	-		45%	-
65-69/60	67.5	28.7	26.4	812	10,500	6.898	5,601	1,575	61.0°	71.3°	0.0°	71.3°	72°	117,086	2,474	9.76			48%	-
70-74/63	72.5	31.0	26.6	470	10,500	6.898	3,242	1,575	61.0°	72.1°	0.0°	72.1°	72°	125,591	1,647	10.47			52%	-
75-79/66	77.5	32.4	26.8	436	10,500	6.898	3,007	1,575	61.0°	72.8°	0.0°	72.8°	72°	134,096	1,742	11.17			55%	-
80-84/69	82.5	33.8	26.9	265	10,500	6.898	1,828	1,575	61.0°	73.6°	0.0°	73.6°	72°	142,601	1,197	11.88			59%	-
85-89/72	87.5	36.5	27.1	106	10,500	6.898	731	1,575	61.0°	74.3°	0.0°	74.3°	72°	151,106	538	12.59			62%	-
90-94/73	92.5	39.2	27.3	17	10,500	6.898	117	1,575	61.0°	75.1°	0.0°	75.1°	72°	159,611	96	13.30			65%	
				8,760.00			60,425								13,414	13.30				1,838

CONVERSION FACTORS				Design Conditions		
	93%	Sensible	/latent	Supply CFM	10,500	
FANHP (F.L.)	**8.28**	HP@	10,500	Total Cooling	243,750	300,000
RAFHP (F.L.)	**-**	HP@	8,925	Sensible Cooling	226,800	
FMEFF	**90%**	Percent		Air Side TD	20.00	
CFMREF	**10,500**	CFM		Supply HP	10.00	
DREFF	**40%**	Percent	(@F.L.)	T.S.P.	3.0	
MINVOL	**4,200**	CFM	CFM	Supply Fan Eff	60%	
Conv. Fact.	6,344	60	0.24	Return CFM	8,925	
Off Coil Conditions	61	26.34	28	Return T.S.P.	-	
Gas (BTU/CCF):	102,800	Heat Pipe Eff:	-	Return Fan HP		
kW/ton=	0.65			Return Fan Eff	60%	

Proposed Operation

Bin DB temp/ WetBulb	Average Temp	enthapy OA btu/lb	enthapy Mixed Air btu/lb	Bin hrs	SA air flow CFM	Fan kW	Fan kWh	OA air flow CFM	Discharge Air Temp	MAT Air Temp	Heat Pipe Air Temp DT °F	MAT Air Temp w/ Hpipe	Space Temp setpoint	Total Cooling BTU/Hr	Total Cooling kWh/year	Total Cooling Demand Tons	Total Heating BTU/Hr	Total Reheat BTU/Hr	Run Fraction	Proposed Heating CCF/year
-15 -11 / -12.6	-12.5	0.0		0	10,500	6.898	-	1,575	75.0°	59.3°	0.0°	59.3°	72°				177,755		100%	-
-10 -6 / -7.1	-7.5	0.0		0	10,500	6.898	-	1,575	75.0°	60.1°	0.0°	60.1°	72°				169,250		100%	-
-5 -1 / -2.9	-2.5	0.0		0	10,500	6.898	-	1,575	75.0°	60.8°	0.0°	60.8°	72°				160,745		100%	-
0-4/1	2.5	0.0		2	10,500	6.898	14	1,575	75.0°	61.6°	0.0°	61.6°	72°				152,240		51%	1.93
5-9/6	7.5	2.9		5	10,500	6.898	34	1,575	74.0°	62.3°	0.0°	62.3°	72°				132,395		48%	3.96
10-14/11	12.5	4.2		77	10,500	6.898	531	1,575	73.0°	63.1°	0.0°	63.1°	72°				112,550		45%	48.72
15-19/15	17.5	5.7		270	10,500	6.898	1,862	1,575	72.0°	63.8°	0.0°	63.8°	72°				92,705		42%	131.86
20-24/20	22.5	7.3		452	10,500	6.898	3,118	1,575	72.0°	64.6°	0.0°	64.6°	72°				84,200		39%	187.04
25-29/25	27.5	9.0		411	10,500	6.898	2,835	1,575	72.0°	65.3°	0.0°	65.3°	72°				75,695		37%	141.89
30-34/30	32.5	11.1		897	10,500	6.898	6,187	1,575	72.0°	66.1°	0.0°	66.1°	72°				67,190		34%	253.57
35-39/34	37.5	12.8		808	10,500	6.898	5,573	1,575	72.0°	66.8°	0.0°	66.8°	72°				58,685		31%	182.74
40-44/38	42.5	15.1		722	10,500	6.898	4,980	1,575	72.0°	67.6°	0.0°	67.6°	72°				50,180		28%	126.81
45-49/42	47.5	17.0		512	10,500	6.898	3,532	1,575	72.0°	68.3°	0.0°	68.3°	72°				41,675		50%	133.05
50-54/47	52.5	19.7	25.8	659	10,500	6.898	4,546	1,575	61.0°	69.1°	0.0°	69.1°	72°	91,571	1,228	7.63			38%	-
55-59/52	57.5	22.9	26.0	829	10,500	6.898	5,718	1,575	61.0°	69.8°	0.0°	69.8°	72°	100,076	1,845	8.34			41%	-
60-64/56	62.5	25.7	26.2	1010	10,500	6.898	6,967	1,575	61.0°	70.6°	0.0°	70.6°	72°	108,581	2,646	9.05			45%	-
65-69/60	67.5	28.7	26.4	812	10,500	6.898	5,601	1,575	61.0°	71.3°	0.0°	71.3°	72°	117,086	2,474	9.76			48%	-
70-74/63	72.5	31.0	26.6	470	10,500	6.898	3,242	1,575	61.0°	72.1°	0.0°	72.1°	72°	125,591	1,647	10.47			52%	-
75-79/66	77.5	32.4	26.8	436	10,500	6.898	3,007	1,575	61.0°	72.8°	0.0°	72.8°	72°	134,096	1,742	11.17			55%	-
80-84/69	82.5	33.8	26.9	265	10,500	6.898	1,828	1,575	61.0°	73.6°	0.0°	73.6°	72°	142,601	1,197	11.88			59%	-
85-89/72	87.5	36.5	27.1	106	10,500	6.898	731	1,575	61.0°	74.3°	0.0°	74.3°	72°	151,106	538	12.59			62%	-
90-94/73	92.5	39.2	27.3	17	10,500	6.898	117	1,575	61.0°	75.1°	0.0°	75.1°	72°	159,611	96	13.30			65%	
				8760			60,425								13,414	13.30				1,212

Title	**Control Upgrades**
ECM#	**7**
Project:	**SCI Houtzdale**
Site:	**SCI Houtzdale**
Unit #:	**AHU-22**

CONVERSION FACTORS				Design Conditions		
SLR	**57%**	Sensible	/latent	Supply CFM	2,190	
FANHP (F.L.)	**1.73**	HP@	2,190	Total Cooling	112,500	50,000
RAFHP (F.L.)	**0.73**	HP@	1,862	Sensible Cooling	64,097	
FMEFF	**88%**	Percent		Air Side TD	27.10	
CFMREF	**2,190**	CFM		Supply HP	3	
DREFF	**97%**	Percent	(@F.L.)	T.S.P.	3.0	
MINVOL	**876**	CFM	CFM	Supply Fan Eff	60%	
Conv. Fact.	6,344	60	0.24	Return CFM	1,862	
Off Coil Conditions	53	22.16	28	Return T.S.P.	1.5	
Btu/CCF	102,800	Heat Pipe Eff:	-	Return Fan HP	0.8	
kW/Ton	0.65			Return Fan Eff	60%	

Existing Operation

Bin DB temp/ WetBulb	Average Temp	enthapy OA btu/lb	enthapy Mixed Air btu/lb	Bin hrs	SA air flow CFM	Fan kW	Fan kWh	OA air flow CFM	Discharge Air Temp	MAT Air Temp	Heat Pipe Air Temp DT °F	MAT Air Temp w/ Hpipe	Space Temp setpoint	Total Cooling BTU/Hr	Total Cooling kWh/year	Total Cooling Demand Tons	Total Heating BTU/Hr	Total Reheat BTU/Hr	Run Fraction	Existing Heating CCF/year
-15 -11 / -12.6	-12.5	0.0		0	2,190	2.135	-	329	75.0°	59.3°	0.0°	59.3°	72°				37,075		100%	-
-10 -6 / -7.1	-7.5	0.0		0	2,190	2.135	-	329	75.0°	60.1°			72°				50,000		100%	-
-5 -1 / -2.9	-2.5	0.0		0	2,190	2.135	-	329	75.0°	60.8°			72°				50,000		100%	-
0-4/1	2.5	0.0		2	2,190	2.135	4	329	75.0°	61.6°	0.0°	61.6°	72°				31,753		64%	0.50
5-9/6	7.5	2.9		5	2,190	2.135	11	329	75.0°	62.3°	0.0°	62.3°	72°				29,979		60%	1.12
10-14/11	12.5	4.2		77	2,190	2.135	164	329	75.0°	63.1°	0.0°	63.1°	72°				28,205		56%	15.28
15-19/15	17.5	5.7		270	2,190	2.135	576	329	75.0°	63.8°	0.0°	63.8°	72°				26,431		53%	47.05
20-24/20	22.5	7.3		452	2,190	2.135	965	329	75.0°	64.6°	0.0°	64.6°	72°				24,657		49%	68.54
25-29/25	27.5	9.0		411	2,190	2.135	877	329	75.0°	65.3°	0.0°	65.3°	72°				22,883		46%	53.68
30-34/30	32.5	11.1		897	2,190	2.135	1,915	329	75.0°	66.1°	0.0°	66.1°	72°				21,109		42%	99.70
35-39/34	37.5	12.8		808	2,190	2.135	1,725	329	75.0°	66.8°	0.0°	66.8°	72°				19,336		39%	75.35
40-44/38	42.5	15.1		722	2,190	2.135	1,541	329	75.0°	67.6°	0.0°	67.6°	72°				17,562		35%	55.54
45-49/42	47.5	17.0		512	2,190	2.135	1,093	329	75.0°	68.3°	0.0°	68.3°	72°				15,788		50%	50.40
50-54/47	52.5	19.7	25.8	659	2,190	2.135	1,407	329	53.4°	69.1°	0.0°	69.1°	72°	37,075	436	3.09	-		33%	-
55-59/52	57.5	22.9	26.0	829	2,190	2.135	1,770	329	53.4°	69.8°	0.0°	69.8°	72°	38,848	602	3.24	-		35%	-
60-64/56	62.5	25.7	26.2	1010	2,190	2.135	2,156	329	53.4°	70.6°	0.0°	70.6°	72°	40,622	802	3.39	-		36%	-
65-69/60	67.5	28.7	26.4	812	2,190	2.135	1,734	329	53.4°	71.3°	0.0°	71.3°	72°	42,396	703	3.53			38%	-
70-74/63	72.5	31.0	26.6	470	2,190	2.135	1,003	329	53.4°	72.1°	0.0°	72.1°	72°	44,170	442	3.68			39%	-
75-79/66	77.5	32.4	26.8	436	2,190	2.135	931	329	53.4°	72.8°	0.0°	72.8°	72°	45,944	443	3.83			41%	-
80-84/69	82.5	33.8	26.9	265	2,190	2.135	566	329	53.4°	73.6°	0.0°	73.6°	72°	47,718	291	3.98			42%	-
85-89/72	87.5	36.5	27.1	106	2,190	2.135	226	329	53.4°	74.3°	0.0°	74.3°	72°	49,492	125	4.12			44%	-
90-94/73	92.5	39.2	27.3	17	2,190	2.135	36	329	53.4°	75.1°	0.0°	75.1°	72°	51,266	22	4.27			46%	
				8,760.00			18,702								3,865	4.27				467

CONVERSION FACTORS				Design Conditions		
	57%	Sensible	/latent	Supply CFM	2,190	
FANHP (F.L.)	**1.73**	HP@	2,190	Total Cooling	112,500	50,000
RAFHP (F.L.)	**0.73**	HP@	1,862	Sensible Cooling	64,097	
FMEFF	**88%**	Percent		Air Side TD	27.10	
CFMREF	**2,190**	CFM		Supply HP	3.00	
DREFF	**40%**	Percent	(@F.L.)	T.S.P.	3.0	
MINVOL	**876**	CFM	CFM	Supply Fan Eff	60%	
Conv. Fact.	6,344	60	0.24	Return CFM	1,862	
Off Coil Conditions	53	22.16	28	Return T.S.P.	1.5	
Gas (BTU/CCF):	102,800	Heat Pipe Eff:	-	Return Fan HP	0.8	
kW/ton=	0.65			Return Fan Eff	60%	

Proposed Operation

Bin DB temp/ WetBulb	Average Temp	enthapy OA btu/lb	enthapy Mixed Air btu/lb	Bin hrs	SA air flow CFM	Fan kW	Fan kWh	OA air flow CFM	Discharge Air Temp	MAT Air Temp	Heat Pipe Air Temp DT °F	MAT Air Temp w/ Hpipe	Space Temp setpoint	Total Cooling BTU/Hr	Total Cooling kWh/year	Total Cooling Demand Tons	Total Heating BTU/Hr	Total Reheat BTU/Hr	Run Fraction	Proposed Heating CCF/year
-15 -11 / -12.6	-12.5	0.0		0	2,190	2.135	-	329	75.0°	59.3°	0.0°	59.3°	72°				37,075		100%	-
-10 -6 / -7.1	-7.5	0.0		0	2,190	2.135	-	329	75.0°	60.1°	0.0°	60.1°	72°				35,301		100%	-
-5 -1 / -2.9	-2.5	0.0		0	2,190	2.135	-	329	75.0°	60.8°	0.0°	60.8°	72°				33,527		100%	-
0-4/1	2.5	0.0		2	2,190	2.135	4	329	75.0°	61.6°	0.0°	61.6°	72°				31,753		64%	0.50
5-9/6	7.5	2.9		5	2,190	2.135	11	329	74.0°	62.3°	0.0°	62.3°	72°				27,614		60%	1.03
10-14/11	12.5	4.2		77	2,190	2.135	164	329	73.0°	63.1°	0.0°	63.1°	72°				23,475		56%	12.72
15-19/15	17.5	5.7		270	2,190	2.135	576	329	72.0°	63.8°	0.0°	63.8°	72°				19,336		53%	34.42
20-24/20	22.5	7.3		452	2,190	2.135	965	329	72.0°	64.6°	0.0°	64.6°	72°				17,562		49%	48.82
25-29/25	27.5	9.0		411	2,190	2.135	877	329	72.0°	65.3°	0.0°	65.3°	72°				15,788		46%	37.04
30-34/30	32.5	11.1		897	2,190	2.135	1,915	329	72.0°	66.1°	0.0°	66.1°	72°				14,014		42%	66.19
35-39/34	37.5	12.8		808	2,190	2.135	1,725	329	72.0°	66.8°	0.0°	66.8°	72°				12,240		39%	47.70
40-44/38	42.5	15.1		722	2,190	2.135	1,541	329	72.0°	67.6°	0.0°	67.6°	72°				10,466		35%	33.10
45-49/42	47.5	17.0		512	2,190	2.135	1,093	329	72.0°	68.3°	0.0°	68.3°	72°				8,692		50%	27.75
50-54/47	52.5	19.7	25.8	659	2,190	2.135	1,407	329	53.4°	69.1°	0.0°	69.1°	72°	37,075	436	3.09			33%	-
55-59/52	57.5	22.9	26.0	829	2,190	2.135	1,770	329	53.4°	69.8°	0.0°	69.8°	72°	38,848	602	3.24			35%	-
60-64/56	62.5	25.7	26.2	1010	2,190	2.135	2,156	329	53.4°	70.6°	0.0°	70.6°	72°	40,622	802	3.39			36%	-
65-69/60	67.5	28.7	26.4	812	2,190	2.135	1,734	329	53.4°	71.3°	0.0°	71.3°	72°	42,396	703	3.53			38%	-
70-74/63	72.5	31.0	26.6	470	2,190	2.135	1,003	329	53.4°	72.1°	0.0°	72.1°	72°	44,170	442	3.68			39%	-
75-79/66	77.5	32.4	26.8	436	2,190	2.135	931	329	53.4°	72.8°	0.0°	72.8°	72°	45,944	443	3.83			41%	-
80-84/69	82.5	33.8	26.9	265	2,190	2.135	566	329	53.4°	73.6°	0.0°	73.6°	72°	47,718	291	3.98			42%	-
85-89/72	87.5	36.5	27.1	106	2,190	2.135	226	329	53.4°	74.3°	0.0°	74.3°	72°	49,492	125	4.12			44%	-
90-94/73	92.5	39.2	27.3	17	2,190	2.135	36	329	53.4°	75.1°	0.0°	75.1°	72°	51,266	22	4.27			46%	
				8,760.00			18,702								3,865	4.27				309

Title	**Control Upgrades**
ECM#	**7**
Project:	**SCI Houtzdale**
Site:	**SCI Houtzdale**
Unit #:	**AHU-23**

CONVERSION FACTORS				Design Conditions		
SLR	**96%**	Sensible	/latent	Supply CFM	8,000	
FANHP (F.L.)	**6.31**	HP@	8,000	Total Cooling	171,750	96,000
RAFHP (F.L.)	**-**	HP@	6,800	Sensible Cooling	164,160	
FMEFF	**90%**	Percent		Air Side TD	19.00	
CFMREF	**8,000**	CFM		Supply HP	8	
DREFF	**97%**	Percent	(@F.L.)	T.S.P.	3.0	
MINVOL	**3,200**	CFM	CFM	Supply Fan Eff	60%	
Conv. Fact.	6,344	60	0.24	Return CFM	6,800	
Off Coil Conditions	60	25.94	28	Return T.S.P.	-	
Btu/CCF	102,800	Heat Pipe Eff:	-	Return Fan HP	-	
kW/Ton	0.65			Return Fan Eff	60%	

Existing Operation

Bin DB temp/ WetBulb	Average Temp	enthapy OA btu/lb	enthapy Mixed Air btu/lb	Bin hrs	SA air flow CFM	Fan kW	Fan kWh	OA air flow CFM	Discharge Air Temp	MAT Air Temp	Heat Pipe Air Temp DT °F	MAT Air Temp w/ Hpipe	Space Temp setpoint	Total Cooling BTU/Hr	Total Cooling kWh/year	Total Cooling Demand Tons	Total Heating BTU/Hr	Total Reheat BTU/Hr	Run Fraction	Existing Heating CCF/year
-15 -11 / -12.6	-12.5	0.0		0	8,000	5.255	-	1,200	75.0°	59.3°	0.0°	59.3°	72°				96,000		100%	-
-10 -6 / -7.1	-7.5	0.0		0	8,000	5.255	-	1,200	75.0°	60.1°	0.0°	60.1°	72°				96,000		100%	-
-5 -1 / -2.9	-2.5	0.0		0	8,000	5.255	-	1,200	75.0°	60.8°	0.0°	60.8°	72°				96,000		100%	-
0-4/1	2.5	0.0		2	8,000	5.255	11	1,200	75.0°	61.6°	0.0°	61.6°	72°				96,000		100%	2.39
5-9/6	7.5	2.9		5	8,000	5.255	26	1,200	75.0°	62.3°	0.0°	62.3°	72°				96,000		100%	5.99
10-14/11	12.5	4.2		77	8,000	5.255	405	1,200	75.0°	63.1°	0.0°	63.1°	72°				96,000		100%	92.19
15-19/15	17.5	5.7		270	8,000	5.255	1,419	1,200	75.0°	63.8°	0.0°	63.8°	72°				96,000		100%	323.26
20-24/20	22.5	7.3		452	8,000	5.255	2,375	1,200	75.0°	64.6°	0.0°	64.6°	72°				90,072		94%	476.39
25-29/25	27.5	9.0		411	8,000	5.255	2,160	1,200	75.0°	65.3°	0.0°	65.3°	72°				83,592		87%	373.09
30-34/30	32.5	11.1		897	8,000	5.255	4,714	1,200	75.0°	66.1°	0.0°	66.1°	72°				77,112		80%	692.91
35-39/34	37.5	12.8		808	8,000	5.255	4,246	1,200	75.0°	66.8°	0.0°	66.8°	72°				70,632		74%	523.67
40-44/38	42.5	15.1		722	8,000	5.255	3,794	1,200	75.0°	67.6°	0.0°	67.6°	72°				64,152		67%	386.01
45-49/42	47.5	17.0		512	8,000	5.255	2,691	1,200	75.0°	68.3°	0.0°	68.3°	72°				57,672		50%	184.13
50-54/47	52.5	19.7	25.8	659	8,000	5.255	3,463	1,200	60.3°	69.1°	0.0°	69.1°	72°	75,816	1,195	6.32	-		44%	-
55-59/52	57.5	22.9	26.0	829	8,000	5.255	4,357	1,200	60.3°	69.8°	0.0°	69.8°	72°	82,296	1,771	6.86	-		48%	-
60-64/56	62.5	25.7	26.2	1010	8,000	5.255	5,308	1,200	60.3°	70.6°	0.0°	70.6°	72°	88,776	2,510	7.40	-		52%	-
65-69/60	67.5	28.7	26.4	812	8,000	5.255	4,267	1,200	60.3°	71.3°	0.0°	71.3°	72°	95,256	2,324	7.94			55%	-
70-74/63	72.5	31.0	26.6	470	8,000	5.255	2,470	1,200	60.3°	72.1°	0.0°	72.1°	72°	101,736	1,534	8.48			59%	-
75-79/66	77.5	32.4	26.8	436	8,000	5.255	2,291	1,200	60.3°	72.8°	0.0°	72.8°	72°	108,216	1,610	9.02			63%	-
80-84/69	82.5	33.8	26.9	265	8,000	5.255	1,393	1,200	60.3°	73.6°	0.0°	73.6°	72°	114,696	1,099	9.56			67%	-
85-89/72	87.5	36.5	27.1	106	8,000	5.255	557	1,200	60.3°	74.3°	0.0°	74.3°	72°	121,176	491	10.10			71%	-
90-94/73	92.5	39.2	27.3	17	8,000	5.255	89	1,200	60.3°	75.1°	0.0°	75.1°	72°	127,656	87	10.64			74%	
				8,760.00			46,038								12,622	10.64				3,060

CONVERSION FACTORS				Design Conditions		
	96%	Sensible	/latent	Supply CFM	8,000	
FANHP (F.L.)	**6.31**	HP@	8,000	Total Cooling	171,750	96,000
RAFHP (F.L.)	**-**	HP@	6,800	Sensible Cooling	164,160	
FMEFF	**90%**	Percent		Air Side TD	19.00	
CFMREF	**8,000**	CFM		Supply HP	7.50	
DREFF	**97%**	Percent	(@F.L.)	T.S.P.	3.0	
MINVOL	**3,200**	CFM	CFM	Supply Fan Eff	60%	
Conv. Fact.	6,344	60	0.24	Return CFM	6,800	
Off Coil Conditions	60	25.94	28	Return T.S.P.	-	
Gas (BTU/CCF):	102,800	Heat Pipe Eff:	-	Return Fan HP	-	
kW/ton=	0.65			Return Fan Eff	60%	

Proposed Operation

Bin DB temp/ WetBulb	Average Temp	enthapy OA btu/lb	enthapy Mixed Air btu/lb	Bin hrs	SA air flow CFM	Fan kW	Fan kWh	OA air flow CFM	Discharge Air Temp	MAT Air Temp	Heat Pipe Air Temp DT °F	MAT Air Temp w/ Hpipe	Space Temp setpoint	Total Cooling BTU/Hr	Total Cooling kWh/year	Total Cooling Demand Tons	Total Heating BTU/Hr	Total Reheat BTU/Hr	Run Fraction	Proposed Heating CCF/year
-15 -11 / -12.6	-12.5	0.0		0	8,000	5.255	-	1,200	75.0°	59.3°	0.0°	59.3°	72°				96,000		100%	-
-10 -6 / -7.1	-7.5	0.0		0	8,000	5.255	-	1,200	75.0°	60.1°	0.0°	60.1°	72°				96,000		100%	-
-5 -1 / -2.9	-2.5	0.0		0	8,000	5.255	-	1,200	75.0°	60.8°	0.0°	60.8°	72°				96,000		100%	-
0-4/1	2.5	0.0		2	8,000	5.255	11	1,200	75.0°	61.6°	0.0°	61.6°	72°				96,000		100%	2.39
5-9/6	7.5	2.9		5	8,000	5.255	26	1,200	74.0°	62.3°	0.0°	62.3°	72°				96,000		100%	5.99
10-14/11	12.5	4.2		77	8,000	5.255	405	1,200	73.0°	63.1°	0.0°	63.1°	72°				85,752		100%	82.35
15-19/15	17.5	5.7		270	8,000	5.255	1,419	1,200	72.0°	63.8°	0.0°	63.8°	72°				70,632		100%	237.84
20-24/20	22.5	7.3		452	8,000	5.255	2,375	1,200	72.0°	64.6°	0.0°	64.6°	72°				64,152		94%	339.30
25-29/25	27.5	9.0		411	8,000	5.255	2,160	1,200	72.0°	65.3°	0.0°	65.3°	72°				57,672		87%	257.40
30-34/30	32.5	11.1		897	8,000	5.255	4,714	1,200	72.0°	66.1°	0.0°	66.1°	72°				51,192		80%	460.00
35-39/34	37.5	12.8		808	8,000	5.255	4,246	1,200	72.0°	66.8°	0.0°	66.8°	72°				44,712		74%	331.50
40-44/38	42.5	15.1		722	8,000	5.255	3,794	1,200	72.0°	67.6°	0.0°	67.6°	72°				38,232		67%	230.05
45-49/42	47.5	17.0		512	8,000	5.255	2,691	1,200	72.0°	68.3°	0.0°	68.3°	72°				31,752		50%	101.37
50-54/47	52.5	19.7	25.8	659	8,000	5.255	3,463	1,200	60.3°	69.1°	0.0°	69.1°	72°	75,816	1,195	6.32			44%	-
55-59/52	57.5	22.9	26.0	829	8,000	5.255	4,357	1,200	60.3°	69.8°	0.0°	69.8°	72°	82,296	1,771	6.86			48%	-
60-64/56	62.5	25.7	26.2	1010	8,000	5.255	5,308	1,200	60.3°	70.6°	0.0°	70.6°	72°	88,776	2,510	7.40			52%	-
65-69/60	67.5	28.7	26.4	812	8,000	5.255	4,267	1,200	60.3°	71.3°	0.0°	71.3°	72°	95,256	2,324	7.94			55%	-
70-74/63	72.5	31.0	26.6	470	8,000	5.255	2,470	1,200	60.3°	72.1°	0.0°	72.1°	72°	101,736	1,534	8.48			59%	-
75-79/66	77.5	32.4	26.8	436	8,000	5.255	2,291	1,200	60.3°	72.8°	0.0°	72.8°	72°	108,216	1,610	9.02			63%	-
80-84/69	82.5	33.8	26.9	265	8,000	5.255	1,393	1,200	60.3°	73.6°	0.0°	73.6°	72°	114,696	1,099	9.56			67%	-
85-89/72	87.5	36.5	27.1	106	8,000	5.255	557	1,200	60.3°	74.3°	0.0°	74.3°	72°	121,176	491	10.10			71%	-
90-94/73	92.5	39.2	27.3	17	8,000	5.255	89	1,200	60.3°	75.1°	0.0°	75.1°	72°	127,656	87	10.64			74%	
				8,760.00			46,038								12,622	10.64				2,048

AHU-23 H Block

Title	**Control Upgrades**
ECM#	**7**
Project:	**SCI Houtzdale**
Site:	**SCI Houtzdale**
Unit #:	**AHU-24**

CONVERSION FACTORS				Design Conditions		
SLR	**99%**	Sensible	/latent	Supply CFM	8,000	
FANHP (F.L.)	**6.39**	HP@	8,000	Total Cooling	171,000	104,000
RAFHP (F.L.)	**-**	HP@	6,800	Sensible Cooling	168,480	
FMEFF	**90%**	Percent		Air Side TD	19.50	
CFMREF	**8,000**	CFM		Supply HP	8	
DREFF	**97%**	Percent	(@F.L.)	T.S.P.	3.0	
MINVOL	**3,200**	CFM	CFM	Supply Fan Eff	60%	
Conv. Fact.	6,344	60	0.24	Return CFM	6,800	
Off Coil Conditions	60	25.87	28	Return T.S.P.	-	
Btu/CCF	102,800	Heat EX Eff Wtr:		Return Fan HP		
kW/Ton	0.65	Heat EX Eff Smr:		Return Fan Eff	60%	

Existing Operation

Bin DB temp/ WetBulb	Average Temp	enthapy OA btu/lb	enthapy Mixed Air btu/lb	Bin hrs	SA air flow CFM	Fan kW	Fan kWh	OA air flow CFM	Discharge Air Temp	MAT Air Temp	Heat Pipe Air Temp DT °F	MAT Air Temp w/ Hpipe	Space Temp setpoint	Total Cooling BTU/Hr	Total Cooling kWh/year	Total Cooling Demand Tons	Total Heating BTU/Hr	Total Reheat BTU/Hr	Run Fraction	Existing Heating CCF/year
-15 -11 / -12.6	-12.5	0.0		0	8,000	5.326	-	1,200	75.0°	59.3°	0.0°	59.3°	72°				104,000		100%	-
-10 -6 / -7.1	-7.5	0.0		0	8,000	5.326	-	1,200	75.0°	60.1°	0.0°	60.1°	72°				104,000		100%	-
-5 -1 / -2.9	-2.5	0.0		0	8,000	5.326	-	1,200	75.0°	60.8°	0.0°	60.8°	72°				104,000		100%	-
0-4/1	2.5	0.0		2	8,000	5.326	11	1,200	75.0°	61.6°	0.0°	61.6°	72°				104,000		100%	2.59
5-9/6	7.5	2.9		5	8,000	5.326	27	1,200	75.0°	62.3°	0.0°	62.3°	72°				104,000		100%	6.49
10-14/11	12.5	4.2		77	8,000	5.326	410	1,200	75.0°	63.1°	0.0°	63.1°	72°				103,032		99%	98.02
15-19/15	17.5	5.7		270	8,000	5.326	1,438	1,200	75.0°	63.8°	0.0°	63.8°	72°				96,552		93%	301.83
20-24/20	22.5	7.3		452	8,000	5.326	2,407	1,200	75.0°	64.6°	0.0°	64.6°	72°				90,072		87%	439.74
25-29/25	27.5	9.0		411	8,000	5.326	2,189	1,200	75.0°	65.3°	0.0°	65.3°	72°				83,592		80%	344.39
30-34/30	32.5	11.1		897	8,000	5.326	4,777	1,200	75.0°	66.1°	0.0°	66.1°	72°				77,112		74%	639.61
35-39/34	37.5	12.8		808	8,000	5.326	4,303	1,200	75.0°	66.8°	0.0°	66.8°	72°				70,632		68%	483.39
40-44/38	42.5	15.1		722	8,000	5.326	3,845	1,200	75.0°	67.6°	0.0°	67.6°	72°				64,152		62%	356.32
45-49/42	47.5	17.0		512	8,000	5.326	2,727	1,200	75.0°	68.3°	0.0°	68.3°	72°				57,672		75%	276.19
50-54/47	52.5	19.7	25.8	659	8,000	5.326	3,510	1,200	59.9°	69.1°	0.0°	69.1°	72°	79,272	1,312	6.61	-		46%	
55-59/52	57.5	22.9	26.0	829	8,000	5.326	4,415	1,200	59.9°	69.8°	0.0°	69.8°	72°	85,752	1,931	7.15	-		50%	
60-64/56	62.5	25.7	26.2	1010	8,000	5.326	5,379	1,200	59.9°	70.6°	0.0°	70.6°	72°	92,232	2,722	7.69	-		54%	
65-69/60	67.5	28.7	26.4	812	8,000	5.326	4,324	1,200	59.9°	71.3°	0.0°	71.3°	72°	98,712	2,506	8.23			58%	
70-74/63	72.5	31.0	26.6	470	8,000	5.326	2,503	1,200	59.9°	72.1°	0.0°	72.1°	72°	105,192	1,647	8.77			62%	
75-79/66	77.5	32.4	26.8	436	8,000	5.326	2,322	1,200	59.9°	72.8°	0.0°	72.8°	72°	111,672	1,722	9.31			65%	
80-84/69	82.5	33.8	26.9	265	8,000	5.326	1,411	1,200	59.9°	73.6°	0.0°	73.6°	72°	118,152	1,172	9.85			69%	
85-89/72	87.5	36.5	27.1	106	8,000	5.326	565	1,200	59.9°	74.3°	0.0°	74.3°	72°	124,632	522	10.39			73%	
90-94/73	92.5	39.2	27.3	17	8,000	5.326	91	1,200	59.9°	75.1°	0.0°	75.1°	72°	131,112	93	10.93			77%	
				8,760.00			46,652								13,626	10.93				2,949

CONVERSION FACTORS				Design Conditions		
	99%	Sensible	/latent	Supply CFM	8,000	
FANHP (F.L.)	**6.39**	HP@	8,000	Total Cooling	171,000	104,000
RAFHP (F.L.)	**-**	HP@	6,800	Sensible Cooling	168,480	
FMEFF	**90%**	Percent		Air Side TD	19.50	
CFMREF	**8,000**	CFM		Supply HP	7.50	
DREFF	**97%**	Percent	(@F.L.)	T.S.P.	3.0	
MINVOL	**3,200**	CFM	CFM	Supply Fan Eff	60%	
Conv. Fact.	6,344	60	0.24	Return CFM	6,800	
Off Coil Conditions	60	25.87	28	Return T.S.P.	-	
Ht Pmp COP	102,800	Heat EX Eff Wtr:		Return Fan HP		
kW/Ton	0.65	Heat EX Eff Smr:		Return Fan Eff	60%	

Proposed Operation

Bin DB temp/ WetBulb	Average Temp	enthapy OA btu/lb	enthapy Mixed Air btu/lb	Bin hrs	SA air flow CFM	Fan kW	Fan kWh	OA air flow CFM	Discharge Air Temp	MAT Air Temp	Heat Pipe Air Temp DT °F	MAT Air Temp w/ Hpipe	Space Temp setpoint	Total Cooling BTU/Hr	Total Cooling kWh/year	Total Cooling Demand Tons	Total Heating BTU/Hr	Total Reheat BTU/Hr	Run Fraction	Proposed Heating CCF/year
-15 -11 / -12.6	-12.5	0.0		0	8,000	5.326	-	1,200	75.0°	59.3°	0.0°	59.3°	72°				104,000		100%	-
-10 -6 / -7.1	-7.5	0.0		0	8,000	5.326	-	1,200	75.0°	60.1°	0.0°	60.1°	72°				104,000		100%	-
-5 -1 / -2.9	-2.5	0.0		0	8,000	5.326	-	1,200	75.0°	60.8°	0.0°	60.8°	72°				104,000		100%	-
0-4/1	2.5	0.0		2	8,000	5.326	11	1,200	75.0°	61.6°	0.0°	61.6°	72°				104,000		100%	2.59
5-9/6	7.5	2.9		5	8,000	5.326	27	1,200	74.0°	62.3°	0.0°	62.3°	72°				100,872		100%	6.29
10-14/11	12.5	4.2		77	8,000	5.326	410	1,200	73.0°	63.1°	0.0°	63.1°	72°				85,752		99%	81.58
15-19/15	17.5	5.7		270	8,000	5.326	1,438	1,200	72.0°	63.8°	0.0°	63.8°	72°				70,632		93%	220.80
20-24/20	22.5	7.3		452	8,000	5.326	2,407	1,200	72.0°	64.6°	0.0°	64.6°	72°				64,152		87%	313.20
25-29/25	27.5	9.0		411	8,000	5.326	2,189	1,200	72.0°	65.3°	0.0°	65.3°	72°				57,672		80%	237.60
30-34/30	32.5	11.1		897	8,000	5.326	4,777	1,200	72.0°	66.1°	0.0°	66.1°	72°				51,192		74%	424.62
35-39/34	37.5	12.8		808	8,000	5.326	4,303	1,200	72.0°	66.8°	0.0°	66.8°	72°				44,712		68%	306.00
40-44/38	42.5	15.1		722	8,000	5.326	3,845	1,200	72.0°	67.6°	0.0°	67.6°	72°				38,232		62%	212.35
45-49/42	47.5	17.0		512	8,000	5.326	2,727	1,200	72.0°	68.3°	0.0°	68.3°	72°				31,752		75%	152.06
50-54/47	52.5	19.7	25.8	659	8,000	5.326	3,510	1,200	59.9°	69.1°	0.0°	69.1°	72°	79,272	1,312	6.61	-		46%	
55-59/52	57.5	22.9	26.0	829	8,000	5.326	4,415	1,200	59.9°	69.8°	0.0°	69.8°	72°	85,752	1,931	7.15	-		50%	
60-64/56	62.5	25.7	26.2	1010	8,000	5.326	5,379	1,200	59.9°	70.6°	0.0°	70.6°	72°	92,232	2,722	7.69	-		54%	
65-69/60	67.5	28.7	26.4	812	8,000	5.326	4,324	1,200	59.9°	71.3°	0.0°	71.3°	72°	98,712	2,506	8.23			58%	
70-74/63	72.5	31.0	26.6	470	8,000	5.326	2,503	1,200	59.9°	72.1°	0.0°	72.1°	72°	105,192	1,647	8.77			62%	
75-79/66	77.5	32.4	26.8	436	8,000	5.326	2,322	1,200	59.9°	72.8°	0.0°	72.8°	72°	111,672	1,722	9.31			65%	
80-84/69	82.5	33.8	26.9	265	8,000	5.326	1,411	1,200	59.9°	73.6°	0.0°	73.6°	72°	118,152	1,172	9.85			69%	
85-89/72	87.5	36.5	27.1	106	8,000	5.326	565	1,200	59.9°	74.3°	0.0°	74.3°	72°	124,632	522	10.39			73%	
90-94/73	92.5	39.2	27.3	17	8,000	5.326	91	1,200	59.9°	75.1°	0.0°	75.1°	72°	131,112	93	10.93			77%	
				8,760.00			46,652								13,626	10.93				1,957

Title	**Control Upgrades**
ECM#	**7**
Project:	**SCI Houtzdale**
Site:	**SCI Houtzdale**
Unit #:	**AHU-25**

CONVERSION FACTORS				Design Conditions		
SLR	**67%**	Sensible	/latent	Supply CFM	3,770	
FANHP (F.L.)	**1.11**	HP@	3,770	Total Cooling	162,000	126,000
RAFHP (F.L.)	**0.44**	HP@	8,925	Sensible Cooling	107,897	
FMEFF	**84%**	Percent		Air Side TD	26.50	
CFMREF	**3,770**	CFM		Supply HP	2	
DREFF	**97%**	Percent	(@F.L.)	T.S.P.	1.5	
MINVOL	**1,508**	CFM	CFM	Supply Fan Eff	80%	
Conv. Fact.	6,344	60	0.24	Return CFM	8,925	
Off Coil Conditions	53	21.86	28	Return T.S.P.	0.3	
Btu/CCF	102,800	Heat Pipe Eff:	-	Return Fan HP	0.5	
kW/Ton	0.65			Return Fan Eff	80%	

Existing Operation

Bin DB temp/ WetBulb	Average Temp	enthapy OA btu/lb	enthapy Mixed Air btu/lb	Bin hrs	SA air flow CFM	Fan kW	Fan kWh	OA air flow CFM	Discharge Air Temp	MAT Air Temp	Heat Pipe Air Temp DT °F	MAT Air Temp w/ Hpipe	Space Temp setpoint	Total Cooling BTU/Hr	Total Cooling kWh/year	Total Cooling Demand Tons	Total Heating BTU/Hr	Total Reheat BTU/Hr	Run Fraction	Existing Heating CCF/year
-15 -11 / -12.6	-12.5	0.0		0	3,770	1.387	-	566	75.0°	59.3°	0.0°	59.3°	72°				63,822		100%	-
-10 -6 / -7.1	-7.5	0.0		0	3,770	1.387	-	566	75.0°	60.1°	0.0°	60.1°	72°				60,769		100%	-
-5 -1 / -2.9	-2.5	0.0		0	3,770	1.387	-	566	75.0°	60.8°	0.0°	60.8°	72°				57,715		100%	-
0-4/1	2.5	0.0		2	3,770	1.387	3	566	75.0°	61.6°	0.0°	61.6°	72°				54,661		43%	0.59
5-9/6	7.5	2.9		5	3,770	1.387	7	566	75.0°	62.3°	0.0°	62.3°	72°				51,608		41%	1.32
10-14/11	12.5	4.2		77	3,770	1.387	107	566	75.0°	63.1°	0.0°	63.1°	72°				48,554		39%	17.97
15-19/15	17.5	5.7		270	3,770	1.387	375	566	75.0°	63.8°	0.0°	63.8°	72°				45,500		36%	55.33
20-24/20	22.5	7.3		452	3,770	1.387	627	566	75.0°	64.6°	0.0°	64.6°	72°				42,446		34%	80.61
25-29/25	27.5	9.0		411	3,770	1.387	570	566	75.0°	65.3°	0.0°	65.3°	72°				39,393		31%	63.13
30-34/30	32.5	11.1		897	3,770	1.387	1,244	566	75.0°	66.1°	0.0°	66.1°	72°				36,339		29%	117.24
35-39/34	37.5	12.8		808	3,770	1.387	1,121	566	75.0°	66.8°	0.0°	66.8°	72°				33,285		26%	88.61
40-44/38	42.5	15.1		722	3,770	1.387	1,001	566	75.0°	67.6°	0.0°	67.6°	72°				30,232		24%	65.31
45-49/42	47.5	17.0		512	3,770	1.387	710	566	75.0°	68.3°	0.0°	68.3°	72°				27,178		30%	52.06
50-54/47	52.5	19.7	25.8	659	3,770	1.387	914	566	53.4°	69.1°	0.0°	69.1°	72°	67,522	1,005	5.63	-		42%	-
55-59/52	57.5	22.9	26.0	829	3,770	1.387	1,150	566	53.4°	69.8°	0.0°	69.8°	72°	70,624	1,383	5.89	-		44%	-
60-64/56	62.5	25.7	26.2	1010	3,770	1.387	1,401	566	53.4°	70.6°	0.0°	70.6°	72°	73,726	1,836	6.14	-		46%	-
65-69/60	67.5	28.7	26.4	812	3,770	1.387	1,126	566	53.4°	71.3°	0.0°	71.3°	72°	76,827	1,603	6.40			47%	-
70-74/63	72.5	31.0	26.6	470	3,770	1.387	652	566	53.4°	72.1°	0.0°	72.1°	72°	79,929	1,004	6.66			49%	-
75-79/66	77.5	32.4	26.8	436	3,770	1.387	605	566	53.4°	72.8°	0.0°	72.8°	72°	83,030	1,005	6.92			51%	-
80-84/69	82.5	33.8	26.9	265	3,770	1.387	368	566	53.4°	73.6°	0.0°	73.6°	72°	86,132	657	7.18			53%	-
85-89/72	87.5	36.5	27.1	106	3,770	1.387	147	566	53.4°	74.3°	0.0°	74.3°	72°	89,234	282	7.44			55%	-
90-94/73	92.5	39.2	27.3	17	3,770	1.387	24	566	53.4°	75.1°	0.0°	75.1°	72°	92,335	48	7.69			57%	
				8,760.00			12,151								8,822	7.69				542

CONVERSION FACTORS				Design Conditions		
	67%	Sensible	/latent	Supply CFM	3,770	
FANHP (F.L.)	**1.11**	HP@	3,770	Total Cooling	162,000	126,000
RAFHP (F.L.)	**0.44**	HP@	8,925	Sensible Cooling	107,897	
FMEFF	**84%**	Percent		Air Side TD	26.50	
CFMREF	**3,770**	CFM		Supply HP	1.50	
DREFF	**97%**	Percent	(@F.L.)	T.S.P.	1.5	
MINVOL	**1,508**	CFM	CFM	Supply Fan Eff	80%	
Conv. Fact.	6,344	60	0.24	Return CFM	8,925	
Off Coil Conditions	53	21.86	28	Return T.S.P.	0.3	
Gas (BTU/CCF):	102,800	Heat Pipe Eff:	-	Return Fan HP	0.5	
kW/ton=	0.65			Return Fan Eff	80%	

Proposed Operation

Bin DB temp/ WetBulb	Average Temp	enthapy OA btu/lb	enthapy Mixed Air btu/lb	Bin hrs	SA air flow CFM	Fan kW	Fan kWh	OA air flow CFM	Discharge Air Temp	MAT Air Temp	Heat Pipe Air Temp DT °F	MAT Air Temp w/ Hpipe	Space Temp setpoint	Total Cooling BTU/Hr	Total Cooling kWh/year	Total Cooling Demand Tons	Total Heating BTU/Hr	Total Reheat BTU/Hr	Run Fraction	Proposed Heating CCF/year
-15 -11 / -12.6	-12.5	0.0		0	3,770	1.387	-	566	75.0°	59.3°	0.0°	59.3°	72°				63,822		100%	-
-10 -6 / -7.1	-7.5	0.0		0	3,770	1.387	-	566	75.0°	60.1°	0.0°	60.1°	72°				60,769		100%	-
-5 -1 / -2.9	-2.5	0.0		0	3,770	1.387	-	566	75.0°	60.8°	0.0°	60.8°	72°				57,715		100%	-
0-4/1	2.5	0.0		2	3,770	1.387	3	566	75.0°	61.6°	0.0°	61.6°	72°				54,661		43%	0.59
5-9/6	7.5	2.9		5	3,770	1.387	7	566	74.0°	62.3°	0.0°	62.3°	72°				47,536		41%	1.21
10-14/11	12.5	4.2		77	3,770	1.387	107	566	73.0°	63.1°	0.0°	63.1°	72°				40,411		39%	14.95
15-19/15	17.5	5.7		270	3,770	1.387	375	566	72.0°	63.8°	0.0°	63.8°	72°				33,285		36%	40.47
20-24/20	22.5	7.3		452	3,770	1.387	627	566	72.0°	64.6°	0.0°	64.6°	72°				30,232		34%	57.41
25-29/25	27.5	9.0		411	3,770	1.387	570	566	72.0°	65.3°	0.0°	65.3°	72°				27,178		31%	43.55
30-34/30	32.5	11.1		897	3,770	1.387	1,244	566	72.0°	66.1°	0.0°	66.1°	72°				24,124		29%	77.83
35-39/34	37.5	12.8		808	3,770	1.387	1,121	566	72.0°	66.8°	0.0°	66.8°	72°				21,071		26%	56.09
40-44/38	42.5	15.1		722	3,770	1.387	1,001	566	72.0°	67.6°	0.0°	67.6°	72°				18,017		24%	38.92
45-49/42	47.5	17.0		512	3,770	1.387	710	566	72.0°	68.3°	0.0°	68.3°	72°				14,963		30%	28.66
50-54/47	52.5	19.7	25.8	659	3,770	1.387	914	566	53.4°	69.1°	0.0°	69.1°	72°	67,522	1,005	5.63	-		42%	-
55-59/52	57.5	22.9	26.0	829	3,770	1.387	1,150	566	53.4°	69.8°	0.0°	69.8°	72°	70,624	1,383	5.89	-		44%	-
60-64/56	62.5	25.7	26.2	1010	3,770	1.387	1,401	566	53.4°	70.6°	0.0°	70.6°	72°	73,726	1,836	6.14			46%	-
65-69/60	67.5	28.7	26.4	812	3,770	1.387	1,126	566	53.4°	71.3°	0.0°	71.3°	72°	76,827	1,603	6.40			47%	-
70-74/63	72.5	31.0	26.6	470	3,770	1.387	652	566	53.4°	72.1°	0.0°	72.1°	72°	79,929	1,004	6.66			49%	-
75-79/66	77.5	32.4	26.8	436	3,770	1.387	605	566	53.4°	72.8°	0.0°	72.8°	72°	83,030	1,005	6.92			51%	-
80-84/69	82.5	33.8	26.9	265	3,770	1.387	368	566	53.4°	73.6°	0.0°	73.6°	72°	86,132	657	7.18			53%	-
85-89/72	87.5	36.5	27.1	106	3,770	1.387	147	566	53.4°	74.3°	0.0°	74.3°	72°	89,234	282	7.44			55%	-
90-94/73	92.5	39.2	27.3	17	3,770	1.387	24	566	53.4°	75.1°	0.0°	75.1°	72°	92,335	48	7.69			57%	
				8,760.00			12,151								8,822	7.69				360

Title	**Control Upgrades**
ECM#	**7**
Project:	**SCI Houtzdale**
Site:	**SCI Houtzdale**
Unit #:	**AHU-26**

CONVERSION FACTORS				Design Conditions		
SLR	**68%**	Sensible	/latent	Supply CFM	16,300	
FANHP (F.L.)	**17.13**	HP@	16,300	Total Cooling	381,750	302,000
RAFHP (F.L.)	**5.04**	HP@	13,855	Sensible Cooling	260,539	
FMEFF	**88%**	Percent		Air Side TD	14.80	
CFMREF	**16,300**	CFM		Supply HP	3.0	
DREFF	**97%**	Percent	(@F.L.)	T.S.P.	4.0	
MINVOL	**6,520**	CFM	CFM	Supply Fan Eff	60%	
Conv. Fact.	6,344	60	0.24	Return CFM	13,855	
Off Coil Conditions	65	22.10		Return T.S.P.	1.5	
Btu/CCF	102,800	Heat EX Eff Wtr:		Return Fan HP	5.0	
kW/Ton	0.65	Heat EX Eff Smr:		Return Fan Eff	65%	

Existing Operation

Bin DB temp/ WetBulb	Average Temp	enthapy OA btu/lb	enthapy Mixed Air btu/lb	Bin hrs	SA air flow CFM	Fan kW	Fan kWh	OA air flow CFM	Discharge Air Temp	MAT Air Temp	Heat Pipe Air Temp DT °F	MAT Air Temp w/ Hpipe	Space Temp setpoint	Total Cooling BTU/Hr	Total Cooling kWh/year	Total Cooling Demand Tons	Total Heating BTU/Hr	Total Reheat BTU/Hr	Run Fraction	Existing Heating CCF/year
-15 -11 / -12.6	-12.5	0.0		0	16,300	18.901	-	2,445	75.0°	59.3°	0.0°	59.3°	72°				275,943		100%	-
-10 -6 / -7.1	-7.5	0.0		0	16,300	18.901	-	2,445	75.0°	60.1°	0.0°	60.1°	72°				262,740		100%	-
-5 -1 / -2.9	-2.5	0.0		0	16,300	18.901	-	2,445	75.0°	60.8°	0.0°	60.8°	72°				249,537		100%	-
0-4/1	2.5	0.0		2	16,300	18.901	38	2,445	75.0°	61.6°	0.0°	61.6°	72°				236,334		78%	4.61
5-9/6	7.5	2.9		5	16,300	18.271	91	2,445	75.0°	62.3°	0.0°	62.3°	72°				223,131		74%	10.28
10-14/11	12.5	4.2		77	15,485	17.684	1,362	2,323	75.0°	63.1°	0.0°	63.1°	72°				199,431		66%	126.47
15-19/15	17.5	5.7		270	13,855	16.440	4,439	2,078	75.0°	63.8°	0.0°	63.8°	72°				167,216		55%	311.76
20-24/20	22.5	7.3		452	13,040	15.804	7,144	1,956	75.0°	64.6°	0.0°	64.6°	72°				146,817		49%	402.34
25-29/25	27.5	9.0		411	12,225	15.156	6,229	1,834	75.0°	65.3°	0.0°	65.3°	72°				127,739		42%	276.95
30-34/30	32.5	11.1		897	11,410	14.491	12,998	1,712	75.0°	66.1°	0.0°	66.1°	72°				109,981		36%	448.06
35-39/34	37.5	12.8		808	9,780	13.109	10,592	1,467	75.0°	66.8°	0.0°	66.8°	72°				86,348		29%	248.78
40-44/38	42.5	15.1		722	8,965	12.387	8,943	1,345	75.0°	67.6°	0.0°	67.6°	72°				71,890		24%	154.09
45-49/42	47.5	17.0		512	7,335	11.644	5,962	1,100	75.0°	68.3°	0.0°	68.3°	72°				52,878		40%	135.06
50-54/47	52.5	19.7	25.8	659	6,520	10.874	7,166	978	65.3°	69.1°	0.0°	69.1°	72°		-	-	-		15%	-
55-59/52	57.5	22.9	26.0	829	7,335	11.644	9,653	1,100	65.3°	69.8°	0.0°	69.8°	72°	129,552	1,974	10.80	-		34%	-
60-64/56	62.5	25.7	26.2	1010	8,965	12.387	12,511	1,345	65.3°	70.6°	0.0°	70.6°	72°	165,717	3,936	13.81	-		43%	-
65-69/60	67.5	28.7	26.4	812	10,595	13.807	11,212	1,589	65.3°	71.3°	0.0°	71.3°	72°	204,564	4,821	17.05			54%	-
70-74/63	72.5	31.0	26.6	470	12,225	15.156	7,123	1,834	65.3°	72.1°	0.0°	72.1°	72°	246,093	4,039	20.51			64%	-
75-79/66	77.5	32.4	26.8	436	13,855	16.440	7,168	2,078	65.3°	72.8°	0.0°	72.8°	72°	290,304	5,214	24.19			76%	-
80-84/69	82.5	33.8	26.9	265	15,485	17.684	4,686	2,323	65.3°	73.6°	0.0°	73.6°	72°	337,197	4,275	28.10			88%	-
85-89/72	87.5	36.5	27.1	106	15,485	17.684	1,875	2,323	65.3°	74.3°	0.0°	74.3°	72°	349,937	1,842	29.16			92%	-
90-94/73	92.5	39.2	27.3	17	16,300	18.271	311	2,445	65.3°	75.1°	0.0°	75.1°	72°	381,765	352	31.81			100%	
				8,760.00			119,501								26,452	31.81				2,118
																				130

CONVERSION FACTORS				Design Conditions		
	68%	Sensible	/latent	Supply CFM	16,300	
FANHP (F.L.)	**17.13**	HP@	16,300	Total Cooling	381,750	302,000
RAFHP (F.L.)	**5.04**	HP@	13,855	Sensible Cooling	260,539	
FMEFF	**88%**	Percent		Air Side TD	14.80	
CFMREF	**16,300**	CFM		Supply HP	3.00	
DREFF	**97%**	Percent	(@F.L.)	T.S.P.	4.0	
MINVOL	**6,520**	CFM	CFM	Supply Fan Eff	60%	
Conv. Fact.	6,344	60	0.24	Return CFM	13,855	
Off Coil Conditions	65	22.10	28	Return T.S.P.	1.5	
Ht Pmp COP	102,800	Heat EX Eff Wtr:		Return Fan HP	5.0	
kW/Ton	0.65	Heat EX Eff Smr:		Return Fan Eff	65%	

Proposed Operation

Bin DB temp/ WetBulb	Average Temp	enthapy OA btu/lb	enthapy Mixed Air btu/lb	Bin hrs	SA air flow CFM	Fan kW	Fan kWh	OA air flow CFM	Discharge Air Temp	MAT Air Temp	Heat Pipe Air Temp DT °F	MAT Air Temp w/ Hpipe	Space Temp setpoint	Total Cooling BTU/Hr	Total Cooling kWh/year	Total Cooling Demand Tons	Total Heating BTU/Hr	Total Reheat BTU/Hr	Run Fraction	Proposed Heating CCF/year
-15 -11 / -12.6	-12.5	0.0		0	16,300	18.901	-	2,445	75.0°	59.3°	0.0°	59.3°	72°				275,943		100%	-
-10 -6 / -7.1	-7.5	0.0		0	16,300	18.901	-	2,445	75.0°	60.1°	0.0°	60.1°	72°				262,740		100%	-
-5 -1 / -2.9	-2.5	0.0		0	16,300	18.901	-	2,445	75.0°	60.8°	0.0°	60.8°	72°				249,537		100%	-
0-4/1	2.5	0.0		2	16,300	18.901	38	2,445	75.0°	61.6°	0.0°	61.6°	72°				236,334		78%	4
5-9/6	7.5	2.9		5	16,300	18.039	90	2,445	74.0°	62.3°	0.0°	62.3°	72°				205,527		74%	8
10-14/11	12.5	4.2		77	15,485	15.593	1,201	2,323	73.0°	63.1°	0.0°	63.1°	72°				165,984		66%	89
15-19/15	17.5	5.7		270	13,855	11.260	3,040	2,078	72.0°	63.8°	0.0°	63.8°	72°				122,326		55%	193
20-24/20	22.5	7.3		452	13,040	9.445	4,269	1,956	72.0°	64.6°	0.0°	64.6°	72°				104,568		49%	243
25-29/25	27.5	9.0		411	12,225	7.834	3,220	1,834	72.0°	65.3°	0.0°	65.3°	72°				88,130		42%	162
30-34/30	32.5	11.1		897	11,410	6.412	5,752	1,712	72.0°	66.1°	0.0°	66.1°	72°				73,013		36%	252
35-39/34	37.5	12.8		808	9,780	4.101	3,313	1,467	72.0°	66.8°	0.0°	66.8°	72°				54,660		29%	134
40-44/38	42.5	15.1		722	8,965	3.185	2,299	1,345	72.0°	67.6°	0.0°	67.6°	72°				42,844		24%	78
45-49/42	47.5	17.0		512	7,335	2.417	1,237	1,100	72.0°	68.3°	0.0°	68.3°	72°				29,113		40%	63
50-54/47	52.5	19.7	25.8	659	6,520	1.781	1,174	978	65.3°	69.1°	0.0°	69.1°	72°		-	-	-		15%	-
55-59/52	57.5	22.9	26.0	829	7,335	2.417	2,003	1,100	65.3°	69.8°	0.0°	69.8°	72°	129,552	1,974	10.80			34%	-
60-64/56	62.5	25.7	26.2	1010	8,965	3.185	3,217	1,345	65.3°	70.6°	0.0°	70.6°	72°	165,717	3,936	13.81			43%	-
65-69/60	67.5	28.7	26.4	812	10,595	5.169	4,198	1,589	65.3°	71.3°	0.0°	71.3°	72°	204,564	4,821	17.05			54%	
70-74/63	72.5	31.0	26.6	470	12,225	7.834	3,682	1,834	65.3°	72.1°	0.0°	72.1°	72°	246,093	4,039	20.51			64%	
75-79/66	77.5	32.4	26.8	436	13,855	11.260	4,910	2,078	65.3°	72.8°	0.0°	72.8°	72°	290,304	5,214	24.19			76%	
80-84/69	82.5	33.8	26.9	265	15,485	15.593	4,132	2,323	65.3°	73.6°	0.0°	73.6°	72°	337,197	4,275	28.10			88%	
85-89/72	87.5	36.5	27.1	106	15,485	15.593	1,653	2,323	65.3°	74.3°	0.0°	74.3°	72°	349,937	1,842	29.16			92%	
90-94/73	92.5	39.2	27.3	17	16,300	18.039	307	2,445	65.3°	75.1°	0.0°	75.1°	72°	381,765	352	31.81			100%	
				8,760.00			49,734								26,452	31.81				1,226
																				122.61
																				735.66

Title	**Control Upgrades**
ECM#	**7**
Project:	**SCI Houtzdale**
Site:	**SCI Houtzdale**
Unit #:	**AHU-27**

CONVERSION FACTORS				Design Conditions		
SLR	**60%**	Sensible	/latent	Supply CFM	9,640	
FANHP (F.L.)	**10.13**	HP@	9,640	Total Cooling	570,000	364,000
RAFHP (F.L.)	**3.23**	HP@	8,194	Sensible Cooling	343,570	
FMEFF	**91%**	Percent		Air Side TD	33.00	
CFMREF	**9,640**	CFM		Supply HP	15	
DREFF	**97%**	Percent	(@F.L.)	T.S.P.	4.0	
MINVOL	**3,856**	CFM	CFM	Supply Fan Eff	60%	
Conv. Fact.	6,344	60	0.24	Return CFM	8,194	
Off Coil Conditions	54	21.69	28	Return T.S.P.	1.5	
Gas (BTU/CCF):	102,800	Heat Pipe Eff:	-	Return Fan HP	2.5	
kW/ton=	0.65			Return Fan Eff	60%	

Existing Operation

Bin DB temp/ WetBulb	Average Temp	enthapy OA btu/lb	enthapy Mixed Air btu/lb	Bin hrs	SA air flow CFM	Fan kW	Fan kWh	OA air flow CFM	Discharge Air Temp	MAT Air Temp	Heat Pipe Air Temp DT °F	MAT Air Temp w/ Hpipe	Space Temp setpoint	Total Cooling BTU/Hr	Total Cooling kWh/year	Total Cooling Demand Tons	Total Heating BTU/Hr	Total Reheat BTU/Hr	Run Fraction	Existing Heating CCF/year
-15 -11 / -12.6	-12.5	0.0		0	9,640	11.131	-	2,305	75.0°	51.8°	0.0°	51.8°	72°				241,588		100%	-
-10 -6 / -7.1	-7.5	0.0		0	9,640	11.131	-	2,305	75.0°	53.0°	0.0°	53.0°	72°				229,141		100%	-
-5 -1 /-2.9	-2.5	0.0		0	9,640	11.131	-	2,305	75.0°	54.2°	0.0°	54.2°	72°				216,694		100%	-
0-4/1	2.5	0.0		2	9,640	11.131	22	2,305	75.0°	55.4°	0.0°	55.4°	72°				204,247		56%	2.86
5-9/6	7.5	2.9		5	9,640	11.131	56	2,305	75.0°	56.6°	0.0°	56.6°	72°				191,800		53%	6.30
10-14/11	12.5	4.2		77	9,158	10.773	830	2,190	75.0°	57.8°	0.0°	57.8°	72°				170,385		47%	76.59
15-19/15	17.5	5.7		270	8,194	10.015	2,704	1,959	75.0°	59.0°	0.0°	59.0°	72°				141,870		39%	186.19
20-24/20	22.5	7.3		452	7,712	9.628	4,352	1,844	75.0°	60.2°	0.0°	60.2°	72°				123,567		34%	236.46
25-29/25	27.5	9.0		411	7,712	9.628	3,957	1,844	75.0°	61.4°	0.0°	61.4°	72°				113,610		31%	181.75
30-34/30	32.5	11.1		897	6,748	8.828	7,919	1,614	75.0°	62.6°	0.0°	62.6°	72°				90,695		25%	252.80
35-39/34	37.5	12.8		808	5,784	7.986	6,453	1,383	75.0°	63.8°	0.0°	63.8°	72°				70,271		19%	136.70
40-44/38	42.5	15.1		722	5,302	7.546	5,448	1,268	75.0°	64.9°	0.0°	64.9°	72°				57,569		16%	81.98
45-49/42	47.5	17.0		512	4,338	7.094	3,632	1,037	75.0°	66.1°	0.0°	66.1°	72°				41,501		35%	92.75
50-54/47	52.5	19.7	25.4	659	3,856	6.625	4,366	922	53.6°	67.3°	0.0°	67.3°	72°	64,801	347	5.40	-		15%	-
55-59/52	57.5	22.9	25.7	829	4,338	7.094	5,881	1,037	53.6°	68.5°	0.0°	68.5°	72°	78,591	487	6.55	-		14%	-
60-64/56	62.5	25.7	26.0	1010	5,302	7.546	7,622	1,268	53.6°	69.7°	0.0°	69.7°	72°	103,009	1,018	8.58	-		18%	-
65-69/60	67.5	28.7	26.3	812	6,266	8.412	6,830	1,498	53.6°	70.9°	0.0°	70.9°	72°	129,955	1,303	10.83			23%	-
70-74/63	72.5	31.0	26.6	470	7,712	9.628	4,525	1,844	53.6°	72.1°	0.0°	72.1°	72°	170,058	1,292	14.17			30%	-
75-79/66	77.5	32.4	26.9	436	7,712	9.628	4,198	1,844	53.6°	73.3°	0.0°	73.3°	72°	180,172	1,345	15.01			32%	-
80-84/69	82.5	33.8	27.2	265	8,676	10.394	2,755	2,075	53.6°	74.5°	0.0°	74.5°	72°	214,072	1,154	17.84			38%	-
85-89/72	87.5	36.5	27.5	106	9,158	10.773	1,142	2,190	53.6°	75.7°	0.0°	75.7°	72°	237,975	570	19.83			42%	-
90-94/73	92.5	39.2	27.8	17	9,640	11.131	189	2,305	53.6°	76.9°	0.0°	76.9°	72°	263,143	112	21.93			46%	
				8,760.00			72,880								7,628	21.93				1,254

CONVERSION FACTORS				Design Conditions		
	60%	Sensible	/latent	Supply CFM	9,640	
FANHP (F.L.)	**10.13**	HP@	9,640	Total Cooling	570,000	364,000
RAFHP (F.L.)	**3.23**	HP@	8,194	Sensible Cooling	343,570	
FMEFF	**91%**	Percent		Air Side TD	33.00	
CFMREF	**9,640**	CFM		Supply HP	15.00	
DREFF	**97%**	Percent	(@F.L.)	T.S.P.	4.0	
MINVOL	**3,856**	CFM	CFM	Supply Fan Eff	60%	
Conv. Fact.	6,344	60	0.24	Return CFM	8,194	
Off Coil Conditions	54	21.69	28	Return T.S.P.	1.5	
Gas (BTU/CCF):	102,800	Heat Pipe Eff:	-	Return Fan HP	2.5	
kW/ton=	0.65			Return Fan Eff	60%	

Proposed Operation

Bin DB temp/ WetBulb	Average Temp	enthapy OA btu/lb	enthapy Mixed Air btu/lb	Bin hrs	SA air flow CFM	Fan kW	Fan kWh	OA air flow CFM	Discharge Air Temp	MAT Air Temp	Heat Pipe Air Temp DT °F	MAT Air Temp w/ Hpipe	Space Temp setpoint	Total Cooling BTU/Hr	Total Cooling kWh/year	Total Cooling Demand Tons	Total Heating BTU/Hr	Total Reheat BTU/Hr	Run Fraction	Proposed Heating CCF/year
-15 -11 / -12.6	-12.5	0.0		0	9,640	22.121	-	2,305	75.0°	51.8°	0.0°	51.8°	72°				241,588		100%	-
-10 -6 / -7.1	-7.5	0.0		0	9,640	22.121	-	2,305	75.0°	53.0°	0.0°	53.0°	72°				229,141		100%	-
-5 -1 /-2.9	-2.5	0.0		0	9,640	22.121	-	2,305	75.0°	54.2°	0.0°	54.2°	72°				216,694		100%	-
0-4/1	2.5	0.0		2	9,640	22.121	44	2,305	75.0°	55.4°	0.0°	55.4°	72°				204,247		56%	2.86
5-9/6	7.5	2.9		5	9,640	22.121	111	2,305	74.0°	56.6°	0.0°	56.6°	72°				181,389		53%	5.96
10-14/11	12.5	4.2		77	9,158	20.273	1,561	2,190	73.0°	57.8°	0.0°	57.8°	72°				150,604		47%	67.70
15-19/15	17.5	5.7		270	8,194	16.875	4,556	1,959	72.0°	59.0°	0.0°	59.0°	72°				115,321		39%	151.35
20-24/20	22.5	7.3		452	7,712	15.382	6,953	1,844	72.0°	60.2°	0.0°	60.2°	72°				98,580		34%	188.64
25-29/25	27.5	9.0		411	7,712	15.382	6,322	1,844	72.0°	61.4°	0.0°	61.4°	72°				88,623		31%	141.78
30-34/30	32.5	11.1		897	6,748	12.734	11,423	1,614	72.0°	62.6°	0.0°	62.6°	72°				68,832		25%	191.86
35-39/34	37.5	12.8		808	5,784	10.484	8,471	1,383	72.0°	63.8°	0.0°	63.8°	72°				51,531		19%	100.24
40-44/38	42.5	15.1		722	5,302	9.486	6,849	1,268	72.0°	64.9°	0.0°	64.9°	72°				40,391		16%	57.52
45-49/42	47.5	17.0		512	4,338	8.566	4,386	1,037	72.0°	66.1°	0.0°	66.1°	72°				27,446		35%	61.34
50-54/47	52.5	19.7	25.4	659	3,856	7.710	5,081	922	53.6°	67.3°	0.0°	67.3°	72°	64,801	347	5.40			15%	-
55-59/52	57.5	22.9	25.7	829	4,338	8.566	7,101	1,037	53.6°	68.5°	0.0°	68.5°	72°	78,591	487	6.55	-		14%	-
60-64/56	62.5	25.7	26.0	1010	5,302	9.486	9,581	1,268	53.6°	69.7°	0.0°	69.7°	72°	103,009	1,018	8.58	-		18%	-
65-69/60	67.5	28.7	26.3	812	6,266	11.561	9,387	1,498	53.6°	70.9°	0.0°	70.9°	72°	129,955	1,303	10.83	-		23%	-
70-74/63	72.5	31.0	26.6	470	7,712	15.382	7,230	1,844	53.6°	72.1°	0.0°	72.1°	72°	170,058	1,292	14.17			30%	-
75-79/66	77.5	32.4	26.9	436	7,712	15.382	6,707	1,844	53.6°	73.3°	0.0°	73.3°	72°	180,172	1,345	15.01			32%	-
80-84/69	82.5	33.8	27.2	265	8,676	18.491	4,900	2,075	53.6°	74.5°	0.0°	74.5°	72°	214,072	1,154	17.84			38%	-
85-89/72	87.5	36.5	27.5	106	9,158	20.273	2,149	2,190	53.6°	75.7°	0.0°	75.7°	72°	237,975	570	19.83			42%	-
90-94/73	92.5	39.2	27.8	17	9,640	22.121	376	2,305	53.6°	76.9°	0.0°	76.9°	72°	263,143	112	21.93			46%	
				8,760.00			103,188								7,628	21.93				969

Title	**Control Upgrades**
ECM#	**7**
Project:	**SCI Houtzdale**
Site:	**SCI Houtzdale**
Unit #:	**AHU-28**

CONVERSION FACTORS				Design Conditions		
SLR	**119%**	Sensible	/latent	Supply CFM	8,400	
FANHP (F.L.)	**7.72**	HP@	8,400	Total Cooling	251,250	664,000
RAFHP (F.L.)	-	HP@	0	Sensible Cooling	299,376	
FMEFF	**90%**	Percent		Air Side TD	33.00	
CFMREF	**8,400**	CFM		Supply HP	10	
DREFF	**97%**	Percent	(@F.L.)	T.S.P.	3.5	
MINVOL	**3,360**	CFM	CFM	Supply Fan Eff	60%	
Conv. Fact.	6,344	60	0.24	Return CFM	-	
Off Coil Conditions	54	22.52		Return T.S.P.		
Gas (BTU/CCF):	102,800	Heat Pipe Eff:	-	Return Fan HP	3.0	
kW/ton=	0.65			Return Fan Eff	60%	

Existing Operation

Bin DB temp/ WetBulb	Average Temp	enthapy OA btu/lb	enthapy Mixed Air btu/lb	Bin hrs	SA air flow CFM	Fan kW	Fan kWh	OA air flow CFM	Discharge Air Temp	MAT Air Temp	Heat Pipe Air Temp DT °F	MAT Air Temp w/ Hpipe	Space Temp setpoint	Total Cooling BTU/Hr	Total Cooling kWh/year	Total Cooling Demand Tons	Total Heating BTU/Hr	Run Fraction	Existing Heating CCF/year
-15 -11 / -12.6	-12.5	0.0		0	8,400	6.438	-	8,400	75.0°	-12.5°	0.0°	-12.5°	72°				664,000	100%	-
-10 -6 /-7.1	-7.5	0.0		0	8,400	6.438	-	8,400	75.0°	-7.5°	0.0°	-7.5°	72°				664,000	100%	-
-5 -1 /-2.9	-2.5	0.0		0	8,400	6.438	-	8,400	75.0°	-2.5°	0.0°	-2.5°	72°				664,000	100%	-
0-4/1	2.5	0.0		2	8,400	6.438	13	8,400	75.0°	2.5°	0.0°	2.5°	72°				657,720	99%	16.25
5-9/6	7.5	2.9		5	8,400	6.438	32	8,400	75.0°	7.5°	0.0°	7.5°	72°				612,360	92%	35.22
10-14/11	12.5	4.2		77	8,400	6.438	496	8,400	75.0°	12.5°	0.0°	12.5°	72°				567,000	85%	464.94
15-19/15	17.5	5.7		270	8,400	6.438	1,738	8,400	75.0°	17.5°	0.0°	17.5°	72°				521,640	79%	1,379.91
20-24/20	22.5	7.3		452	8,400	6.438	2,910	8,400	75.0°	22.5°	0.0°	22.5°	72°				476,280	72%	1,925.78
25-29/25	27.5	9.0		411	8,400	6.438	2,646	8,400	75.0°	27.5°	0.0°	27.5°	72°				430,920	65%	1,433.44
30-34/30	32.5	11.1		897	8,400	6.438	5,775	8,400	75.0°	32.5°	0.0°	32.5°	72°				385,560	58%	2,504.50
35-39/34	37.5	12.8		808	8,400	6.438	5,202	8,400	75.0°	37.5°	0.0°	37.5°	72°				340,200	51%	1,756.40
40-44/38	42.5	15.1		722	8,400	6.438	4,648	8,400	75.0°	42.5°	0.0°	42.5°	72°		-	-	294,840	44%	1,178.84
45-49/42	47.5	17.0		512	8,400	6.438	3,296	8,400	75.0°	47.5°	0.0°	47.5°	72°		-	-	249,480	35%	557.55
50-54/47	52.5	19.7	21.8	659	8,400	6.438	4,243	8,400	75.0°	52.5°	0.0°	52.5°	72°				204,120	15%	251.64
55-59/52	57.5	22.9	23.0	829	8,400	6.438	5,337	8,400	54.0°	57.5°	0.0°	57.5°	72°	31,752	180	2.65		13%	-
60-64/56	62.5	25.7	24.2	1010	8,400	6.438	6,502	8,400	54.0°	62.5°	0.0°	62.5°	72°	120,280	3,150	10.02		48%	-
65-69/60	67.5	28.7	25.5	812	8,400	6.438	5,228	8,400	54.0°	67.5°	0.0°	67.5°	72°	233,680	9,559	19.47		93%	-
70-74/63	72.5	31.0	26.7	470	8,400	6.438	3,026	8,400	54.0°	72.5°	0.0°	72.5°	72°	320,620	10,416	26.72		128%	-
75-79/66	77.5	32.4	27.9	436	8,400	6.438	2,807	8,400	54.0°	77.5°	0.0°	77.5°	72°	373,540	13,116	31.13		149%	-
80-84/69	82.5	33.8	29.1	265	8,400	6.438	1,706	8,400	54.0°	82.5°	0.0°	82.5°	72°	426,460	10,390	35.54		170%	-
85-89/72	87.5	36.5	30.3	106	8,400	6.438	682	8,400	54.0°	87.5°	0.0°	87.5°	72°	528,520	6,383	44.04		210%	-
90-94/73	92.5	39.2	31.6	17	8,400	6.438	109	8,400	54.0°	92.5°	0.0°	92.5°	72°	630,580	1,457	52.55		251%	
				8,760.00			56,397								54,652	52.55			11,504

CONVERSION FACTORS				Design Conditions		
	119%	Sensible	/latent	Supply CFM	8,400	
FANHP (F.L.)	**7.72**	HP@	8,400	Total Cooling	251,250	664,000
RAFHP (F.L.)	-	HP@	0	Sensible Cooling	299,376	
FMEFF	**90%**	Percent		Air Side TD	33.00	
CFMREF	**8,400**	CFM		Supply HP	10.00	
DREFF	**97%**	Percent	(@F.L.)	T.S.P.	3.5	
MINVOL	**3,360**	CFM	CFM	Supply Fan Eff	65%	
Conv. Fact.	6,344	60	0.24	Return CFM	-	
Off Coil Conditions	54	22.52	28	Return T.S.P.		
Gas (BTU/CCF):	102,800	Heat Pipe Eff:	-	Return Fan HP	-	
kW/ton=	0.65			Return Fan Eff	60%	

Proposed Operation

Bin DB temp/ WetBulb	Average Temp	enthapy OA btu/lb	enthapy Mixed Air btu/lb	Bin hrs	SA air flow CFM	Fan kW	Fan kWh	OA air flow CFM	Discharge Air Temp	MAT Air Temp	Heat Pipe Air Temp DT °F	MAT Air Temp w/ Hpipe	Space Temp setpoint	Total Cooling BTU/Hr	Total Cooling kWh/year	Total Cooling Demand Tons	Total Heating BTU/Hr	Run Fraction	Proposed Heating CCF/year
-15 -11 / -12.6	-12.5	0.0		0	8,400	6.438	-	8,400	75.0°	-12.5°	0.0°	-12.5°	72°				664,000	100%	-
-10 -6 /-7.1	-7.5	0.0		0	8,400	6.438	-	8,400	75.0°	-7.5°	0.0°	-7.5°	72°				664,000	100%	-
-5 -1 /-2.9	-2.5	0.0		0	8,400	6.438	-	8,400	75.0°	-2.5°	0.0°	-2.5°	72°				664,000	100%	-
0-4/1	2.5	0.0		2	8,400	6.438	13	8,400	75.0°	2.5°	0.0°	2.5°	72°				657,720	99%	16.25
5-9/6	7.5	2.9		4	8,400	6.438	26	8,400	74.0°	7.5°	0.0°	7.5°	72°				603,288	92%	27.75
10-14/11	12.5	4.2		53	8,400	6.438	341	8,400	73.0°	12.5°	0.0°	12.5°	72°				548,856	85%	309.79
15-19/15	17.5	5.7		210	8,400	6.438	1,352	8,400	72.0°	17.5°	0.0°	17.5°	72°				494,424	79%	1,017.26
20-24/20	22.5	7.3		370	8,400	6.438	2,382	8,400	72.0°	22.5°	0.0°	22.5°	72°				449,064	72%	1,486.33
25-29/25	27.5	9.0		337	8,400	6.438	2,170	8,400	72.0°	27.5°	0.0°	27.5°	72°				403,704	65%	1,101.12
30-34/30	32.5	11.1		719	8,400	6.438	4,629	8,400	72.0°	32.5°	0.0°	32.5°	72°				358,344	58%	1,865.80
35-39/34	37.5	12.8		662	8,400	6.438	4,262	8,400	72.0°	37.5°	0.0°	37.5°	72°				312,984	51%	1,323.91
40-44/38	42.5	15.1		577	8,400	6.438	3,715	8,400	72.0°	42.5°	0.0°	42.5°	72°				267,624	44%	855.13
45-49/42	47.5	17.0		426	8,400	6.438	2,743	8,400	72.0°	47.5°	0.0°	47.5°	72°				222,264	35%	413.29
50-54/47	52.5	19.7	21.8	531	8,400	6.438	3,419	8,400	54.0°	52.5°	0.0°	52.5°	72°		-	-	13,608	15%	13.52
55-59/52	57.5	22.9	23.0	642	8,400	6.438	4,133	8,400	54.0°	57.5°	0.0°	57.5°	72°	31,752	140	2.65		13%	-
60-64/56	62.5	25.7	24.2	827	8,400	6.438	5,324	8,400	54.0°	62.5°	0.0°	62.5°	72°	120,280	2,579	10.02		48%	-
65-69/60	67.5	28.7	25.5	682	8,400	6.438	4,391	8,400	54.0°	67.5°	0.0°	67.5°	72°	233,680	8,029	19.47		93%	-
70-74/63	72.5	31.0	26.7	448	8,400	6.438	2,884	8,400	54.0°	72.5°	0.0°	72.5°	72°	320,620	9,929	26.72		128%	-
75-79/66	77.5	32.4	27.9	422	8,400	6.438	2,717	8,400	54.0°	77.5°	0.0°	77.5°	72°	373,540	12,694	31.13		149%	-
80-84/69	82.5	33.8	29.1	265	8,400	6.438	1,706	8,400	54.0°	82.5°	0.0°	82.5°	72°	426,460	10,390	35.54		170%	-
85-89/72	87.5	36.5	30.3	106	8,400	6.438	682	8,400	54.0°	87.5°	0.0°	87.5°	72°	528,520	6,383	44.04		210%	-
90-94/73	92.5	39.2	31.6	17	8,400	6.438	109	8,400	54.0°	92.5°	0.0°	92.5°	72°	630,580	1,457	52.55		251%	
				7,300.00			46,997								51,602	52.55			8,430

Title	**Control Upgrades**
ECM#	**7**
Project:	**SCI Houtzdale**
Site:	**SCI Houtzdale**
Unit #:	**AHU-29**

CONVERSION FACTORS				Design Conditions		
SLR	**31%**	Sensible	/latent	Supply CFM	4,820	
FANHP (F.L.)	**5.07**	HP@	4,820	Total Cooling	570,000	382,000
RAFHP (F.L.)	-	HP@	0	Sensible Cooling	179,073	
FMEFF	**90%**	Percent		Air Side TD	34.40	
CFMREF	**4,820**	CFM		Supply HP	7.5	
DREFF	**97%**	Percent	(@F.L.)	T.S.P.	4.0	
MINVOL	**1,928**	CFM	CFM	Supply Fan Eff	60%	
Conv. Fact.	6,344	60	0.24	Return CFM	-	
Off Coil Conditions	53	21.69		Return T.S.P.	-	
Gas (BTU/CCF):	102,800	Heat Pipe Eff:	-	Return Fan HP	-	
kW/ton=	0.65			Return Fan Eff	60%	

Existing Operation

Bin DB temp/ WetBulb	Average Temp	enthapy OA btu/lb	enthapy Mixed Air btu/lb	Bin hrs	SA air flow CFM	Fan kW	Fan kWh	OA air flow CFM	Discharge Air Temp	MAT Air Temp	Heat Pipe Air Temp DT °F	MAT Air Temp w/ Hpipe	Space Temp setpoint	Total Cooling BTU/Hr	Total Cooling kWh/year	Total Cooling Demand Tons	Total Heating BTU/Hr	Total Reheat BTU/Hr	Run Fraction	Existing Heating CCF/year
-15 -11 / -12.6	-12.5	0.0		0	4,820	4.222	-	4,820	75.0°	-12.5°	0.0°	-12.5°	72°				382,000		100%	-
-10 -6 / -7.1	-7.5	0.0		0	4,820	4.222	-	4,820	75.0°	-7.5°	0.0°	-7.5°	72°				382,000		100%	-
-5 -1 / -2.9	-2.5	0.0		0	4,820	4.222	-	4,820	75.0°	-2.5°	0.0°	-2.5°	72°				382,000		100%	-
0-4/1	2.5	0.0		2	4,820	4.222	8	4,820	75.0°	2.5°	0.0°	2.5°	72°				377,406		99%	9.30
5-9/6	7.5	2.9		5	4,820	4.222	21	4,820	75.0°	7.5°	0.0°	7.5°	72°				351,378		92%	20.15
10-14/11	12.5	4.2		77	4,820	4.222	325	4,820	75.0°	12.5°	0.0°	12.5°	72°				325,350		85%	266.10
15-19/15	17.5	5.7		270	4,820	4.222	1,140	4,820	75.0°	17.5°	0.0°	17.5°	72°				299,322		78%	789.75
20-24/20	22.5	7.3		452	4,820	4.222	1,908	4,820	75.0°	22.5°	0.0°	22.5°	72°				273,294		72%	1,102.17
25-29/25	27.5	9.0		411	4,820	4.222	1,735	4,820	75.0°	27.5°	0.0°	27.5°	72°				247,266		65%	820.39
30-34/30	32.5	11.1		897	4,820	4.222	3,787	4,820	75.0°	32.5°	0.0°	32.5°	72°				221,238		58%	1,433.38
35-39/34	37.5	12.8		808	4,820	4.222	3,411	4,820	75.0°	37.5°	0.0°	37.5°	72°				195,210		51%	1,005.23
40-44/38	42.5	15.1		722	4,820	4.222	3,048	4,820	75.0°	42.5°	0.0°	42.5°	72°		-	-	169,182		44%	674.67
45-49/42	47.5	17.0		512	4,820	4.222	2,162	4,820	75.0°	47.5°	0.0°	47.5°	72°		-	-	143,154		35%	319.93
50-54/47	52.5	19.7	21.8	659	4,820	4.222	2,782	4,820	52.6°	52.5°	0.0°	52.5°	72°		-	-			15%	-
55-59/52	57.5	22.9	23.0	829	4,820	4.222	3,500	4,820	52.6°	57.5°	0.0°	57.5°	72°	26,223	54	2.19	-		5%	-
60-64/56	62.5	25.7	24.2	1010	4,820	4.222	4,264	4,820	52.6°	62.5°	0.0°	62.5°	72°	86,955	726	7.25	-		15%	-
65-69/60	67.5	28.7	25.5	812	4,820	4.222	3,428	4,820	52.6°	67.5°	0.0°	67.5°	72°	152,025	1,783	12.67			27%	-
70-74/63	72.5	31.0	26.7	470	4,820	4.222	1,984	4,820	52.6°	72.5°	0.0°	72.5°	72°	201,912	1,821	16.83			35%	-
75-79/66	77.5	32.4	27.9	436	4,820	4.222	1,841	4,820	52.6°	77.5°	0.0°	77.5°	72°	232,278	2,235	19.36			41%	-
80-84/69	82.5	33.8	29.1	265	4,820	4.222	1,119	4,820	52.6°	82.5°	0.0°	82.5°	72°	262,644	1,737	21.89			46%	-
85-89/72	87.5	36.5	30.3	106	4,820	4.222	448	4,820	52.6°	87.5°	0.0°	87.5°	72°	321,207	1,039	26.77			56%	-
90-94/73	92.5	39.2	31.6	17	4,820	4.222	72	4,820	52.6°	92.5°	0.0°	92.5°	72°	379,770	233	31.65			67%	
				8,760.00			36,984								9,629	31.65				6,441

CONVERSION FACTORS				Design Conditions		
	31%	Sensible	/latent	Supply CFM	4,820	
FANHP (F.L.)	**5.07**	HP@	4,820	Total Cooling	570,000	382,000
RAFHP (F.L.)	-	HP@	0	Sensible Cooling	179,073	
FMEFF	**90%**	Percent		Air Side TD	34.40	
CFMREF	**4,820**	CFM		Supply HP	7.50	
DREFF	**97%**	Percent	(@F.L.)	T.S.P.	4.0	
MINVOL	**1,928**	CFM	CFM	Supply Fan Eff	65%	
Conv. Fact.	6,344	60	0.24	Return CFM	-	
Off Coil Conditions	53	21.69	28	Return T.S.P.	-	
Gas (BTU/CCF):	102,800	Heat Pipe Eff:	-	Return Fan HP	-	
kW/ton=	0.65			Return Fan Eff	60%	

Proposed Operation

Bin DB temp/ WetBulb	Average Temp	enthapy OA btu/lb	enthapy Mixed Air btu/lb	Bin hrs	SA air flow CFM	Fan kW	Fan kWh	OA air flow CFM	Discharge Air Temp	MAT Air Temp	Heat Pipe Air Temp DT °F	MAT Air Temp w/ Hpipe	Space Temp setpoint	Total Cooling BTU/Hr	Total Cooling kWh/year	Total Cooling Demand Tons	Total Heating BTU/Hr	Total Reheat BTU/Hr	Run Fraction	Proposed Heating CCF/year
-15 -11 / -12.6	-12.5	0.0		0	4,820	4.222	-	4,820	75.0°	-12.5°	0.0°	-12.5°	72°				382,000		100%	-
-10 -6 / -7.1	-7.5	0.0		0	4,820	4.222	-	4,820	75.0°	-7.5°	0.0°	-7.5°	72°				382,000		100%	-
-5 -1 / -2.9	-2.5	0.0		0	4,820	4.222	-	4,820	75.0°	-2.5°	0.0°	-2.5°	72°				382,000		100%	-
0-4/1	2.5	0.0		2	4,820	4.222	8	4,820	75.0°	2.5°	0.0°	2.5°	72°				377,406		99%	9.30
5-9/6	7.5	2.9		4	4,820	4.222	17	4,820	74.0°	7.5°	0.0°	7.5°	72°				346,172		92%	15.88
10-14/11	12.5	4.2		53	4,820	4.222	224	4,820	73.0°	12.5°	0.0°	12.5°	72°				314,939		85%	177.30
15-19/15	17.5	5.7		210	4,820	4.222	887	4,820	72.0°	17.5°	0.0°	17.5°	72°				283,705		78%	582.20
20-24/20	22.5	7.3		370	4,820	4.222	1,562	4,820	72.0°	22.5°	0.0°	22.5°	72°				257,677		72%	850.66
25-29/25	27.5	9.0		337	4,820	4.222	1,423	4,820	72.0°	27.5°	0.0°	27.5°	72°				231,649		65%	630.19
30-34/30	32.5	11.1		719	4,820	4.222	3,036	4,820	72.0°	32.5°	0.0°	32.5°	72°				205,621		58%	1,067.84
35-39/34	37.5	12.8		662	4,820	4.222	2,795	4,820	72.0°	37.5°	0.0°	37.5°	72°				179,593		51%	757.70
40-44/38	42.5	15.1		577	4,820	4.222	2,436	4,820	72.0°	42.5°	0.0°	42.5°	72°				153,565		44%	489.41
45-49/42	47.5	17.0		426	4,820	4.222	1,799	4,820	72.0°	47.5°	0.0°	47.5°	72°				127,537		35%	237.15
50-54/47	52.5	19.7	21.8	531	4,820	4.222	2,242	4,820	52.6°	52.5°	0.0°	52.5°	72°		-	-			15%	-
55-59/52	57.5	22.9	23.0	642	4,820	4.222	2,710	4,820	52.6°	57.5°	0.0°	57.5°	72°	26,223	42	2.19			5%	-
60-64/56	62.5	25.7	24.2	827	4,820	4.222	3,492	4,820	52.6°	62.5°	0.0°	62.5°	72°	86,955	594	7.25			15%	-
65-69/60	67.5	28.7	25.5	682	4,820	4.222	2,879	4,820	52.6°	67.5°	0.0°	67.5°	72°	152,025	1,498	12.67			27%	-
70-74/63	72.5	31.0	26.7	448	4,820	4.222	1,891	4,820	52.6°	72.5°	0.0°	72.5°	72°	201,912	1,736	16.83			35%	-
75-79/66	77.5	32.4	27.9	422	4,820	4.222	1,782	4,820	52.6°	77.5°	0.0°	77.5°	72°	232,278	2,164	19.36			41%	-
80-84/69	82.5	33.8	29.1	265	4,820	4.222	1,119	4,820	52.6°	82.5°	0.0°	82.5°	72°	262,644	1,737	21.89			46%	-
85-89/72	87.5	36.5	30.3	106	4,820	4.222	448	4,820	52.6°	87.5°	0.0°	87.5°	72°	321,207	1,039	26.77			56%	-
90-94/73	92.5	39.2	31.6	17	4,820	4.222	72	4,820	52.6°	92.5°	0.0°	92.5°	72°	379,770	233	31.65			67%	
				7,300.00			30,820								9,043	31.65				4,818

Title	**Control Upgrades**
ECM#	**7**
Project:	**SCI Houtzdale**
Site:	**SCI Houtzdale**
Unit #:	**AHU-30**

CONVERSION FACTORS				Design Conditions		
SLR	**46%**	Sensible	/latent	Supply CFM	8,400	
FANHP (F.L.)	**7.72**	HP@	8,400	Total Cooling	506,250	665,000
RAFHP (F.L.)	**-**	HP@	0	Sensible Cooling	230,429	
FMEFF	**90%**	Percent		Air Side TD	25.40	
CFMREF	**8,400**	CFM		Supply HP	10.0	
DREFF	**97%**	Percent	(@F.L.)	T.S.P.	3.5	
MINVOL	**3,360**	CFM	CFM	Supply Fan Eff	60%	
Conv. Fact.	6,344	60	0.24	Return CFM	-	
Off Coil Conditions	52	21.29		Return T.S.P.	-	
Gas (BTU/CCF):	102,800	Heat Pipe Eff:	-	Return Fan HP	-	
kW/ton=	0.65			Return Fan Eff	60%	

Existing Operation

Bin DB temp/ WetBulb	Average Temp	enthapy OA btu/lb	enthapy Mixed Air btu/lb	Bin hrs	SA air flow CFM	Fan kW	Fan kWh	OA air flow CFM	Discharge Air Temp	MAT Air Temp	Heat Pipe Air Temp DT °F	MAT Air Temp w/ Hpipe	Space Temp setpoint	Total Cooling BTU/Hr	Total Cooling kWh/year	Total Cooling Demand Tons	Total Heating BTU/Hr	Total Reheat BTU/Hr	Run Fraction	Existing Heating CCF/year
-15 -11 / -12.6	-12.5	0.0		0	8,400	6.438	-	8,400	75.0°	-12.5°	0.0°	-12.5°	72°				665,000		100%	-
-10 -6 / -7.1	-7.5	0.0		0	8,400	6.438	-	8,400	75.0°	-7.5°	0.0°	-7.5°	72°				665,000		100%	-
-5 -1 /-2.9	-2.5	0.0		0	8,400	6.438	-	8,400	75.0°	-2.5°	0.0°	-2.5°	72°				665,000		100%	-
0-4/1	2.5	0.0		2	8,400	6.438	13	8,400	75.0°	2.5°	0.0°	2.5°	72°				657,720		99%	16.23
5-9/6	7.5	2.9		5	8,400	6.438	32	8,400	75.0°	7.5°	0.0°	7.5°	72°				612,360		92%	35.16
10-14/11	12.5	4.2		77	8,400	6.438	496	8,400	75.0°	12.5°	0.0°	12.5°	72°				567,000		85%	464.25
15-19/15	17.5	5.7		270	8,400	6.438	1,738	8,400	75.0°	17.5°	0.0°	17.5°	72°				521,640		78%	1,377.83
20-24/20	22.5	7.3		452	8,400	6.438	2,910	8,400	75.0°	22.5°	0.0°	22.5°	72°				476,280		72%	1,922.89
25-29/25	27.5	9.0		411	8,400	6.438	2,646	8,400	75.0°	27.5°	0.0°	27.5°	72°				430,920		65%	1,431.28
30-34/30	32.5	11.1		897	8,400	6.438	5,775	8,400	75.0°	32.5°	0.0°	32.5°	72°				385,560		58%	2,500.73
35-39/34	37.5	12.8		808	8,400	6.438	5,202	8,400	75.0°	37.5°	0.0°	37.5°	72°				340,200		51%	1,753.76
40-44/38	42.5	15.1		722	8,400	6.438	4,648	8,400	75.0°	42.5°	0.0°	42.5°	72°		-	-	294,840		44%	1,177.07
45-49/42	47.5	17.0		512	8,400	6.438	3,296	8,400	75.0°	47.5°	0.0°	47.5°	72°		-	-	249,480		35%	557.55
50-54/47	52.5	19.7	21.8	659	8,400	6.438	4,243	8,400	51.9°	52.5°	0.0°	52.5°	72°		-	-	-		15%	-
55-59/52	57.5	22.9	23.0	829	8,400	6.438	5,337	8,400	51.9°	57.5°	0.0°	57.5°	72°	61,047	331	5.09	-		12%	-
60-64/56	62.5	25.7	24.2	1010	8,400	6.438	6,502	8,400	51.9°	62.5°	0.0°	62.5°	72°	166,887	3,010	13.91	-		33%	-
65-69/60	67.5	28.7	25.5	812	8,400	6.438	5,228	8,400	51.9°	67.5°	0.0°	67.5°	72°	280,287	6,825	23.36			55%	-
70-74/63	72.5	31.0	26.7	470	8,400	6.438	3,026	8,400	51.9°	72.5°	0.0°	72.5°	72°	367,227	6,782	30.60			73%	-
75-79/66	77.5	32.4	27.9	436	8,400	6.438	2,807	8,400	51.9°	77.5°	0.0°	77.5°	72°	420,147	8,235	35.01			83%	-
80-84/69	82.5	33.8	29.1	265	8,400	6.438	1,706	8,400	51.9°	82.5°	0.0°	82.5°	72°	473,067	6,345	39.42			93%	-
85-89/72	87.5	36.5	30.3	106	8,400	6.438	682	8,400	51.9°	87.5°	0.0°	87.5°	72°	575,127	3,751	47.93			114%	-
90-94/73	92.5	39.2	31.6	17	8,400	6.438	109	8,400	51.9°	92.5°	0.0°	92.5°	72°	677,187	834	56.43			134%	
				8,760.00			56,397								36,113	56.43				11,237

CONVERSION FACTORS				Design Conditions		
	46%	Sensible	/latent	Supply CFM	8,400	
FANHP (F.L.)	**7.72**	HP@	8,400	Total Cooling	506,250	665,000
RAFHP (F.L.)	**-**	HP@	0	Sensible Cooling	230,429	
FMEFF	**90%**	Percent		Air Side TD	25.40	
CFMREF	**8,400**	CFM		Supply HP	10.00	
DREFF	**97%**	Percent	(@F.L.)	T.S.P.	3.5	
MINVOL	**3,360**	CFM	CFM	Supply Fan Eff	60%	
Conv. Fact.	6,344	60	0.24	Return CFM	-	
Off Coil Conditions	52	21.29	28	Return T.S.P.	-	
Gas (BTU/CCF):	102,800	Heat Pipe Eff:	-	Return Fan HP	-	
kW/ton=	0.65			Return Fan Eff	60%	

Proposed Operation

Bin DB temp/ WetBulb	Average Temp	enthapy OA btu/lb	enthapy Mixed Air btu/lb	Bin hrs	SA air flow CFM	Fan kW	Fan kWh	OA air flow CFM	Discharge Air Temp	MAT Air Temp	Heat Pipe Air Temp DT °F	MAT Air Temp w/ Hpipe	Space Temp setpoint	Total Cooling BTU/Hr	Total Cooling kWh/year	Total Cooling Demand Tons	Total Heating BTU/Hr	Total Reheat BTU/Hr	Run Fraction	Proposed Heating CCF/year
-15 -11 / -12.6	-12.5	0.0		0	8,400	6.438	-	8,400	75.0°	-12.5°	0.0°	-12.5°	72°				665,000		100%	-
-10 -6 / -7.1	-7.5	0.0		0	8,400	6.438	-	8,400	75.0°	-7.5°	0.0°	-7.5°	72°				665,000		100%	-
-5 -1 /-2.9	-2.5	0.0		0	8,400	6.438	-	8,400	75.0°	-2.5°	0.0°	-2.5°	72°				665,000		100%	-
0-4/1	2.5	0.0		2	8,400	6.438	13	8,400	75.0°	2.5°	0.0°	2.5°	72°				657,720		99%	16.23
5-9/6	7.5	2.9		4	8,400	6.438	26	8,400	74.0°	7.5°	0.0°	7.5°	72°				603,288		92%	27.71
10-14/11	12.5	4.2		53	8,400	6.438	341	8,400	73.0°	12.5°	0.0°	12.5°	72°				548,856		85%	309.32
15-19/15	17.5	5.7		210	8,400	6.438	1,352	8,400	72.0°	17.5°	0.0°	17.5°	72°				494,424		78%	1,015.73
20-24/20	22.5	7.3		370	8,400	6.438	2,382	8,400	72.0°	22.5°	0.0°	22.5°	72°				449,064		72%	1,484.10
25-29/25	27.5	9.0		337	8,400	6.438	2,170	8,400	72.0°	27.5°	0.0°	27.5°	72°				403,704		65%	1,099.46
30-34/30	32.5	11.1		719	8,400	6.438	4,629	8,400	72.0°	32.5°	0.0°	32.5°	72°				358,344		58%	1,862.99
35-39/34	37.5	12.8		662	8,400	6.438	4,262	8,400	72.0°	37.5°	0.0°	37.5°	72°				312,984		51%	1,321.92
40-44/38	42.5	15.1		577	8,400	6.438	3,715	8,400	72.0°	42.5°	0.0°	42.5°	72°				267,624		44%	853.84
45-49/42	47.5	17.0		426	8,400	6.438	2,743	8,400	72.0°	47.5°	0.0°	47.5°	72°				222,264		35%	413.29
50-54/47	52.5	19.7	21.8	531	8,400	6.438	3,419	8,400	51.9°	52.5°	0.0°	52.5°	72°		-	-			15%	-
55-59/52	57.5	22.9	23.0	642	8,400	6.438	4,133	8,400	51.9°	57.5°	0.0°	57.5°	72°	61,047	256	5.09			12%	-
60-64/56	62.5	25.7	24.2	827	8,400	6.438	5,324	8,400	51.9°	62.5°	0.0°	62.5°	72°	166,887	2,464	13.91			33%	-
65-69/60	67.5	28.7	25.5	682	8,400	6.438	4,391	8,400	51.9°	67.5°	0.0°	67.5°	72°	280,287	5,733	23.36			55%	-
70-74/63	72.5	31.0	26.7	448	8,400	6.438	2,884	8,400	51.9°	72.5°	0.0°	72.5°	72°	367,227	6,464	30.60			73%	-
75-79/66	77.5	32.4	27.9	422	8,400	6.438	2,717	8,400	51.9°	77.5°	0.0°	77.5°	72°	420,147	7,970	35.01			83%	-
80-84/69	82.5	33.8	29.1	265	8,400	6.438	1,706	8,400	51.9°	82.5°	0.0°	82.5°	72°	473,067	6,345	39.42			93%	-
85-89/72	87.5	36.5	30.3	106	8,400	6.438	682	8,400	51.9°	87.5°	0.0°	87.5°	72°	575,127	3,751	47.93			114%	-
90-94/73	92.5	39.2	31.6	17	8,400	6.438	109	8,400	51.9°	92.5°	0.0°	92.5°	72°	677,187	834	56.43			134%	
				7,300.00			46,997								33,819	56.43				8,405

Title	**Control Upgrades**
ECM#	**7**
Project:	**SCI Houtzdale**
Site:	**SCI Houtzdale**
Unit #:	**AHU-31**

CONVERSION FACTORS				Design Conditions		
SLR	**96%**	Sensible	/latent	Supply CFM	6,150	
FANHP (F.L.)	**5.65**	HP@	6,150	Total Cooling	175,500	487,000
RAFHP (F.L.)	-	HP@	0	Sensible Cooling	168,043	
FMEFF	**90%**	Percent		Air Side TD	25.30	
CFMREF	**6,150**	CFM		Supply HP	7.5	
DREFF	**97%**	Percent	(@F.L.)	T.S.P.	3.5	
MINVOL	**2,460**	CFM	CFM	Supply Fan Eff	60%	
Conv. Fact.	6,344	60	0.24	Return CFM	-	
Off Coil Conditions	55	23.00		Return T.S.P.	1.5	
Gas (BTU/CCF):	102,800	Heat Pipe Eff:	-	Return Fan HP	5.0	
kW/ton=	0.65			Return Fan Eff	60%	

Existing Operation

Bin DB temp/ WetBulb	Average Temp	enthapy OA btu/lb	enthapy Mixed Air btu/lb	Bin hrs	SA air flow CFM	Fan kW	Fan kWh	OA air flow CFM	Discharge Air Temp	MAT Air Temp	Heat Pipe Air Temp DT °F	MAT Air Temp w/ Hpipe	Space Temp setpoint	Total Cooling BTU/Hr	Total Cooling kWh/year	Total Cooling Demand Tons	Total Heating BTU/Hr	Total Reheat BTU/Hr	Run Fraction	Existing Heating CCF/year
-15 -11 / -12.6	-12.5	0.0		0	6,150	4.714	-	6,150	75.0°	-12.5°	0.0°	-12.5°	72°				487,000		100%	-
-10 -6 / -7.1	-7.5	0.0		0	6,150	4.714	-	6,150	75.0°	-7.5°			72°				487,000		100%	-
-5 -1 / -2.9	-2.5	0.0		0	6,150	4.714	-	6,150	75.0°	-2.5°			72°				487,000		100%	-
0-4/1	2.5	0.0		2	6,150	4.714	9	6,150	75.0°	2.5°	0.0°	2.5°	72°				481,545		99%	11.88
5-9/6	7.5	2.9		5	6,150	4.714	24	6,150	75.0°	7.5°	0.0°	7.5°	72°				448,335		92%	25.74
10-14/11	12.5	4.2		77	6,150	4.714	363	6,150	75.0°	12.5°	0.0°	12.5°	72°				415,125		85%	339.81
15-19/15	17.5	5.7		270	6,150	4.714	1,273	6,150	75.0°	17.5°	0.0°	17.5°	72°				381,915		78%	1,008.51
20-24/20	22.5	7.3		452	6,150	4.714	2,131	6,150	75.0°	22.5°	0.0°	22.5°	72°				348,705		72%	1,407.47
25-29/25	27.5	9.0		411	6,150	4.714	1,937	6,150	75.0°	27.5°	0.0°	27.5°	72°				315,495		65%	1,047.64
30-34/30	32.5	11.1		897	6,150	4.714	4,228	6,150	75.0°	32.5°	0.0°	32.5°	72°				282,285		58%	1,830.42
35-39/34	37.5	12.8		808	6,150	4.714	3,809	6,150	75.0°	37.5°	0.0°	37.5°	72°				249,075		51%	1,283.67
40-44/38	42.5	15.1		722	6,150	4.714	3,403	6,150	75.0°	42.5°	0.0°	42.5°	72°		-	-	215,865		44%	861.56
45-49/42	47.5	17.0		512	6,150	4.714	2,413	6,150	75.0°	47.5°	0.0°	47.5°	72°		-	-	182,655		35%	408.21
50-54/47	52.5	19.7	21.8	659	6,150	4.714	3,106	6,150	54.8°	52.5°	0.0°	52.5°	72°		-	-	15,277		15%	18.83
55-59/52	57.5	22.9	23.0	829	6,150	4.714	3,908	6,150	54.8°	57.5°	0.0°	57.5°	72°	17,933	82	1.49	-		10%	-
60-64/56	62.5	25.7	24.2	1010	6,150	4.714	4,761	6,150	54.8°	62.5°	0.0°	62.5°	72°	51,143	815	4.26	-		29%	-
65-69/60	67.5	28.7	25.5	812	6,150	4.714	3,827	6,150	54.8°	67.5°	0.0°	67.5°	72°	84,353	1,783	7.03			48%	-
70-74/63	72.5	31.0	26.7	470	6,150	4.714	2,215	6,150	54.8°	72.5°	0.0°	72.5°	72°	117,563	2,005	9.80			67%	-
75-79/66	77.5	32.4	27.9	436	6,150	4.714	2,055	6,150	54.8°	77.5°	0.0°	77.5°	72°	150,773	3,059	12.56			86%	-
80-84/69	82.5	33.8	29.1	265	6,150	4.714	1,249	6,150	54.8°	82.5°	0.0°	82.5°	72°	183,983	2,769	15.33			105%	-
85-89/72	87.5	36.5	30.3	106	6,150	4.714	500	6,150	54.8°	87.5°	0.0°	87.5°	72°	217,193	1,543	18.10			124%	-
90-94/73	92.5	39.2	31.6	17	6,150	4.714	80	6,150	54.8°	92.5°	0.0°	92.5°	72°	250,403	329	20.87			143%	
				8,760.00			41,290								12,386	20.87				8,244

CONVERSION FACTORS				Design Conditions		
	96%	Sensible	/latent	Supply CFM	6,150	
FANHP (F.L.)	**5.65**	HP@	6,150	Total Cooling	175,500	487,000
RAFHP (F.L.)	-	HP@	0	Sensible Cooling	168,043	
FMEFF	**90%**	Percent		Air Side TD	25.30	
CFMREF	**6,150**	CFM		Supply HP	7.50	
DREFF	**97%**	Percent	(@F.L.)	T.S.P.	3.5	
MINVOL	**2,460**	CFM	CFM	Supply Fan Eff	65%	
Conv. Fact.	6,344	60	0.24	Return CFM	-	
Off Coil Conditions	55	23.00	28	Return T.S.P.	-	
Gas (BTU/CCF):	102,800	Heat Pipe Eff:	-	Return Fan HP	-	
kW/ton=	0.65			Return Fan Eff	60%	

Proposed Operation

Bin DB temp/ WetBulb	Average Temp	enthapy OA btu/lb	enthapy Mixed Air btu/lb	Bin hrs	SA air flow CFM	Fan kW	Fan kWh	OA air flow CFM	Discharge Air Temp	MAT Air Temp	Heat Pipe Air Temp DT °F	MAT Air Temp w/ Hpipe	Space Temp setpoint	Total Cooling BTU/Hr	Total Cooling kWh/year	Total Cooling Demand Tons	Total Heating BTU/Hr	Total Reheat BTU/Hr	Run Fraction	Proposed Heating CCF/year
-15 -11 / -12.6	-12.5	0.0		0	6,150	4.714	-	6,150	75.0°	-12.5°	0.0°	-12.5°	72°				487,000		100%	-
-10 -6 / -7.1	-7.5	0.0		0	6,150	4.714	-	6,150	75.0°	-7.5°	0.0°	-7.5°	72°				487,000		100%	-
-5 -1 / -2.9	-2.5	0.0		0	6,150	4.714	-	6,150	75.0°	-2.5°	0.0°	-2.5°	72°				487,000		100%	-
0-4/1	2.5	0.0		2	6,150	4.714	9	6,150	75.0°	2.5°	0.0°	2.5°	72°				481,545		99%	11.88
5-9/6	7.5	2.9		4	6,150	4.714	19	6,150	74.0°	7.5°	0.0°	7.5°	72°				441,693		92%	20.28
10-14/11	12.5	4.2		53	6,150	4.714	250	6,150	73.0°	12.5°	0.0°	12.5°	72°				401,841		85%	226.41
15-19/15	17.5	5.7		210	6,150	4.714	990	6,150	72.0°	17.5°	0.0°	17.5°	72°				361,989		78%	743.47
20-24/20	22.5	7.3		370	6,150	4.714	1,744	6,150	72.0°	22.5°	0.0°	22.5°	72°				328,779		72%	1,086.29
25-29/25	27.5	9.0		337	6,150	4.714	1,588	6,150	72.0°	27.5°	0.0°	27.5°	72°				295,569		65%	804.76
30-34/30	32.5	11.1		719	6,150	4.714	3,389	6,150	72.0°	32.5°	0.0°	32.5°	72°				262,359		58%	1,363.63
35-39/34	37.5	12.8		662	6,150	4.714	3,120	6,150	72.0°	37.5°	0.0°	37.5°	72°				229,149		51%	967.59
40-44/38	42.5	15.1		577	6,150	4.714	2,720	6,150	72.0°	42.5°	0.0°	42.5°	72°				195,939		44%	624.97
45-49/42	47.5	17.0		426	6,150	4.714	2,008	6,150	72.0°	47.5°	0.0°	47.5°	72°				162,729		35%	302.59
50-54/47	52.5	19.7	21.8	531	6,150	4.714	2,503	6,150	54.8°	52.5°	0.0°	52.5°	72°		-	-	15,277		15%	15.17
55-59/52	57.5	22.9	23.0	642	6,150	4.714	3,026	6,150	54.8°	57.5°	0.0°	57.5°	72°	17,933	64	1.49			10%	-
60-64/56	62.5	25.7	24.2	827	6,150	4.714	3,898	6,150	54.8°	62.5°	0.0°	62.5°	72°	51,143	668	4.26			29%	-
65-69/60	67.5	28.7	25.5	682	6,150	4.714	3,215	6,150	54.8°	67.5°	0.0°	67.5°	72°	84,353	1,498	7.03			48%	-
70-74/63	72.5	31.0	26.7	448	6,150	4.714	2,112	6,150	54.8°	72.5°	0.0°	72.5°	72°	117,563	1,911	9.80			67%	-
75-79/66	77.5	32.4	27.9	422	6,150	4.714	1,989	6,150	54.8°	77.5°	0.0°	77.5°	72°	150,773	2,961	12.56			86%	-
80-84/69	82.5	33.8	29.1	265	6,150	4.714	1,249	6,150	54.8°	82.5°	0.0°	82.5°	72°	183,983	2,769	15.33			105%	-
85-89/72	87.5	36.5	30.3	106	6,150	4.714	500	6,150	54.8°	87.5°	0.0°	87.5°	72°	217,193	1,543	18.10			124%	-
90-94/73	92.5	39.2	31.6	17	6,150	4.714	80	6,150	54.8°	92.5°	0.0°	92.5°	72°	250,403	329	20.87			143%	
				7,300.00			34,409								11,742	20.87				6,167

Title	**Control Upgrades**
ECM#	**7**
Project:	**SCI Houtzdale**
Site:	**SCI Houtzdale**
Unit #:	**AHU-32**

CONVERSION FACTORS				Design Conditions		
SLR	**116%**	Sensible	/latent	Supply CFM	5,200	
FANHP (F.L.)	**5.46**	HP@	5,200	Total Cooling	122,250	200,000
RAFHP (F.L.)	**0.76**	HP@	2,895	Sensible Cooling	142,085	
FMEFF	**90%**	Percent		Air Side TD	25.30	
CFMREF	**5,200**	CFM		Supply HP	7.5	
DREFF	**97%**	Percent	(@F.L.)	T.S.P.	4.0	
MINVOL	**2,080**	CFM	CFM	Supply Fan Eff	60%	
Conv. Fact.	6,344	60	0.24	Return CFM	2,895	
Off Coil Conditions	57	24.18		Return T.S.P.	1.0	
Gas (BTU/CCF):	102,800	Heat Pipe Eff:	-	Return Fan HP	1.0	
kW/ton=	0.65			Return Fan Eff	60%	

Existing Operation

Bin DB temp/ WetBulb	Average Temp	enthapy OA btu/lb	enthapy Mixed Air btu/lb	Bin hrs	SA air flow CFM	Fan kW	Fan kWh	OA air flow CFM	Discharge Air Temp	MAT Air Temp	Heat Pipe Air Temp DT °F	MAT Air Temp w/ Hpipe	Space Temp setpoint	Total Cooling BTU/Hr	Total Cooling kWh/year	Total Cooling Demand Tons	Total Heating BTU/Hr	Total Reheat BTU/Hr	Run Fraction	Existing Heating CCF/year
-15 -11 / -12.6	-12.5	0.0		0	5,200	5.223	-	2,305	75.0°	34.5°	0.0°	34.5°	72°				200,000		100%	-
-10 -6 / -7.1	-7.5	0.0		0	5,200	5.223	-	2,305	75.0°	36.8°	0.0°	36.8°	72°				200,000		100%	-
-5 -1 / -2.9	-2.5	0.0		0	5,200	5.223	-	2,305	75.0°	39.0°	0.0°	39.0°	72°				200,000		100%	-
0-4/1	2.5	0.0		2	5,200	5.223	10	2,305	75.0°	41.2°	0.0°	41.2°	72°				189,861		95%	4.50
5-9/6	7.5	2.9		5	5,200	5.223	26	2,305	75.0°	43.4°	0.0°	43.4°	72°				177,414		89%	9.81
10-14/11	12.5	4.2		77	4,940	5.055	389	2,190	75.0°	45.6°	0.0°	45.6°	72°				156,719		78%	117.93
15-19/15	17.5	5.7		270	4,680	4.877	1,317	2,075	75.0°	47.8°	0.0°	47.8°	72°				137,268		69%	317.24
20-24/20	22.5	7.3		452	4,420	4.700	2,124	1,959	75.0°	50.1°	0.0°	50.1°	72°				119,062		60%	399.55
25-29/25	27.5	9.0		411	4,160	4.518	1,857	1,844	75.0°	52.3°	0.0°	52.3°	72°				102,101		51%	267.17
30-34/30	32.5	11.1		897	3,900	4.333	3,886	1,729	75.0°	54.5°	0.0°	54.5°	72°				86,384		43%	417.39
35-39/34	37.5	12.8		808	3,640	4.142	3,347	1,614	75.0°	56.7°	0.0°	56.7°	72°				71,913		36%	260.56
40-44/38	42.5	15.1		722	3,380	3.947	2,850	1,498	75.0°	58.9°	0.0°	58.9°	72°		-	-	58,685		29%	155.05
45-49/42	47.5	17.0		512	3,120	3.747	1,919	1,383	75.0°	61.1°	0.0°	61.1°	72°		-	-	46,703		35%	104.37
50-54/47	52.5	19.7	24.5	659	3,120	3.747	2,470	1,383	56.7°	63.4°	0.0°	63.4°	72°	22,429	120	1.87	-		15%	-
55-59/52	57.5	22.9	25.0	829	3,380	3.947	3,272	1,498	56.7°	65.6°	0.0°	65.6°	72°	32,389	385	2.70	-		26%	-
60-64/56	62.5	25.7	25.5	1010	3,640	4.142	4,184	1,614	56.7°	67.8°	0.0°	67.8°	72°	43,593	850	3.63	-		36%	-
65-69/60	67.5	28.7	26.1	812	3,900	4.333	3,518	1,729	56.7°	70.0°	0.0°	70.0°	72°	56,042	1,130	4.67			46%	-
70-74/63	72.5	31.0	26.6	470	4,160	4.518	2,123	1,844	56.7°	72.2°	0.0°	72.2°	72°	69,736	1,013	5.81			57%	-
75-79/66	77.5	32.4	27.2	436	4,420	4.700	2,049	1,959	56.7°	74.4°	0.0°	74.4°	72°	84,674	1,385	7.06			69%	-
80-84/69	82.5	33.8	27.7	265	4,680	4.877	1,293	2,075	56.7°	76.7°	0.0°	76.7°	72°	100,857	1,194	8.40			83%	-
85-89/72	87.5	36.5	28.2	106	4,940	5.055	536	2,190	56.7°	78.9°	0.0°	78.9°	72°	118,285	657	9.86			97%	-
90-94/73	92.5	39.2	28.8	17	5,200	5.223	89	2,305	56.7°	81.1°	0.0°	81.1°	72°	136,958	141	11.41			112%	
				8,760.00			37,259								6,876	11.41				2,054

CONVERSION FACTORS				Design Conditions		
	116%	Sensible	/latent	Supply CFM	5,200	
FANHP (F.L.)	**5.46**	HP@	5,200	Total Cooling	122,250	200,000
RAFHP (F.L.)	**0.76**	HP@	2,895	Sensible Cooling	142,085	
FMEFF	**90%**	Percent		Air Side TD	25.30	
CFMREF	**5,200**	CFM		Supply HP	7.50	
DREFF	**97%**	Percent	(@F.L.)	T.S.P.	4.0	
MINVOL	**2,080**	CFM	CFM	Supply Fan Eff	60%	
Conv. Fact.	6,344	60	0.24	Return CFM	2,895	
Off Coil Conditions	57	24.18	28	Return T.S.P.	1.0	
Gas (BTU/CCF):	102,800	Heat Pipe Eff:	-	Return Fan HP	1.0	
kW/ton=	0.65			Return Fan Eff	60%	

Proposed Operation

Bin DB temp/ WetBulb	Average Temp	enthapy OA btu/lb	enthapy Mixed Air btu/lb	Bin hrs	SA air flow CFM	Fan kW	Fan kWh	OA air flow CFM	Discharge Air Temp	MAT Air Temp	Heat Pipe Air Temp DT °F	MAT Air Temp w/ Hpipe	Space Temp setpoint	Total Cooling BTU/Hr	Total Cooling kWh/year	Total Cooling Demand Tons	Total Heating BTU/Hr	Total Reheat BTU/Hr	Run Fraction	Proposed Heating CCF/year
-15 -11 / -12.6	-12.5	0.0		0	5,200	5.157	-	2,305	75.0°	34.5°	0.0°	34.5°	72°				200,000		100%	-
-10 -6 / -7.1	-7.5	0.0		0	5,200	5.157	-	2,305	75.0°	36.8°	0.0°	36.8°	72°				200,000		100%	-
-5 -1 / -2.9	-2.5	0.0		0	5,200	5.157	-	2,305	75.0°	39.0°	0.0°	39.0°	72°				200,000		100%	-
0-4/1	2.5	0.0		2	5,200	5.157	10	2,305	75.0°	41.2°	0.0°	41.2°	72°				189,861		95%	4.50
5-9/6	7.5	2.9		5	5,200	5.157	26	2,305	74.0°	43.4°	0.0°	43.4°	72°				171,798		89%	9.50
10-14/11	12.5	4.2		77	4,940	4.457	343	2,190	73.0°	45.6°	0.0°	45.6°	72°				146,049		78%	109.90
15-19/15	17.5	5.7		270	4,680	3.799	1,026	2,075	72.0°	47.8°	0.0°	47.8°	72°				122,105		69%	282.20
20-24/20	22.5	7.3		452	4,420	3.219	1,455	1,959	72.0°	50.1°	0.0°	50.1°	72°				104,742		60%	351.49
25-29/25	27.5	9.0		411	4,160	2.700	1,110	1,844	72.0°	52.3°	0.0°	52.3°	72°				88,623		51%	231.90
30-34/30	32.5	11.1		897	3,900	2.239	2,009	1,729	72.0°	54.5°	0.0°	54.5°	72°				73,748		43%	356.34
35-39/34	37.5	12.8		808	3,640	1.833	1,481	1,614	72.0°	56.7°	0.0°	56.7°	72°				60,119		36%	217.83
40-44/38	42.5	15.1		722	3,380	1.478	1,067	1,498	72.0°	58.9°	0.0°	58.9°	72°				47,734		29%	126.12
45-49/42	47.5	17.0		512	3,120	1.172	600	1,383	72.0°	61.1°	0.0°	61.1°	72°				36,594		35%	81.78
50-54/47	52.5	19.7	24.5	659	3,120	1.172	773	1,383	56.7°	63.4°	0.0°	63.4°	72°	22,429	120	1.87			15%	-
55-59/52	57.5	22.9	25.0	829	3,380	1.478	1,225	1,498	56.7°	65.6°	0.0°	65.6°	72°	32,389	385	2.70			26%	-
60-64/56	62.5	25.7	25.5	1010	3,640	1.833	1,851	1,614	56.7°	67.8°	0.0°	67.8°	72°	43,593	850	3.63			36%	-
65-69/60	67.5	28.7	26.1	812	3,900	2.239	1,818	1,729	56.7°	70.0°	0.0°	70.0°	72°	56,042	1,130	4.67			46%	-
70-74/63	72.5	31.0	26.6	470	4,160	2.700	1,269	1,844	56.7°	72.2°	0.0°	72.2°	72°	69,736	1,013	5.81			57%	-
75-79/66	77.5	32.4	27.2	436	4,420	3.219	1,403	1,959	56.7°	74.4°	0.0°	74.4°	72°	84,674	1,385	7.06			69%	-
80-84/69	82.5	33.8	27.7	265	4,680	3.799	1,007	2,075	56.7°	76.7°	0.0°	76.7°	72°	100,857	1,194	8.40			83%	-
85-89/72	87.5	36.5	28.2	106	4,940	4.457	472	2,190	56.7°	78.9°	0.0°	78.9°	72°	118,285	657	9.86			97%	-
90-94/73	92.5	39.2	28.8	17	5,200	5.157	88	2,305	56.7°	81.1°	0.0°	81.1°	72°	136,958	141	11.41			112%	
				8,760.00			19,033								6,876	11.41				1,772

Title	**Control Upgrades**
ECM#	**7**
Project:	**SCI Houtzdale**
Site:	**SCI Houtzdale**
Unit #:	**AHU-33**

CONVERSION FACTORS				Design Conditions		
SLR	**93%**	Sensible	/latent	Supply CFM	4,310	
FANHP (F.L.)	**0.49**	HP@	4,310	Total Cooling	119,250	38,000
RAFHP (F.L.)	**0.53**	HP@	2,005	Sensible Cooling	111,250	
FMEFF	**83%**	Percent		Air Side TD	23.90	
CFMREF	**4,310**	CFM		Supply HP	0.5	
DREFF	**97%**	Percent	(@F.L.)	T.S.P.	0.5	
MINVOL	**1,724**	CFM	CFM	Supply Fan Eff	70%	
Conv. Fact.	6,344	60	0.24	Return CFM	2,005	
Off Coil Conditions	55	23.12		Return T.S.P.	1.0	
Gas (BTU/CCF):	102,800	Heat Pipe Eff:	-	Return Fan HP	1.0	
kW/ton=	0.65			Return Fan Eff	60%	

Existing Operation

Bin DB temp/ WetBulb	Average Temp	enthapy OA btu/lb	enthapy Mixed Air btu/lb	Bin hrs	SA air flow CFM	Fan kW	Fan kWh	OA air flow CFM	Discharge Air Temp	MAT Air Temp	Heat Pipe Air Temp DT °F	MAT Air Temp w/ Hpipe	Space Temp setpoint	Total Cooling BTU/Hr	Total Cooling kWh/year	Total Cooling Demand Tons	Total Heating BTU/Hr	Total Reheat BTU/Hr	Run Fraction	Existing Heating CCF/year
-15 -11 / -12.6	-12.5	0.0		0	4,310	2.045	-	2,305	75.0°	26.8°	0.0°	26.8°	72°				38,000		100%	-
-10 -6 / -7.1	-7.5	0.0		0	4,310	2.045	-	2,305	75.0°	29.5°	0.0°	29.5°	72°				38,000		100%	-
-5 -1 /-2.9	-2.5	0.0		0	4,310	2.045	-	2,305	75.0°	32.2°	0.0°	32.2°	72°				38,000		100%	-
0-4/1	2.5	0.0		2	4,310	2.045	4	2,305	75.0°	34.8°	0.0°	34.8°	72°				38,000		100%	0.95
5-9/6	7.5	2.9		5	4,310	2.045	10	2,305	75.0°	37.5°	0.0°	37.5°	72°				38,000		100%	2.37
10-14/11	12.5	4.2		77	4,095	1.979	152	2,190	75.0°	40.2°	0.0°	40.2°	72°				38,000		100%	36.49
15-19/15	17.5	5.7		270	3,879	1.909	516	2,075	75.0°	42.9°	0.0°	42.9°	72°				38,000		100%	127.96
20-24/20	22.5	7.3		452	3,664	1.840	832	1,959	75.0°	45.5°	0.0°	45.5°	72°				38,000		100%	214.21
25-29/25	27.5	9.0		411	3,448	1.769	727	1,844	75.0°	48.2°	0.0°	48.2°	72°				38,000		100%	194.78
30-34/30	32.5	11.1		897	3,233	1.696	1,521	1,729	75.0°	50.9°	0.0°	50.9°	72°				38,000		100%	425.10
35-39/34	37.5	12.8		808	3,017	1.622	1,310	1,614	75.0°	53.5°	0.0°	53.5°	72°				38,000		100%	382.92
40-44/38	42.5	15.1		722	2,802	1.545	1,116	1,498	75.0°	56.2°	0.0°	56.2°	72°		-	-	38,000		100%	342.16
45-49/42	47.5	17.0		512	2,586	1.467	751	1,383	75.0°	58.9°	0.0°	58.9°	72°		-	-	38,000		35%	84.92
50-54/47	52.5	19.7	24.0	659	2,586	1.467	967	1,383	55.0°	61.6°	0.0°	61.6°	72°	18,353	98	1.53	-		15%	-
55-59/52	57.5	22.9	24.7	829	2,802	1.545	1,281	1,498	55.0°	64.2°	0.0°	64.2°	72°	27,973	295	2.33	-		23%	-
60-64/56	62.5	25.7	25.3	1010	3,017	1.622	1,638	1,614	55.0°	66.9°	0.0°	66.9°	72°	38,838	692	3.24	-		33%	-
65-69/60	67.5	28.7	26.0	812	3,233	1.696	1,377	1,729	55.0°	69.6°	0.0°	69.6°	72°	50,947	957	4.25			43%	-
70-74/63	72.5	31.0	26.6	470	3,448	1.769	831	1,844	55.0°	72.3°	0.0°	72.3°	72°	64,301	883	5.36			54%	-
75-79/66	77.5	32.4	27.3	436	3,664	1.840	802	1,959	55.0°	74.9°	0.0°	74.9°	72°	78,900	1,233	6.57			66%	-
80-84/69	82.5	33.8	27.9	265	3,879	1.909	506	2,075	55.0°	77.6°	0.0°	77.6°	72°	94,743	1,080	7.90			79%	-
85-89/72	87.5	36.5	28.6	106	4,095	1.979	210	2,190	55.0°	80.3°	0.0°	80.3°	72°	111,831	602	9.32			94%	-
90-94/73	92.5	39.2	29.2	17	4,310	2.045	35	2,305	55.0°	83.0°	0.0°	83.0°	72°	130,164	131	10.85			109%	
				8,760.00			14,586								5,971	10.85				1,812

CONVERSION FACTORS				Design Conditions		
	93%	Sensible	/latent	Supply CFM	4,310	
FANHP (F.L.)	**0.49**	HP@	4,310	Total Cooling	119,250	38,000
RAFHP (F.L.)	**0.53**	HP@	2,005	Sensible Cooling	111,250	
FMEFF	**83%**	Percent		Air Side TD	23.90	
CFMREF	**4,310**	CFM		Supply HP	0.50	
DREFF	**97%**	Percent	(@F.L.)	T.S.P.	0.5	
MINVOL	**1,724**	CFM	CFM	Supply Fan Eff	70%	
Conv. Fact.	6,344	60	0.24	Return CFM	2,005	
Off Coil Conditions	55	23.12	28	Return T.S.P.	1.0	
Gas (BTU/CCF):	102,800	Heat Pipe Eff:	-	Return Fan HP	1.0	
kW/ton=	0.65			Return Fan Eff	60%	

Proposed Operation

Bin DB temp/ WetBulb	Average Temp	enthapy OA btu/lb	enthapy Mixed Air btu/lb	Bin hrs	SA air flow CFM	Fan kW	Fan kWh	OA air flow CFM	Discharge Air Temp	MAT Air Temp	Heat Pipe Air Temp DT °F	MAT Air Temp w/ Hpipe	Space Temp setpoint	Total Cooling BTU/Hr	Total Cooling kWh/year	Total Cooling Demand Tons	Total Heating BTU/Hr	Total Reheat BTU/Hr	Run Fraction	Proposed Heating CCF/year
-15 -11 / -12.6	-12.5	0.0		0	4,310	2.019	-	2,305	75.0°	26.8°	0.0°	26.8°	72°				38,000		100%	-
-10 -6 / -7.1	-7.5	0.0		0	4,310	2.019	-	2,305	75.0°	29.5°	0.0°	29.5°	72°				38,000		100%	-
-5 -1 /-2.9	-2.5	0.0		0	4,310	2.019	-	2,305	75.0°	32.2°	0.0°	32.2°	72°				38,000		100%	-
0-4/1	2.5	0.0		2	4,310	2.019	4	2,305	75.0°	34.8°	0.0°	34.8°	72°				38,000		100%	0.95
5-9/6	7.5	2.9		5	4,310	2.019	10	2,305	74.0°	37.5°	0.0°	37.5°	72°				38,000		100%	2.37
10-14/11	12.5	4.2		77	4,095	1.745	134	2,190	73.0°	40.2°	0.0°	40.2°	72°				38,000		100%	36.49
15-19/15	17.5	5.7		270	3,879	1.487	402	2,075	72.0°	42.9°	0.0°	42.9°	72°				38,000		100%	127.96
20-24/20	22.5	7.3		452	3,664	1.260	570	1,959	72.0°	45.5°	0.0°	45.5°	72°				38,000		100%	214.21
25-29/25	27.5	9.0		411	3,448	1.057	434	1,844	72.0°	48.2°	0.0°	48.2°	72°				38,000		100%	194.78
30-34/30	32.5	11.1		897	3,233	0.877	786	1,729	72.0°	50.9°	0.0°	50.9°	72°				38,000		100%	425.10
35-39/34	37.5	12.8		808	3,017	0.718	580	1,614	72.0°	53.5°	0.0°	53.5°	72°				38,000		100%	382.92
40-44/38	42.5	15.1		722	2,802	0.579	418	1,498	72.0°	56.2°	0.0°	56.2°	72°				38,000		100%	342.16
45-49/42	47.5	17.0		512	2,586	0.459	235	1,383	72.0°	58.9°	0.0°	58.9°	72°				36,594		35%	81.78
50-54/47	52.5	19.7	24.0	659	2,586	0.459	302	1,383	55.0°	61.6°	0.0°	61.6°	72°	18,353	98	1.53	-		15%	-
55-59/52	57.5	22.9	24.7	829	2,802	0.579	480	1,498	55.0°	64.2°	0.0°	64.2°	72°	27,973	295	2.33			23%	-
60-64/56	62.5	25.7	25.3	1010	3,017	0.718	725	1,614	55.0°	66.9°	0.0°	66.9°	72°	38,838	692	3.24			33%	-
65-69/60	67.5	28.7	26.0	812	3,233	0.877	712	1,729	55.0°	69.6°	0.0°	69.6°	72°	50,947	957	4.25			43%	-
70-74/63	72.5	31.0	26.6	470	3,448	1.057	497	1,844	55.0°	72.3°	0.0°	72.3°	72°	64,301	883	5.36			54%	-
75-79/66	77.5	32.4	27.3	436	3,664	1.260	549	1,959	55.0°	74.9°	0.0°	74.9°	72°	78,900	1,233	6.57			66%	-
80-84/69	82.5	33.8	27.9	265	3,879	1.487	394	2,075	55.0°	77.6°	0.0°	77.6°	72°	94,743	1,080	7.90			79%	-
85-89/72	87.5	36.5	28.6	106	4,095	1.745	185	2,190	55.0°	80.3°	0.0°	80.3°	72°	111,831	602	9.32			94%	-
90-94/73	92.5	39.2	29.2	17	4,310	2.019	34	2,305	55.0°	83.0°	0.0°	83.0°	72°	130,164	131	10.85			109%	
				8,760.00			7,451								5,971	10.85				1,809

Title	**Control Upgrades**
ECM#	**7**
Project:	**SCI Houtzdale**
Site:	**SCI Houtzdale**
Unit #:	**AHU-34**

CONVERSION FACTORS				Design Conditions		
SLR	**65%**	Sensible	/latent	Supply CFM	7,840	
FANHP (F.L.)	**6.18**	HP@	7,840	Total Cooling	328,500	258,000
RAFHP (F.L.)	**1.09**	HP@	5,535	Sensible Cooling	215,067	
FMEFF	**90%**	Percent		Air Side TD	25.40	
CFMREF	**7,840**	CFM		Supply HP	7.5	
DREFF	**97%**	Percent	(@F.L.)	T.S.P.	3.0	
MINVOL	**3,136**	CFM	CFM	Supply Fan Eff	60%	
Conv. Fact.	6,344	60	0.24	Return CFM	5,535	
Off Coil Conditions	57	21.46		Return T.S.P.	1.0	
Gas (BTU/CCF):	102,800	Heat Pipe Eff:	-	Return Fan HP	0.8	
kW/ton=	0.65			Return Fan Eff	80%	

Existing Operation

Bin DB temp/ WetBulb	Average Temp	enthapy OA btu/lb	enthapy Mixed Air btu/lb	Bin hrs	SA air flow CFM	Fan kW	Fan kWh	OA air flow CFM	Discharge Air Temp	MAT Air Temp	Heat Pipe Air Temp DT °F	MAT Air Temp w/ Hpipe	Space Temp setpoint	Total Cooling BTU/Hr	Total Cooling kWh/year	Total Cooling Demand Tons	Total Heating BTU/Hr	Total Reheat BTU/Hr	Run Fraction	Existing Heating CCF/year
-15 -11 / -12.6	-12.5	0.0		0	7,840	6.059	-	2,305	75.0°	47.2°	0.0°	47.2°	72°				235,756		100%	-
-10 -6 / -7.1	-7.5	0.0		0	7,840	6.059	-	2,305	75.0°	48.6°	0.0°	48.6°	72°				223,309		100%	-
-5 -1 /-2.9	-2.5	0.0		0	7,840	6.059	-	2,305	75.0°	50.1°	0.0°	50.1°	72°				210,862		100%	-
0-4/1	2.5	0.0		2	7,840	6.059	12	2,305	75.0°	51.6°	0.0°	51.6°	72°				198,415		77%	3.81
5-9/6	7.5	2.9		5	7,840	6.059	30	2,305	75.0°	53.0°	0.0°	53.0°	72°				185,968		72%	8.36
10-14/11	12.5	4.2		77	7,840	6.059	467	2,305	75.0°	54.5°	0.0°	54.5°	72°				173,521		67%	112.07
15-19/15	17.5	5.7		270	7,840	6.059	1,636	2,305	75.0°	56.0°	0.0°	56.0°	72°				161,074		62%	338.62
20-24/20	22.5	7.3		452	7,840	6.059	2,739	2,305	75.0°	57.4°	0.0°	57.4°	72°				148,627		58%	482.64
25-29/25	27.5	9.0		411	7,840	6.059	2,490	2,305	75.0°	58.9°	0.0°	58.9°	72°				136,180		53%	368.43
30-34/30	32.5	11.1		897	7,840	6.059	5,435	2,305	75.0°	60.4°	0.0°	60.4°	72°				123,733		48%	663.83
35-39/34	37.5	12.8		808	7,840	6.059	4,896	2,305	75.0°	61.9°	0.0°	61.9°	72°				111,286		43%	483.71
40-44/38	42.5	15.1		722	7,840	6.059	4,375	2,305	75.0°	63.3°	0.0°	63.3°	72°		-	-	98,839		38%	340.95
45-49/42	47.5	17.0		512	7,840	6.059	3,102	2,305	75.0°	64.8°	0.0°	64.8°	72°		-	-	86,392		35%	193.07
50-54/47	52.5	19.7	25.2	659	7,840	6.059	3,993	2,305	56.7°	66.3°	0.0°	66.3°	72°		-	-	-		15%	-
55-59/52	57.5	22.9	25.5	829	7,840	6.059	5,023	2,305	56.7°	67.7°	0.0°	67.7°	72°	143,234	2,804	11.94	-		44%	-
60-64/56	62.5	25.7	25.9	1010	7,840	6.059	6,120	2,305	56.7°	69.2°	0.0°	69.2°	72°	155,876	4,046	12.99	-		47%	-
65-69/60	67.5	28.7	26.2	812	7,840	6.059	4,920	2,305	56.7°	70.7°	0.0°	70.7°	72°	168,518	3,802	14.04			51%	-
70-74/63	72.5	31.0	26.6	470	7,840	6.059	2,848	2,305	56.7°	72.1°	0.0°	72.1°	72°	181,161	2,543	15.10			55%	-
75-79/66	77.5	32.4	27.0	436	7,840	6.059	2,642	2,305	56.7°	73.6°	0.0°	73.6°	72°	193,803	2,700	16.15			59%	-
80-84/69	82.5	33.8	27.3	265	7,840	6.059	1,606	2,305	56.7°	75.1°	0.0°	75.1°	72°	206,446	1,862	17.20			63%	-
85-89/72	87.5	36.5	27.7	106	7,840	6.059	642	2,305	56.7°	76.6°	0.0°	76.6°	72°	219,088	839	18.26			67%	-
90-94/73	92.5	39.2	28.0	17	7,840	6.059	103	2,305	56.7°	78.0°	0.0°	78.0°	72°	231,731	151	19.31			71%	
				8,760.00			53,080								18,749	19.31				2,995

CONVERSION FACTORS				Design Conditions		
	65%	Sensible	/latent	Supply CFM	7,840	
FANHP (F.L.)	**6.18**	HP@	7,840	Total Cooling	328,500	258,000
RAFHP (F.L.)	**1.09**	HP@	5,535	Sensible Cooling	215,067	
FMEFF	**90%**	Percent		Air Side TD	25.40	
CFMREF	**7,840**	CFM		Supply HP	7.50	
DREFF	**97%**	Percent	(@F.L.)	T.S.P.	3.0	
MINVOL	**3,136**	CFM	CFM	Supply Fan Eff	60%	
Conv. Fact.	6,344	60	0.24	Return CFM	5,535	
Off Coil Conditions	57	21.46	28	Return T.S.P.	1.0	
Gas (BTU/CCF):	102,800	Heat Pipe Eff:	-	Return Fan HP	0.8	
kW/ton=	0.65			Return Fan Eff	80%	

Proposed Operation

Bin DB temp/ WetBulb	Average Temp	enthapy OA btu/lb	enthapy Mixed Air btu/lb	Bin hrs	SA air flow CFM	Fan kW	Fan kWh	OA air flow CFM	Discharge Air Temp	MAT Air Temp	Heat Pipe Air Temp DT °F	MAT Air Temp w/ Hpipe	Space Temp setpoint	Total Cooling BTU/Hr	Total Cooling kWh/year	Total Cooling Demand Tons	Total Heating BTU/Hr	Total Reheat BTU/Hr	Run Fraction	Proposed Heating CCF/year
-15 -11 / -12.6	-12.5	0.0		0	7,840	6.059	-	2,305	75.0°	47.2°	0.0°	47.2°	72°				235,756		100%	-
-10 -6 / -7.1	-7.5	0.0		0	7,840	6.059	-	2,305	75.0°	48.6°	0.0°	48.6°	72°				223,309		100%	-
-5 -1 /-2.9	-2.5	0.0		0	7,840	6.059	-	2,305	75.0°	50.1°	0.0°	50.1°	72°				210,862		100%	-
0-4/1	2.5	0.0		2	7,840	6.059	12	2,305	75.0°	51.6°	0.0°	51.6°	72°				198,415		77%	3.81
5-9/6	7.5	2.9		3	7,840	6.059	18	2,305	74.0°	53.0°	0.0°	53.0°	72°				177,501		72%	4.79
10-14/11	12.5	4.2		42	7,840	6.059	254	2,305	73.0°	54.5°	0.0°	54.5°	72°				156,587		67%	55.16
15-19/15	17.5	5.7		179	7,840	6.059	1,085	2,305	72.0°	56.0°	0.0°	56.0°	72°				135,672		62%	189.09
20-24/20	22.5	7.3		325	7,840	6.059	1,969	2,305	72.0°	57.4°	0.0°	57.4°	72°				123,225		58%	287.72
25-29/25	27.5	9.0		303	7,840	6.059	1,836	2,305	72.0°	58.9°	0.0°	58.9°	72°				110,778		53%	220.95
30-34/30	32.5	11.1		628	7,840	6.059	3,805	2,305	72.0°	60.4°	0.0°	60.4°	72°				98,331		48%	369.34
35-39/34	37.5	12.8		590	7,840	6.059	3,575	2,305	72.0°	61.9°	0.0°	61.9°	72°				85,884		43%	272.58
40-44/38	42.5	15.1		505	7,840	6.059	3,060	2,305	72.0°	63.3°	0.0°	63.3°	72°				73,437		38%	177.19
45-49/42	47.5	17.0		386	7,840	6.059	2,339	2,305	72.0°	64.8°	0.0°	64.8°	72°				60,990		35%	102.76
50-54/47	52.5	19.7	25.2	469	7,840	6.059	2,842	2,305	56.7°	66.3°	0.0°	66.3°	72°		-	-			15%	-
55-59/52	57.5	22.9	25.5	562	7,840	6.059	3,405	2,305	56.7°	67.7°	0.0°	67.7°	72°	143,234	1,901	11.94			44%	-
60-64/56	62.5	25.7	25.9	719	7,840	6.059	4,357	2,305	56.7°	69.2°	0.0°	69.2°	72°	155,876	2,881	12.99			47%	-
65-69/60	67.5	28.7	26.2	622	7,840	6.059	3,769	2,305	56.7°	70.7°	0.0°	70.7°	72°	168,518	2,913	14.04			51%	-
70-74/63	72.5	31.0	26.6	431	7,840	6.059	2,612	2,305	56.7°	72.1°	0.0°	72.1°	72°	181,161	2,332	15.10			55%	-
75-79/66	77.5	32.4	27.0	416	7,840	6.059	2,521	2,305	56.7°	73.6°	0.0°	73.6°	72°	193,803	2,576	16.15			59%	-
80-84/69	82.5	33.8	27.3	265	7,840	6.059	1,606	2,305	56.7°	75.1°	0.0°	75.1°	72°	206,446	1,862	17.20			63%	-
85-89/72	87.5	36.5	27.7	106	7,840	6.059	642	2,305	56.7°	76.6°	0.0°	76.6°	72°	219,088	839	18.26			67%	-
90-94/73	92.5	39.2	28.0	17	7,840	6.059	103	2,305	56.7°	78.0°	0.0°	78.0°	72°	231,731	151	19.31			71%	
				6,570.00			39,810								15,455	19.31				1,683

Title	**Control Upgrades**
ECM#	**7**
Project:	**SCI Houtzdale**
Site:	**SCI Houtzdale**
Unit #:	**AHU-35**

CONVERSION FACTORS				Design Conditions		
SLR	**63%**	Sensible	/latent	Supply CFM	18,800	
FANHP (F.L.)	**14.82**	HP@	18,800	Total Cooling	861,750	630,000
RAFHP (F.L.)	**-**	HP@	16,495	Sensible Cooling	540,086	
FMEFF	**91%**	Percent		Air Side TD	26.60	
CFMREF	**18,800**	CFM		Supply HP	20.0	
DREFF	**97%**	Percent	(@F.L.)	T.S.P.	3.0	
MINVOL	**7,520**	CFM	CFM	Supply Fan Eff	60%	
Conv. Fact.	6,344	60	0.24	Return CFM	16,495	
Off Coil Conditions	55	23.12		Return T.S.P.		
Gas (BTU/CCF):	102,800	Heat Pipe Eff:	-	Return Fan HP	-	
kW/ton=	0.65			Return Fan Eff	80%	

Existing Operation

Bin DB temp/ WetBulb	Average Temp	enthapy OA btu/lb	enthapy Mixed Air btu/lb	Bin hrs	SA air flow CFM	Fan kW	Fan kWh	OA air flow CFM	Discharge Air Temp	MAT Air Temp	Heat Pipe Air Temp DT °F	MAT Air Temp w/ Hpipe	Space Temp setpoint	Total Cooling BTU/Hr	Total Cooling kWh/year	Total Cooling Demand Tons	Total Heating BTU/Hr	Total Reheat BTU/Hr	Run Fraction	Existing Heating CCF/year
-15 -11 / -12.6	-12.5	0.0		0	18,800	12.102	-	2,305	75.0°	61.6°	0.0°	61.6°	72°				271,266		100%	-
-10 -6 / -7.1	-7.5	0.0		0	18,800	12.102	-	2,305	75.0°	62.3°	0.0°	62.3°	72°				258,819		100%	-
-5 -1 / -2.9	-2.5	0.0		0	18,800	12.102	-	2,305	75.0°	62.9°	0.0°	62.9°	72°				246,372		100%	-
0-4/1	2.5	0.0		2	18,800	12.102	24	2,305	75.0°	63.5°	0.0°	63.5°	72°				233,925		37%	2.17
5-9/6	7.5	2.9		5	18,800	12.102	61	2,305	75.0°	64.1°	0.0°	64.1°	72°				221,478		35%	4.86
10-14/11	12.5	4.2		77	17,860	11.713	902	2,190	75.0°	64.7°	0.0°	64.7°	72°				198,580		32%	60.11
15-19/15	17.5	5.7		270	16,920	11.301	3,051	2,075	75.0°	65.3°	0.0°	65.3°	72°				176,926		28%	167.31
20-24/20	22.5	7.3		452	15,980	10.889	4,922	1,959	75.0°	65.9°	0.0°	65.9°	72°				156,517		25%	219.20
25-29/25	27.5	9.0		411	15,980	10.889	4,475	1,959	75.0°	66.5°	0.0°	66.5°	72°				145,937		23%	173.28
30-34/30	32.5	11.1		897	15,980	10.889	9,767	1,959	75.0°	67.2°	0.0°	67.2°	72°				135,357		21%	325.33
35-39/34	37.5	12.8		808	15,980	10.889	8,798	1,959	75.0°	67.8°	0.0°	67.8°	72°				124,777		20%	249.03
40-44/38	42.5	15.1		722	15,980	10.889	7,862	1,959	75.0°	68.4°	0.0°	68.4°	72°		-	-	114,197		18%	186.39
45-49/42	47.5	17.0		512	15,980	10.889	5,575	1,959	75.0°	69.0°	0.0°	69.0°	72°		-	-	103,617		35%	231.57
50-54/47	52.5	19.7	26.0	659	15,980	10.889	7,176	1,959	55.1°	69.6°	0.0°	69.6°	72°	250,405	1,341	20.87	-		15%	-
55-59/52	57.5	22.9	26.1	829	15,980	10.889	9,027	1,959	55.1°	70.2°	0.0°	70.2°	72°	260,985	3,549	21.75	-		30%	-
60-64/56	62.5	25.7	26.3	1010	15,980	10.889	10,998	1,959	55.1°	70.8°	0.0°	70.8°	72°	271,565	4,682	22.63	-		32%	-
65-69/60	67.5	28.7	26.4	812	15,980	10.889	8,842	1,959	55.1°	71.4°	0.0°	71.4°	72°	282,145	4,063	23.51			33%	-
70-74/63	72.5	31.0	26.6	470	15,980	10.889	5,118	1,959	55.1°	72.1°	0.0°	72.1°	72°	292,725	2,531	24.39			34%	-
75-79/66	77.5	32.4	26.7	436	15,980	10.889	4,748	1,959	55.1°	72.7°	0.0°	72.7°	72°	303,305	2,521	25.28			35%	-
80-84/69	82.5	33.8	26.9	265	16,920	11.301	2,995	2,075	55.1°	73.3°	0.0°	73.3°	72°	332,349	1,840	27.70			39%	-
85-89/72	87.5	36.5	27.0	106	17,860	11.713	1,242	2,190	55.1°	73.9°	0.0°	73.9°	72°	362,637	876	30.22			42%	-
90-94/73	92.5	39.2	27.2	17	18,800	12.102	206	2,305	55.1°	74.5°	0.0°	74.5°	72°	394,170	166	32.85			46%	
				8,760.00			95,788								21,570	32.85				1,619

CONVERSION FACTORS				Design Conditions		
	63%	Sensible	/latent	Supply CFM	18,800	
FANHP (F.L.)	**14.82**	HP@	18,800	Total Cooling	861,750	630,000
RAFHP (F.L.)	**-**	HP@	16,495	Sensible Cooling	540,086	
FMEFF	**91%**	Percent		Air Side TD	26.60	
CFMREF	**18,800**	CFM		Supply HP	20.00	
DREFF	**97%**	Percent	(@F.L.)	T.S.P.	3.0	
MINVOL	**7,520**	CFM	CFM	Supply Fan Eff	65%	
Conv. Fact.	6,344	60	0.24	Return CFM	16,495	
Off Coil Conditions	55	23.12	28	Return T.S.P.		
Gas (BTU/CCF):	102,800	Heat Pipe Eff:	-	Return Fan HP	-	
kW/ton=	0.65			Return Fan Eff	60%	

Proposed Operation

Bin DB temp/ WetBulb	Average Temp	enthapy OA btu/lb	enthapy Mixed Air btu/lb	Bin hrs	SA air flow CFM	Fan kW	Fan kWh	OA air flow CFM	Discharge Air Temp	MAT Air Temp	Heat Pipe Air Temp DT °F	MAT Air Temp w/ Hpipe	Space Temp setpoint	Total Cooling BTU/Hr	Total Cooling kWh/year	Total Cooling Demand Tons	Total Heating BTU/Hr	Total Reheat BTU/Hr	Run Fraction	Proposed Heating CCF/year
-15 -11 / -12.6	-12.5	0.0		0	18,800	11.948	-	2,305	75.0°	61.6°	0.0°	61.6°	72°				271,266		100%	-
-10 -6 / -7.1	-7.5	0.0		0	18,800	11.948	-	2,305	75.0°	62.3°	0.0°	62.3°	72°				258,819		100%	-
-5 -1 / -2.9	-2.5	0.0		0	18,800	11.948	-	2,305	75.0°	62.9°	0.0°	62.9°	72°				246,372		100%	-
0-4/1	2.5	0.0		2	18,800	11.948	24	2,305	75.0°	63.5°	0.0°	63.5°	72°				233,925		37%	2.17
5-9/6	7.5	2.9		3	18,800	11.948	36	2,305	74.0°	64.1°	0.0°	64.1°	72°				201,174		35%	2.65
10-14/11	12.5	4.2		42	17,860	10.328	434	2,190	73.0°	64.7°	0.0°	64.7°	72°				160,002		32%	26.42
15-19/15	17.5	5.7		179	16,920	8.803	1,576	2,075	72.0°	65.3°	0.0°	65.3°	72°				122,105		28%	76.55
20-24/20	22.5	7.3		325	15,980	7.458	2,424	1,959	72.0°	65.9°	0.0°	65.9°	72°				104,742		25%	105.47
25-29/25	27.5	9.0		303	15,040	6.256	1,895	1,844	72.0°	66.5°	0.0°	66.5°	72°				88,623		23%	77.58
30-34/30	32.5	11.1		628	14,100	5.189	3,259	1,729	72.0°	67.2°	0.0°	67.2°	72°				73,748		21%	124.10
35-39/34	37.5	12.8		590	13,160	4.247	2,506	1,614	72.0°	67.8°	0.0°	67.8°	72°				60,119		20%	87.61
40-44/38	42.5	15.1		505	12,220	3.424	1,729	1,498	72.0°	68.4°	0.0°	68.4°	72°				47,734		18%	54.49
45-49/42	47.5	17.0		386	11,280	2.716	1,048	1,383	72.0°	69.0°	0.0°	69.0°	72°				36,594		35%	61.66
50-54/47	52.5	19.7	26.0	469	11,280	2.716	1,274	1,383	55.1°	69.6°	0.0°	69.6°	72°	176,757	674	14.73			15%	-
55-59/52	57.5	22.9	26.1	562	12,220	3.424	1,924	1,498	55.1°	70.2°	0.0°	70.2°	72°	199,577	1,840	16.63			30%	-
60-64/56	62.5	25.7	26.3	719	13,160	4.247	3,054	1,614	55.1°	70.8°	0.0°	70.8°	72°	223,642	2,745	18.64			32%	-
65-69/60	67.5	28.7	26.4	622	14,100	5.189	3,227	1,729	55.1°	71.4°	0.0°	71.4°	72°	248,951	2,746	20.75			33%	-
70-74/63	72.5	31.0	26.6	431	15,040	6.256	2,696	1,844	55.1°	72.1°	0.0°	72.1°	72°	275,506	2,185	22.96			34%	-
75-79/66	77.5	32.4	26.7	416	15,980	7.458	3,103	1,959	55.1°	72.7°	0.0°	72.7°	72°	303,305	2,405	25.28			35%	-
80-84/69	82.5	33.8	26.9	265	16,920	8.803	2,333	2,075	55.1°	73.3°	0.0°	73.3°	72°	332,349	1,840	27.70			39%	-
85-89/72	87.5	36.5	27.0	106	17,860	10.328	1,095	2,190	55.1°	73.9°	0.0°	73.9°	72°	362,637	876	30.22			42%	-
90-94/73	92.5	39.2	27.2	17	18,800	11.948	203	2,305	55.1°	74.5°	0.0°	74.5°	72°	394,170	166	32.85			46%	
				6,570.00			33,839								15,477	32.85				619

Title	**Control Upgrades**
ECM#	**7**
Project:	**SCI Houtzdale**
Site:	**SCI Houtzdale**
Unit #:	**AHU-36**

CONVERSION FACTORS				Design Conditions		
SLR	**71%**	Sensible	/latent	Supply CFM	13,000	
FANHP (F.L.)	**11.95**	HP@	13,000	Total Cooling	534,750	470,000
RAFHP (F.L.)	**3.61**	HP@	10,695	Sensible Cooling	381,888	
FMEFF	**91%**	Percent		Air Side TD	27.20	
CFMREF	**13,000**	CFM		Supply HP	15.0	
DREFF	**97%**	Percent	(@F.L.)	T.S.P.	3.5	
MINVOL	**5,200**	CFM	CFM	Supply Fan Eff	60%	
Conv. Fact.	6,344	60	0.24	Return CFM	10,695	
Off Coil Conditions	55	22.94		Return T.S.P.	1.5	
Gas (BTU/CCF):	102,800	Heat Pipe Eff:	-	Return Fan HP	3.0	
kW/ton=	0.65			Return Fan Eff	70%	

Existing Operation

Bin DB temp/ WetBulb	Average Temp	enthapy OA btu/lb	enthapy Mixed Air btu/lb	Bin hrs	SA air flow CFM	Fan kW	Fan kWh	OA air flow CFM	Discharge Air Temp	MAT Air Temp	Heat Pipe Air Temp DT °F	MAT Air Temp w/ Hpipe	Space Temp setpoint	Total Cooling BTU/Hr	Total Cooling kWh/year	Total Cooling Demand Tons	Total Heating BTU/Hr	Total Reheat BTU/Hr	Run Fraction	Existing Heating CCF/year
-15 -11 / -12.6	-12.5	0.0		0	13,000	12.832	-	2,305	75.0°	57.0°	0.0°	57.0°	72°				252,474		100%	-
-10 -6 / -7.1	-7.5	0.0		0	13,000	12.832	-	2,305	75.0°	57.9°	0.0°	57.9°	72°				240,027		100%	-
-5 -1 / -2.9	-2.5	0.0		0	13,000	12.832	-	2,305	75.0°	58.8°	0.0°	58.8°	72°				227,580		100%	-
0-4/1	2.5	0.0		2	13,000	12.832	26	2,305	75.0°	59.7°	0.0°	59.7°	72°				215,133		46%	2.46
5-9/6	7.5	2.9		5	13,000	12.832	64	2,305	75.0°	60.6°	0.0°	60.6°	72°				202,686		43%	5.45
10-14/11	12.5	4.2		77	13,000	12.832	988	2,305	75.0°	61.5°	0.0°	61.5°	72°				190,239		40%	73.94
15-19/15	17.5	5.7		270	13,000	12.832	3,465	2,305	75.0°	62.3°	0.0°	62.3°	72°				177,792		38%	226.47
20-24/20	22.5	7.3		452	13,000	12.832	5,800	2,305	75.0°	63.2°	0.0°	63.2°	72°				165,345		35%	327.90
25-29/25	27.5	9.0		411	13,000	12.832	5,274	2,305	75.0°	64.1°	0.0°	64.1°	72°				152,898		33%	254.95
30-34/30	32.5	11.1		897	13,000	12.832	11,510	2,305	75.0°	65.0°	0.0°	65.0°	72°				140,451		30%	469.52
35-39/34	37.5	12.8		808	13,000	12.832	10,368	2,305	75.0°	65.9°	0.0°	65.9°	72°				128,004		27%	351.30
40-44/38	42.5	15.1		722	13,000	12.832	9,265	2,305	75.0°	66.8°	0.0°	66.8°	72°		-	-	115,557		25%	255.83
45-49/42	47.5	17.0		512	13,000	12.832	6,570	2,305	75.0°	67.7°	0.0°	67.7°	72°		-	-	103,110		35%	230.44
50-54/47	52.5	19.7	25.7	659	13,000	12.832	8,456	2,305	54.8°	68.5°	0.0°	68.5°	72°	192,945	1,033	16.08	-		15%	-
55-59/52	57.5	22.9	25.9	829	13,000	12.832	10,638	2,305	54.8°	69.4°	0.0°	69.4°	72°	205,392	3,542	17.12	-		38%	-
60-64/56	62.5	25.7	26.1	1010	13,000	12.832	12,960	2,305	54.8°	70.3°	0.0°	70.3°	72°	217,839	4,855	18.15	-		41%	-
65-69/60	67.5	28.7	26.4	812	13,000	12.832	10,419	2,305	54.8°	71.2°	0.0°	71.2°	72°	230,286	4,362	19.19			43%	-
70-74/63	72.5	31.0	26.6	470	13,000	12.832	6,031	2,305	54.8°	72.1°	0.0°	72.1°	72°	242,733	2,805	20.23			45%	-
75-79/66	77.5	32.4	26.8	436	13,000	12.832	5,595	2,305	54.8°	73.0°	0.0°	73.0°	72°	255,180	2,876	21.26			48%	-
80-84/69	82.5	33.8	27.0	265	13,000	12.832	3,400	2,305	54.8°	73.9°	0.0°	73.9°	72°	267,627	1,923	22.30			50%	-
85-89/72	87.5	36.5	27.2	106	13,000	12.419	1,316	2,305	54.8°	74.7°	0.0°	74.7°	72°	280,074	842	23.34			52%	-
90-94/73	92.5	39.2	27.4	17	13,000	12.832	218	2,305	54.8°	75.6°	0.0°	75.6°	72°	292,521	147	24.38			55%	
				8,760.00			112,362								22,385	24.38				2,198

CONVERSION FACTORS				Design Conditions		
	71%	Sensible	/latent	Supply CFM	13,000	
FANHP (F.L.)	**11.95**	HP@	13,000	Total Cooling	534,750	470,000
RAFHP (F.L.)	**3.61**	HP@	10,695	Sensible Cooling	381,888	
FMEFF	**91%**	Percent		Air Side TD	27.20	
CFMREF	**13,000**	CFM		Supply HP	15.00	
DREFF	**97%**	Percent	(@F.L.)	T.S.P.	3.5	
MINVOL	**5,200**	CFM	CFM	Supply Fan Eff	60%	
Conv. Fact.	6,344	60	0.24	Return CFM	10,695	
Off Coil Conditions	55	22.94	28	Return T.S.P.	1.5	
Gas (BTU/CCF):	102,800	Heat Pipe Eff:	-	Return Fan HP	3.0	
kW/ton=	0.65			Return Fan Eff	70%	

Proposed Operation

Bin DB temp/ WetBulb	Average Temp	enthapy OA btu/lb	enthapy Mixed Air btu/lb	Bin hrs	SA air flow CFM	Fan kW	Fan kWh	OA air flow CFM	Discharge Air Temp	MAT Air Temp	Heat Pipe Air Temp DT °F	MAT Air Temp w/ Hpipe	Space Temp setpoint	Total Cooling BTU/Hr	Total Cooling kWh/year	Total Cooling Demand Tons	Total Heating BTU/Hr	Total Reheat BTU/Hr	Run Fraction	Proposed Heating CCF/year
-15 -11 / -12.6	-12.5	0.0		0	13,000	12.669	-	2,305	75.0°	57.0°	0.0°	57.0°	72°				252,474		100%	-
-10 -6 / -7.1	-7.5	0.0		0	13,000	12.669	-	2,305	75.0°	57.9°	0.0°	57.9°	72°				240,027		100%	-
-5 -1 / -2.9	-2.5	0.0		0	13,000	12.669	-	2,305	75.0°	58.8°	0.0°	58.8°	72°				227,580		100%	-
0-4/1	2.5	0.0		2	13,000	12.669	25	2,305	75.0°	59.7°	0.0°	59.7°	72°				215,133		46%	2.46
5-9/6	7.5	2.9		3	13,000	12.669	38	2,305	74.0°	60.6°	0.0°	60.6°	72°				188,646		43%	3.04
10-14/11	12.5	4.2		42	12,350	10.951	460	2,190	73.0°	61.5°	0.0°	61.5°	72°				154,051		40%	32.66
15-19/15	17.5	5.7		179	11,700	9.333	1,671	2,075	72.0°	62.3°	0.0°	62.3°	72°				122,105		38%	103.11
20-24/20	22.5	7.3		325	11,050	7.908	2,570	1,959	72.0°	63.2°	0.0°	63.2°	72°				104,742		35%	149.35
25-29/25	27.5	9.0		303	10,400	6.633	2,010	1,844	72.0°	64.1°	0.0°	64.1°	72°				88,623		33%	108.94
30-34/30	32.5	11.1		628	9,750	5.502	3,455	1,729	72.0°	65.0°	0.0°	65.0°	72°				73,748		30%	172.60
35-39/34	37.5	12.8		590	9,100	4.503	2,657	1,614	72.0°	65.9°	0.0°	65.9°	72°				60,119		27%	120.48
40-44/38	42.5	15.1		505	8,450	3.630	1,833	1,498	72.0°	66.8°	0.0°	66.8°	72°				47,734		25%	73.92
45-49/42	47.5	17.0		386	7,800	2.880	1,112	1,383	72.0°	67.7°	0.0°	67.7°	72°				36,594		35%	61.66
50-54/47	52.5	19.7	25.7	469	7,800	2.880	1,351	1,383	54.8°	68.5°	0.0°	68.5°	72°	115,767	441	9.65			15%	-
55-59/52	57.5	22.9	25.9	562	8,450	3.630	2,040	1,498	54.8°	69.4°	0.0°	69.4°	72°	133,505	1,561	11.13			38%	-
60-64/56	62.5	25.7	26.1	719	9,100	4.503	3,238	1,614	54.8°	70.3°	0.0°	70.3°	72°	152,487	2,419	12.71			41%	-
65-69/60	67.5	28.7	26.4	622	9,750	5.502	3,422	1,729	54.8°	71.2°	0.0°	71.2°	72°	172,714	2,506	14.39			43%	-
70-74/63	72.5	31.0	26.6	431	10,400	6.633	2,859	1,844	54.8°	72.1°	0.0°	72.1°	72°	194,186	2,058	16.18			45%	-
75-79/66	77.5	32.4	26.8	416	11,050	7.908	3,290	1,959	54.8°	73.0°	0.0°	73.0°	72°	216,903	2,332	18.08			48%	-
80-84/69	82.5	33.8	27.0	265	11,700	9.333	2,473	2,075	54.8°	73.9°	0.0°	73.9°	72°	240,864	1,730	20.07			50%	-
85-89/72	87.5	36.5	27.2	106	12,350	10.951	1,161	2,190	54.8°	74.7°	0.0°	74.7°	72°	266,070	800	22.17			52%	-
90-94/73	92.5	39.2	27.4	17	13,000	12.669	215	2,305	54.8°	75.6°	0.0°	75.6°	72°	292,521	147	24.38			55%	
				6,570.00			35,880								13,995	24.38				828

Title	**Control Upgrades**
ECM#	**7**
Project:	**SCI Houtzdale**
Site:	**SCI Houtzdale**
Unit #:	**AHU-37**

CONVERSION FACTORS				Design Conditions		
SLR	**76%**	Sensible	/latent	Supply CFM	8,825	
FANHP (F.L.)	**8.11**	HP@	8,825	Total Cooling	315,750	124,000
RAFHP (F.L.)	**2.20**	HP@	6,520	Sensible Cooling	239,228	
FMEFF	**90%**	Percent		Air Side TD	25.10	
CFMREF	**8,825**	CFM		Supply HP	10.0	
DREFF	**97%**	Percent	(@F.L.)	T.S.P.	3.5	
MINVOL	**3,530**	CFM	CFM	Supply Fan Eff	60%	
Conv. Fact.	6,344	60	0.24	Return CFM	6,520	
Off Coil Conditions	55	22.82		Return T.S.P.	1.5	
Gas (BTU/CCF):	102,800	Heat Pipe Eff:	-	Return Fan HP	3.0	
kW/ton=	0.65			Return Fan Eff	70%	

Existing Operation

Bin DB temp/ WetBulb	Average Temp	enthapy OA btu/lb	enthapy Mixed Air btu/lb	Bin hrs	SA air flow CFM	Fan kW	Fan kWh	OA air flow CFM	Discharge Air Temp	MAT Air Temp	Heat Pipe Air Temp DT °F	MAT Air Temp w/ Hpipe	Space Temp setpoint	Total Cooling BTU/Hr	Total Cooling kWh/year	Total Cooling Demand Tons	Total Heating BTU/Hr	Total Reheat BTU/Hr	Run Fraction	Existing Heating CCF/year
-15 -11 / -12.6	-12.5	0.0		0	8,825	8.599	-	2,305	75.0°	49.9°	0.0°	49.9°	72°				124,000		100%	-
-10 -6 / -7.1	-7.5	0.0		0	8,825	8.599	-	2,305	75.0°	51.2°	0.0°	51.2°	72°				124,000		100%	-
-5 -1 / -2.9	-2.5	0.0		0	8,825	8.599	-	2,305	75.0°	52.5°	0.0°	52.5°	72°				124,000		100%	-
0-4/1	2.5	0.0		2	8,825	8.599	17	2,305	75.0°	53.8°	0.0°	53.8°	72°				124,000		100%	3.09
5-9/6	7.5	2.9		5	8,825	8.599	43	2,305	75.0°	55.2°	0.0°	55.2°	72°				124,000		100%	7.73
10-14/11	12.5	4.2		77	8,825	8.599	662	2,305	75.0°	56.5°	0.0°	56.5°	72°				124,000		100%	119.08
15-19/15	17.5	5.7		270	8,825	8.599	2,322	2,305	75.0°	57.8°	0.0°	57.8°	72°				124,000		100%	417.54
20-24/20	22.5	7.3		452	8,825	8.599	3,887	2,305	75.0°	59.1°	0.0°	59.1°	72°				124,000		100%	698.99
25-29/25	27.5	9.0		411	8,825	8.599	3,534	2,305	75.0°	60.4°	0.0°	60.4°	72°				124,000		100%	635.59
30-34/30	32.5	11.1		897	8,825	8.599	7,714	2,305	75.0°	61.7°	0.0°	61.7°	72°				124,000		100%	1,387.16
35-39/34	37.5	12.8		808	8,825	8.599	6,948	2,305	75.0°	63.0°	0.0°	63.0°	72°				114,477		92%	1,064.98
40-44/38	42.5	15.1		722	8,825	8.599	6,209	2,305	75.0°	64.3°	0.0°	64.3°	72°		-	-	102,030		82%	755.94
45-49/42	47.5	17.0		512	8,825	8.599	4,403	2,305	75.0°	65.6°	0.0°	65.6°	72°		-	-	89,583		35%	200.21
50-54/47	52.5	19.7	25.3	659	8,825	8.599	5,667	2,305	54.5°	66.9°	0.0°	66.9°	72°	118,249	633	9.85	-		15%	-
55-59/52	57.5	22.9	25.6	829	8,825	8.599	7,129	2,305	54.5°	68.2°	0.0°	68.2°	72°	130,696	2,429	10.89	-		41%	-
60-64/56	62.5	25.7	26.0	1010	8,825	8.599	8,685	2,305	54.5°	69.5°	0.0°	69.5°	72°	143,143	3,550	11.93	-		45%	-
65-69/60	67.5	28.7	26.3	812	8,825	8.599	6,983	2,305	54.5°	70.8°	0.0°	70.8°	72°	155,590	3,372	12.97			49%	-
70-74/63	72.5	31.0	26.6	470	8,825	8.599	4,042	2,305	54.5°	72.1°	0.0°	72.1°	72°	168,037	2,277	14.00			53%	-
75-79/66	77.5	32.4	26.9	436	8,825	8.599	3,749	2,305	54.5°	73.4°	0.0°	73.4°	72°	180,484	2,436	15.04			57%	-
80-84/69	82.5	33.8	27.2	265	8,825	8.599	2,279	2,305	54.5°	74.7°	0.0°	74.7°	72°	192,931	1,692	16.08			61%	-
85-89/72	87.5	36.5	27.5	106	8,825	8.599	912	2,305	54.5°	76.0°	0.0°	76.0°	72°	205,378	767	17.11			65%	-
90-94/73	92.5	39.2	27.9	17	8,825	8.599	146	2,305	54.5°	77.4°	0.0°	77.4°	72°	217,825	138	18.15			69%	
				8,760.00			75,330								17,295	18.15				5,290

CONVERSION FACTORS				Design Conditions		
	76%	Sensible	/latent	Supply CFM	8,825	
FANHP (F.L.)	**8.11**	HP@	8,825	Total Cooling	315,750	124,000
RAFHP (F.L.)	**2.20**	HP@	6,520	Sensible Cooling	239,228	
FMEFF	**90%**	Percent		Air Side TD	25.10	
CFMREF	**8,825**	CFM		Supply HP	10.00	
DREFF	**97%**	Percent	(@F.L.)	T.S.P.	3.5	
MINVOL	**3,530**	CFM	CFM	Supply Fan Eff	60%	
Conv. Fact.	6,344	60	0.24	Return CFM	6,520	
Off Coil Conditions	55	22.82	28	Return T.S.P.	1.5	
Gas (BTU/CCF):	102,800	Heat Pipe Eff:	-	Return Fan HP	3.0	
kW/ton=	0.65			Return Fan Eff	70%	

Proposed Operation

Bin DB temp/ WetBulb	Average Temp	enthapy OA btu/lb	enthapy Mixed Air btu/lb	Bin hrs	SA air flow CFM	Fan kW	Fan kWh	OA air flow CFM	Discharge Air Temp	MAT Air Temp	Heat Pipe Air Temp DT °F	MAT Air Temp w/ Hpipe	Space Temp setpoint	Total Cooling BTU/Hr	Total Cooling kWh/year	Total Cooling Demand Tons	Total Heating BTU/Hr	Total Reheat BTU/Hr	Run Fraction	Proposed Heating CCF/year
-15 -11 / -12.6	-12.5	0.0		0	8,825	8.599	-	2,305	75.0°	49.9°	0.0°	49.9°	72°				124,000		100%	-
-10 -6 / -7.1	-7.5	0.0		0	8,825	8.599	-	2,305	75.0°	51.2°	0.0°	51.2°	72°				124,000		100%	-
-5 -1 / -2.9	-2.5	0.0		0	8,825	8.599	-	2,305	75.0°	52.5°	0.0°	52.5°	72°				124,000		100%	-
0-4/1	2.5	0.0		2	8,825	8.599	17	2,305	75.0°	53.8°	0.0°	53.8°	72°				124,000		100%	3.09
5-9/6	7.5	2.9		3	8,825	8.599	26	2,305	74.0°	55.2°	0.0°	55.2°	72°				124,000		100%	4.64
10-14/11	12.5	4.2		42	8,825	8.599	361	2,305	73.0°	56.5°	0.0°	56.5°	72°				124,000		100%	64.95
15-19/15	17.5	5.7		179	8,825	8.599	1,539	2,305	72.0°	57.8°	0.0°	57.8°	72°				124,000		100%	276.81
20-24/20	22.5	7.3		325	8,825	8.599	2,795	2,305	72.0°	59.1°	0.0°	59.1°	72°				123,225		100%	499.45
25-29/25	27.5	9.0		303	8,825	8.599	2,606	2,305	72.0°	60.4°	0.0°	60.4°	72°				110,778		100%	418.61
30-34/30	32.5	11.1		628	8,825	8.599	5,400	2,305	72.0°	61.7°	0.0°	61.7°	72°				98,331		100%	770.13
35-39/34	37.5	12.8		590	8,825	8.599	5,074	2,305	72.0°	63.0°	0.0°	63.0°	72°				85,884		92%	583.41
40-44/38	42.5	15.1		505	8,825	8.599	4,343	2,305	72.0°	64.3°	0.0°	64.3°	72°				73,437		82%	380.56
45-49/42	47.5	17.0		386	8,825	8.599	3,319	2,305	72.0°	65.6°	0.0°	65.6°	72°				60,990		35%	102.76
50-54/47	52.5	19.7	25.3	469	8,825	8.599	4,033	2,305	54.5°	66.9°	0.0°	66.9°	72°	118,249	451	9.85			15%	-
55-59/52	57.5	22.9	25.6	562	8,825	8.599	4,833	2,305	54.5°	68.2°	0.0°	68.2°	72°	130,696	1,647	10.89			41%	-
60-64/56	62.5	25.7	26.0	719	8,825	8.599	6,183	2,305	54.5°	69.5°	0.0°	69.5°	72°	143,143	2,527	11.93			45%	-
65-69/60	67.5	28.7	26.3	622	8,825	8.599	5,349	2,305	54.5°	70.8°	0.0°	70.8°	72°	155,590	2,583	12.97			49%	-
70-74/63	72.5	31.0	26.6	431	8,825	8.599	3,706	2,305	54.5°	72.1°	0.0°	72.1°	72°	168,037	2,088	14.00			53%	-
75-79/66	77.5	32.4	26.9	416	8,825	8.599	3,577	2,305	54.5°	73.4°	0.0°	73.4°	72°	180,484	2,325	15.04			57%	-
80-84/69	82.5	33.8	27.2	265	8,825	8.599	2,279	2,305	54.5°	74.7°	0.0°	74.7°	72°	192,931	1,692	16.08			61%	-
85-89/72	87.5	36.5	27.5	106	8,825	8.599	912	2,305	54.5°	76.0°	0.0°	76.0°	72°	205,378	767	17.11			65%	-
90-94/73	92.5	39.2	27.9	17	8,825	8.599	146	2,305	54.5°	77.4°	0.0°	77.4°	72°	217,825	138	18.15			69%	
				6,570.00			56,498								14,218	18.15				3,104

Title	**Control Upgrades**
ECM#	**7**
Project:	**SCI Houtzdale**
Site:	**SCI Houtzdale**
Unit #:	**AHU-38**

CONVERSION FACTORS				Design Conditions		
SLR	**74%**	Sensible	/latent	Supply CFM	15,350	
FANHP (F.L.)	**14.11**	HP@	15,350	Total Cooling	578,250	150,000
RAFHP (F.L.)	**4.41**	HP@	13,045	Sensible Cooling	426,055	
FMEFF	**91%**	Percent		Air Side TD	25.70	
CFMREF	**15,350**	CFM		Supply HP	20.0	
DREFF	**97%**	Percent	(@F.L.)	T.S.P.	3.5	
MINVOL	**6,140**	CFM	CFM	Supply Fan Eff	60%	
Conv. Fact.	6,344	60	0.24	Return CFM	13,045	
Off Coil Conditions	54	22.94		Return T.S.P.	1.5	
Gas (BTU/CCF):	102,800	Heat Pipe Eff:	-	Return Fan HP	5.0	
kW/ton=	0.65			Return Fan Eff	70%	

Existing Operation

Bin DB temp/ WetBulb	Average Temp	enthapy OA btu/lb	enthapy Mixed Air btu/lb	Bin hrs	SA air flow CFM	Fan kW	Fan kWh	OA air flow CFM	Discharge Air Temp	MAT Air Temp	Heat Pipe Air Temp DT °F	MAT Air Temp w/ Hpipe	Space Temp setpoint	Total Cooling BTU/Hr	Total Cooling kWh/year	Total Cooling Demand Tons	Total Heating BTU/Hr	Total Reheat BTU/Hr	Run Fraction	Existing Heating CCF/year
-15 -11 / -12.6	-12.5	0.0		0	15,350	15.271	-	2,305	75.0°	59.3°	0.0°	59.3°	72°				150,000		100%	-
-10 -6 / -7.1	-7.5	0.0		0	15,350	15.271	-	2,305	75.0°	60.1°	0.0°	60.1°	72°				150,000		100%	-
-5 -1 / -2.9	-2.5	0.0		0	15,350	15.271	-	2,305	75.0°	60.8°	0.0°	60.8°	72°				150,000		100%	-
0-4/1	2.5	0.0		2	15,350	15.271	31	2,305	75.0°	61.6°	0.0°	61.6°	72°				150,000		100%	3.74
5-9/6	7.5	2.9		5	15,350	15.271	76	2,305	75.0°	62.3°	0.0°	62.3°	72°				150,000		100%	9.35
10-14/11	12.5	4.2		77	14,583	14.780	1,138	2,190	75.0°	63.1°	0.0°	63.1°	72°				150,000		100%	144.04
15-19/15	17.5	5.7		270	13,815	14.260	3,850	2,075	75.0°	63.8°	0.0°	63.8°	72°				150,000		100%	505.09
20-24/20	22.5	7.3		452	13,048	13.740	6,211	1,959	75.0°	64.6°	0.0°	64.6°	72°				147,015		98%	812.24
25-29/25	27.5	9.0		411	12,280	13.209	5,429	1,844	75.0°	65.3°	0.0°	65.3°	72°				128,410		86%	563.46
30-34/30	32.5	11.1		897	11,513	12.667	11,362	1,729	75.0°	66.1°	0.0°	66.1°	72°				111,049		74%	919.69
35-39/34	37.5	12.8		808	10,745	12.111	9,786	1,614	75.0°	66.8°	0.0°	66.8°	72°				94,933		63%	605.43
40-44/38	42.5	15.1		722	9,978	11.540	8,332	1,498	75.0°	67.6°	0.0°	67.6°	72°		-	-	80,061		53%	384.77
45-49/42	47.5	17.0		512	9,210	10.956	5,610	1,383	75.0°	68.3°	0.0°	68.3°	72°		-	-	66,435		35%	148.47
50-54/47	52.5	19.7	25.8	659	9,210	10.956	7,220	1,383	54.0°	69.1°	0.0°	69.1°	72°	149,916	803	12.49	-		15%	-
55-59/52	57.5	22.9	26.0	829	9,978	11.540	9,567	1,498	54.0°	69.8°	0.0°	69.8°	72°	170,500	2,257	14.21	-		29%	-
60-64/56	62.5	25.7	26.2	1010	10,745	12.111	12,232	1,614	54.0°	70.6°	0.0°	70.6°	72°	192,328	3,500	16.03	-		33%	-
65-69/60	67.5	28.7	26.4	812	11,513	12.667	10,286	1,729	54.0°	71.3°	0.0°	71.3°	72°	215,401	3,529	17.95			37%	-
70-74/63	72.5	31.0	26.6	470	12,280	13.209	6,208	1,844	54.0°	72.1°	0.0°	72.1°	72°	239,719	2,530	19.98			41%	-
75-79/66	77.5	32.4	26.8	436	13,048	13.740	5,991	1,959	54.0°	72.8°	0.0°	72.8°	72°	265,281	2,874	22.11			46%	-
80-84/69	82.5	33.8	26.9	265	13,815	14.260	3,779	2,075	54.0°	73.6°	0.0°	73.6°	72°	292,088	2,118	24.34			51%	-
85-89/72	87.5	36.5	27.1	106	14,583	14.780	1,567	2,190	54.0°	74.3°	0.0°	74.3°	72°	320,140	1,018	26.68			55%	-
90-94/73	92.5	39.2	27.3	17	15,350	15.271	260	2,305	54.0°	75.1°	0.0°	75.1°	72°	349,437	194	29.12			60%	
				8,760.00			108,933								18,823	29.12				4,096

CONVERSION FACTORS				Design Conditions		
	74%	Sensible	/latent	Supply CFM	15,350	
FANHP (F.L.)	**14.11**	HP@	15,350	Total Cooling	578,250	150,000
RAFHP (F.L.)	**4.41**	HP@	13,045	Sensible Cooling	426,055	
FMEFF	**91%**	Percent		Air Side TD	25.70	
CFMREF	**15,350**	CFM		Supply HP	20.00	
DREFF	**97%**	Percent	(@F.L.)	T.S.P.	3.5	
MINVOL	**6,140**	CFM	CFM	Supply Fan Eff	60%	
Conv. Fact.	6,344	60	0.24	Return CFM	13,045	
Off Coil Conditions	54	22.94	28	Return T.S.P.	1.5	
Gas (BTU/CCF):	102,800	Heat Pipe Eff:	-	Return Fan HP	5.0	
kW/ton=	0.65			Return Fan Eff	70%	

Proposed Operation

Bin DB temp/ WetBulb	Average Temp	enthapy OA btu/lb	enthapy Mixed Air btu/lb	Bin hrs	SA air flow CFM	Fan kW	Fan kWh	OA air flow CFM	Discharge Air Temp	MAT Air Temp	Heat Pipe Air Temp DT °F	MAT Air Temp w/ Hpipe	Space Temp setpoint	Total Cooling BTU/Hr	Total Cooling kWh/year	Total Cooling Demand Tons	Total Heating BTU/Hr	Total Reheat BTU/Hr	Run Fraction	Proposed Heating CCF/year
-15 -11 / -12.6	-12.5	0.0		0	15,350	15.077	-	2,305	75.0°	59.3°	0.0°	59.3°	72°				150,000		100%	-
-10 -6 / -7.1	-7.5	0.0		0	15,350	15.077	-	2,305	75.0°	60.1°	0.0°	60.1°	72°				150,000		100%	-
-5 -1 / -2.9	-2.5	0.0		0	15,350	15.077	-	2,305	75.0°	60.8°	0.0°	60.8°	72°				150,000		100%	-
0-4/1	2.5	0.0		2	15,350	15.077	30	2,305	75.0°	61.6°	0.0°	61.6°	72°				150,000		100%	3.74
5-9/6	7.5	2.9		5	15,350	15.077	75	2,305	74.0°	62.3°	0.0°	62.3°	72°				150,000		100%	9.35
10-14/11	12.5	4.2		77	14,583	13.032	1,003	2,190	73.0°	63.1°	0.0°	63.1°	72°				150,000		100%	144.04
15-19/15	17.5	5.7		270	13,815	11.108	2,999	2,075	72.0°	63.8°	0.0°	63.8°	72°				122,105		100%	411.16
20-24/20	22.5	7.3		452	13,048	9.411	4,254	1,959	72.0°	64.6°	0.0°	64.6°	72°				104,742		98%	578.68
25-29/25	27.5	9.0		411	12,280	7.894	3,244	1,844	72.0°	65.3°	0.0°	65.3°	72°				88,623		86%	388.87
30-34/30	32.5	11.1		897	11,513	6.547	5,873	1,729	72.0°	66.1°	0.0°	66.1°	72°				73,748		74%	610.77
35-39/34	37.5	12.8		808	10,745	5.359	4,330	1,614	72.0°	66.8°	0.0°	66.8°	72°				60,119		63%	383.41
40-44/38	42.5	15.1		722	9,978	4.320	3,119	1,498	72.0°	67.6°	0.0°	67.6°	72°				47,734		53%	229.41
45-49/42	47.5	17.0		512	9,210	3.427	1,755	1,383	72.0°	68.3°	0.0°	68.3°	72°				36,594		35%	81.78
50-54/47	52.5	19.7	25.8	659	9,210	3.427	2,259	1,383	54.0°	69.1°	0.0°	69.1°	72°	149,916	803	12.49			15%	-
55-59/52	57.5	22.9	26.0	829	9,978	4.320	3,582	1,498	54.0°	69.8°	0.0°	69.8°	72°	170,500	2,257	14.21			29%	-
60-64/56	62.5	25.7	26.2	1010	10,745	5.359	5,413	1,614	54.0°	70.6°	0.0°	70.6°	72°	192,328	3,500	16.03			33%	-
65-69/60	67.5	28.7	26.4	812	11,513	6.547	5,317	1,729	54.0°	71.3°	0.0°	71.3°	72°	215,401	3,529	17.95			37%	-
70-74/63	72.5	31.0	26.6	470	12,280	7.894	3,710	1,844	54.0°	72.1°	0.0°	72.1°	72°	239,719	2,530	19.98			41%	-
75-79/66	77.5	32.4	26.8	436	13,048	9.411	4,103	1,959	54.0°	72.8°	0.0°	72.8°	72°	265,281	2,874	22.11			46%	-
80-84/69	82.5	33.8	26.9	265	13,815	11.108	2,943	2,075	54.0°	73.6°	0.0°	73.6°	72°	292,088	2,118	24.34			51%	-
85-89/72	87.5	36.5	27.1	106	14,583	13.032	1,381	2,190	54.0°	74.3°	0.0°	74.3°	72°	320,140	1,018	26.68			55%	-
90-94/73	92.5	39.2	27.3	17	15,350	15.077	256	2,305	54.0°	75.1°	0.0°	75.1°	72°	349,437	194	29.12			60%	
				8,760.00			55,648								18,823	29.12				2,841

Title	**Control Upgrades**
ECM#	**7**
Project:	**SCI Houtzdale**
Site:	**SCI Houtzdale**
Unit #:	**I&J 1,2,4, &5**

CONVERSION FACTORS				Design Conditions		
SLR	**69%**	Sensible	/latent	Supply CFM	9,200	
FANHP (F.L.)	**5.92**	HP@	9,200	Total Cooling	288,000	300,000
RAFHP (F.L.)	-	HP@	7,360	Sensible Cooling	198,720	
FMEFF	**90%**	Percent		Air Side TD	20.00	
CFMREF	**9,200**	CFM		Supply HP	8	
DREFF	**97%**	Percent	(@F.L.)	T.S.P.	2.5	
MINVOL	**3,680**	CFM	CFM	Supply Fan Eff	60%	
Conv. Fact.	6,344	60	0.24	Return CFM	7,360	
Off Coil Conditions	55	26.34	28	Return T.S.P.	-	
Btu/CCF	102,800	Heat EX Eff Wtr:		Return Fan HP		
kW/Ton	1.20	Heat EX Eff Smr:		Return Fan Eff	60%	

Existing Operation

Bin DB temp/ WetBulb	Average Temp	enthapy OA btu/lb	enthapy Mixed Air btu/lb	Bin hrs	SA air flow CFM	Fan kW	Fan kWh	OA air flow CFM	Discharge Air Temp	MAT Air Temp	Heat Pipe Air Temp DT °F	MAT Air Temp w/ Hpipe	Space Temp setpoint	Total Cooling BTU/Hr	Total Cooling kWh/year	Total Cooling Demand Tons	Total Heating BTU/Hr	Total Reheat BTU/Hr	Run Fraction	Existing Heating CCF/year
-15 -11 / -12.6	-12.5	0.0		0	9,200	4.936	-	1,840	75.0°	55.1°	0.0°	55.1°	72°				197,726		100%	-
-10 -6 / -7.1	-7.5	0.0		0	9,200	4.936	-	1,840	75.0°	56.1°	0.0°	56.1°	72°				187,790		100%	-
-5 -1 / -2.9	-2.5	0.0		0	9,200	4.936	-	1,840	75.0°	57.1°	0.0°	57.1°	72°				177,854		100%	-
0-4/1	2.5	0.0		2	9,200	4.936	10	1,840	75.0°	58.1°	0.0°	58.1°	72°				167,918		56%	2.34
5-9/6	7.5	2.9		5	9,200	4.936	25	1,840	75.0°	59.1°	0.0°	59.1°	72°				157,982		53%	5.19
10-14/11	12.5	4.2		77	9,200	4.936	380	1,840	75.0°	60.1°	0.0°	60.1°	72°				148,046		49%	70.16
15-19/15	17.5	5.7		270	9,200	4.936	1,333	1,840	75.0°	61.1°	0.0°	61.1°	72°				138,110		46%	214.10
20-24/20	22.5	7.3		452	9,200	4.936	2,231	1,840	75.0°	62.1°	0.0°	62.1°	72°				128,174		43%	308.70
25-29/25	27.5	9.0		411	9,200	4.936	2,029	1,840	75.0°	63.1°	0.0°	63.1°	72°				118,238		39%	238.86
30-34/30	32.5	11.1		897	9,200	4.936	4,427	1,840	75.0°	64.1°	0.0°	64.1°	72°				108,302		36%	437.38
35-39/34	37.5	12.8		808	9,200	4.936	3,988	1,840	75.0°	65.1°	0.0°	65.1°	72°				98,366		33%	325.01
40-44/38	42.5	15.1		722	9,200	4.936	3,564	1,840	75.0°	66.1°	0.0°	66.1°	72°				88,430		29%	234.71
45-49/42	47.5	17.0		512	9,200	4.936	2,527	1,840	75.0°	67.1°	0.0°	67.1°	72°				78,494		40%	200.48
50-54/47	52.5	19.7	25.6	659	9,200	4.936	3,253	1,840	55.0°	68.1°	0.0°	68.1°	72°	130,162	3,877	10.85	-		45%	
55-59/52	57.5	22.9	25.9	829	9,200	4.936	4,092	1,840	55.0°	69.1°	0.0°	69.1°	72°	140,098	5,650	11.67	-		49%	
60-64/56	62.5	25.7	26.1	1010	9,200	4.936	4,985	1,840	55.0°	70.1°	0.0°	70.1°	72°	150,034	7,894	12.50	-		52%	
65-69/60	67.5	28.7	26.3	812	9,200	4.936	4,008	1,840	55.0°	71.1°	0.0°	71.1°	72°	159,970	7,215	13.33			56%	
70-74/63	72.5	31.0	26.6	470	9,200	4.936	2,320	1,840	55.0°	72.1°	0.0°	72.1°	72°	169,906	4,711	14.16			59%	
75-79/66	77.5	32.4	26.8	436	9,200	4.936	2,152	1,840	55.0°	73.1°	0.0°	73.1°	72°	179,842	4,896	14.99			62%	
80-84/69	82.5	33.8	27.1	265	9,200	4.936	1,308	1,840	55.0°	74.1°	0.0°	74.1°	72°	189,778	3,314	15.81			66%	
85-89/72	87.5	36.5	27.3	106	9,200	4.936	523	1,840	55.0°	75.1°	0.0°	75.1°	72°	199,714	1,468	16.64			69%	
90-94/73	92.5	39.2	27.6	17	9,200	4.936	84	1,840	55.0°	76.1°	0.0°	76.1°	72°	209,650	259	17.47			73%	
				8,760.00			43,237								39,284	17.47				2,037

CONVERSION FACTORS				Design Conditions		
	69%	Sensible	/latent	Supply CFM	9,200	
FANHP (F.L.)	**5.92**	HP@	9,200	Total Cooling	288,000	300,000
RAFHP (F.L.)	-	HP@	7,360	Sensible Cooling	198,720	
FMEFF	**90%**	Percent		Air Side TD	20.00	
CFMREF	**9,200**	CFM		Supply HP	8	
DREFF	**97%**	Percent	(@F.L.)	T.S.P.	2.5	
MINVOL	**3,680**	CFM	CFM	Supply Fan Eff	60%	
Conv. Fact.	6,344	60	0.24	Return CFM	7,360	
Off Coil Conditions	55	26.34	28	Return T.S.P.	-	
Ht Pmp COP	102,800	Heat EX Eff Wtr:		Return Fan HP		
kW/Ton	1.20	Heat EX Eff Smr:		Return Fan Eff	60%	

Bin DB temp/ WetBulb	Average Temp	enthapy OA btu/lb	enthapy Mixed Air btu/lb	Bin hrs	SA air flow CFM	Fan kW	Fan kWh	OA air flow CFM	Discharge Air Temp	MAT Air Temp	Heat Pipe Air Temp DT °F	MAT Air Temp w/ Hpipe	Space Temp setpoint	Total Cooling BTU/Hr	Total Cooling kWh/year	Total Cooling Demand Tons	Total Heating BTU/Hr	Total Reheat BTU/Hr	Run Fraction	Proposed Heating CCF/year
-15 -11 / -12.6	-12.5	0.0		0	9,200	4.936	-	1,840	75.0°	55.1°	0.0°	55.1°	72°				197,726		100%	-
-10 -6 / -7.1	-7.5	0.0		0	9,200	4.936	-	1,840	75.0°	56.1°	0.0°	56.1°	72°				187,790		100%	-
-5 -1 / -2.9	-2.5	0.0		0	9,200	4.936	-	1,840	75.0°	57.1°	0.0°	57.1°	72°				177,854		100%	-
0-4/1	2.5	0.0		2	9,200	4.936	10	1,840	75.0°	58.1°	0.0°	58.1°	72°				167,918		56%	2.34
5-9/6	7.5	2.9		5	9,200	4.936	25	1,840	74.0°	59.1°	0.0°	59.1°	72°				148,046		53%	4.86
10-14/11	12.5	4.2		77	9,200	4.936	380	1,840	73.0°	60.1°	0.0°	60.1°	72°				128,174		49%	60.74
15-19/15	17.5	5.7		270	9,200	4.936	1,333	1,840	72.0°	61.1°	0.0°	61.1°	72°				108,302		46%	167.89
20-24/20	22.5	7.3		452	9,200	4.936	2,231	1,840	72.0°	62.1°	0.0°	62.1°	72°				98,366		43%	236.91
25-29/25	27.5	9.0		411	9,200	4.936	2,029	1,840	72.0°	63.1°	0.0°	63.1°	72°				88,430		39%	178.65
30-34/30	32.5	11.1		897	9,200	4.936	4,427	1,840	72.0°	64.1°	0.0°	64.1°	72°				78,494		36%	317.00
35-39/34	37.5	12.8		808	9,200	4.936	3,988	1,840	72.0°	65.1°	0.0°	65.1°	72°				68,558		33%	226.52
40-44/38	42.5	15.1		722	9,200	4.936	3,564	1,840	72.0°	66.1°	0.0°	66.1°	72°				58,622		29%	155.59
45-49/42	47.5	17.0		512	9,200	4.936	2,527	1,840	72.0°	67.1°	0.0°	67.1°	72°				48,686		40%	124.35
50-54/47	52.5	19.7	25.6	659	9,200	4.936	3,253	1,840	55.0°	68.1°	0.0°	68.1°	72°	130,162	3,877	10.85	-		45%	
55-59/52	57.5	22.9	25.9	829	9,200	4.936	4,092	1,840	55.0°	69.1°	0.0°	69.1°	72°	140,098	5,650	11.67	-		49%	
60-64/56	62.5	25.7	26.1	1010	9,200	4.936	4,985	1,840	55.0°	70.1°	0.0°	70.1°	72°	150,034	7,894	12.50	-		52%	
65-69/60	67.5	28.7	26.3	812	9,200	4.936	4,008	1,840	55.0°	71.1°	0.0°	71.1°	72°	159,970	7,215	13.33			56%	
70-74/63	72.5	31.0	26.6	470	9,200	4.936	2,320	1,840	55.0°	72.1°	0.0°	72.1°	72°	169,906	4,711	14.16			59%	
75-79/66	77.5	32.4	26.8	436	9,200	4.936	2,152	1,840	55.0°	73.1°	0.0°	73.1°	72°	179,842	4,896	14.99			62%	
80-84/69	82.5	33.8	27.1	265	9,200	4.936	1,308	1,840	55.0°	74.1°	0.0°	74.1°	72°	189,778	3,314	15.81			66%	
85-89/72	87.5	36.5	27.3	106	9,200	4.936	523	1,840	55.0°	75.1°	0.0°	75.1°	72°	199,714	1,468	16.64			69%	
90-94/73	92.5	39.2	27.6	17	9,200	4.936	84	1,840	55.0°	76.1°	0.0°	76.1°	72°	209,650	259	17.47			73%	
				8,760.00			43,237								39,284	17.47				1,475

Title	**Control Upgrades**
ECM#	**7**
Project:	**SCI Houtzdale**
Site:	**SCI Houtzdale**
Unit #:	**HV-1**

CONVERSION FACTORS				Design Conditions		
SLR	**#DIV/0!**	Sensible	/latent	Supply CFM	15,370	
FANHP (F.L.)	**8.08**	HP@	15,370	Total Cooling		750,000
RAFHP (F.L.)	-	HP@	4,770	Sensible Cooling		
FMEFF	**90%**	Percent		Air Side TD		
CFMREF	**15,370**	CFM		Supply HP	10	
DREFF	**97%**	Percent	(@F.L.)	T.S.P.	2.0	
MINVOL	**6,148**	CFM	CFM	Supply Fan Eff	60%	
Conv. Fact.	6,344	60	0.24	Return CFM	4,770	
Off Coil Conditions	55	26.34	28	Return T.S.P.	-	
Btu/CCF	102,800	Heat EX Eff Wtr:		Return Fan HP		
kW/Ton	1.20	Heat EX Eff Smr:		Return Fan Eff	60%	

Existing Operation

Bin DB temp/ WetBulb	Average Temp	enthapy OA btu/lb	enthapy Mixed Air btu/lb	Bin hrs	SA air flow CFM	Fan kW	Fan kWh	OA air flow CFM	Discharge Air Temp	MAT Air Temp	Heat Pipe Air Temp DT °F	MAT Air Temp w/ Hpipe	Space Temp setpoint	Total Cooling BTU/Hr	Total Cooling kWh/year	Total Cooling Demand Tons	Total Heating BTU/Hr	Total Reheat BTU/Hr	Run Fraction	Existing Heating CCF/year
-15 -11 / -12.6	-12.5	0.0		0	15,370	6.731	-	10,600	75.0°	13.7°	0.0°	13.7°	72°				750,000		100%	-
-10 -6 / -7.1	-7.5	0.0		0	15,370	6.731	-	10,600	75.0°	17.2°	0.0°	17.2°	72°				750,000		100%	-
-5 -1 / -2.9	-2.5	0.0		0	15,370	6.731	-	10,600	75.0°	20.6°	0.0°	20.6°	72°				750,000		100%	-
0-4/1	2.5	0.0		2	15,370	6.731	13	10,600	75.0°	24.1°	0.0°	24.1°	72°				750,000		100%	18.71
5-9/6	7.5	2.9		5	15,370	6.731	34	10,600	75.0°	27.5°	0.0°	27.5°	72°				750,000		100%	46.77
10-14/11	12.5	4.2		77	15,370	6.731	518	10,600	75.0°	31.0°	0.0°	31.0°	72°				730,955		97%	684.11
15-19/15	17.5	5.7		270	15,370	6.731	1,817	10,600	75.0°	34.4°	0.0°	34.4°	72°				673,715		90%	2,037.83
20-24/20	22.5	7.3		452	15,370	6.731	3,043	10,600	75.0°	37.9°	0.0°	37.9°	72°				616,475		82%	2,856.41
25-29/25	27.5	9.0		411	15,370	6.731	2,767	10,600	75.0°	41.3°	0.0°	41.3°	72°				559,235		75%	2,137.38
30-34/30	32.5	11.1		897	15,370	6.731	6,038	10,600	75.0°	44.8°	0.0°	44.8°	72°				501,995		67%	3,758.74
35-39/34	37.5	12.8		808	15,370	6.731	5,439	10,600	75.0°	48.2°	0.0°	48.2°	72°				444,755		59%	2,657.69
40-44/38	42.5	15.1		722	15,370	6.731	4,860	10,600	75.0°	51.7°	0.0°	51.7°	72°				387,515		52%	1,802.87
45-49/42	47.5	17.0		512	15,370	6.731	3,446	10,600	75.0°	55.1°	0.0°	55.1°	72°				330,275		40%	843.56
50-54/47	52.5	19.7	23.3	659	15,370	6.731	4,436	10,600	55.0°	58.6°	0.0°	58.6°	72°			-	-			
55-59/52	57.5	22.9	24.1	829	15,370	6.731	5,580	10,600	55.0°	62.0°	0.0°	62.0°	72°			-	-			
60-64/56	62.5	25.7	25.0	1010	15,370	6.731	6,799	10,600	55.0°	65.4°	0.0°	65.4°	72°			-	-			
65-69/60	67.5	28.7	25.8	812	15,370	6.731	5,466	10,600	55.0°	68.9°	0.0°	68.9°	72°			-				
70-74/63	72.5	31.0	26.6	470	15,370	6.731	3,164	10,600	55.0°	72.3°	0.0°	72.3°	72°			-				
75-79/66	77.5	32.4	27.5	436	15,370	6.731	2,935	10,600	55.0°	75.8°	0.0°	75.8°	72°			-				
80-84/69	82.5	33.8	28.3	265	15,370	6.731	1,784	10,600	55.0°	79.2°	0.0°	79.2°	72°			-				
85-89/72	87.5	36.5	29.2	106	15,370	6.731	714	10,600	55.0°	82.7°	0.0°	82.7°	72°			-				
90-94/73	92.5	39.2	30.0	17	15,370	6.731	114	10,600	55.0°	86.1°	0.0°	86.1°	72°			-				
				8,760.00			58,967								-	-				16,844

CONVERSION FACTORS				Design Conditions		
	#DIV/0!	Sensible	/latent	Supply CFM	15,370	
FANHP (F.L.)	**8.08**	HP@	15,370	Total Cooling	-	750,000
RAFHP (F.L.)	-	HP@	4,770	Sensible Cooling	-	
FMEFF	**90%**	Percent		Air Side TD	-	
CFMREF	**15,370**	CFM		Supply HP	10	
DREFF	**97%**	Percent	(@F.L.)	T.S.P.	2.0	
MINVOL	**6,148**	CFM	CFM	Supply Fan Eff	60%	
Conv. Fact.	6,344	60	0.24	Return CFM	4,770	
Off Coil Conditions	55	26.34	28	Return T.S.P.	-	
Ht Pmp COP	102,800	Heat EX Eff Wtr:		Return Fan HP		
kW/Ton	1.20	Heat EX Eff Smr:		Return Fan Eff	60%	

Bin DB temp/ WetBulb	Average Temp	enthapy OA btu/lb	enthapy Mixed Air btu/lb	Bin hrs	SA air flow CFM	Fan kW	Fan kWh	OA air flow CFM	Discharge Air Temp	MAT Air Temp	Heat Pipe Air Temp DT °F	MAT Air Temp w/ Hpipe	Space Temp setpoint	Total Cooling BTU/Hr	Total Cooling kWh/year	Total Cooling Demand Tons	Total Heating BTU/Hr	Total Reheat BTU/Hr	Run Fraction	Proposed Heating CCF/year
-15 -11 / -12.6	-12.5	0.0		0	15,370	6.731	-	10,600	75.0°	13.7°	0.0°	13.7°	72°				750,000		100%	-
-10 -6 / -7.1	-7.5	0.0		0	15,370	6.731	-	10,600	75.0°	17.2°	0.0°	17.2°	72°				750,000		100%	-
-5 -1 / -2.9	-2.5	0.0		0	15,370	6.731	-	10,600	75.0°	20.6°	0.0°	20.6°	72°				750,000		100%	-
0-4/1	2.5	0.0		2	15,370	6.731	13	10,600	75.0°	24.1°	0.0°	24.1°	72°				750,000		100%	18.71
5-9/6	7.5	2.9		4	15,370	6.731	27	10,600	74.0°	27.5°	0.0°	27.5°	72°				750,000		100%	37.41
10-14/11	12.5	4.2		53	15,370	6.731	357	10,600	73.0°	31.0°	0.0°	31.0°	72°				697,756		97%	449.49
15-19/15	17.5	5.7		210	15,370	6.731	1,414	10,600	72.0°	34.4°	0.0°	34.4°	72°				623,916		90%	1,467.82
20-24/20	22.5	7.3		370	15,370	6.731	2,491	10,600	72.0°	37.9°	0.0°	37.9°	72°				566,676		82%	2,149.33
25-29/25	27.5	9.0		337	15,370	6.731	2,268	10,600	72.0°	41.3°	0.0°	41.3°	72°				509,436		75%	1,596.48
30-34/30	32.5	11.1		719	15,370	6.731	4,840	10,600	72.0°	44.8°	0.0°	44.8°	72°				452,196		67%	2,713.98
35-39/34	37.5	12.8		662	15,370	6.731	4,456	10,600	72.0°	48.2°	0.0°	48.2°	72°				394,956		59%	1,933.65
40-44/38	42.5	15.1		577	15,370	6.731	3,884	10,600	72.0°	51.7°	0.0°	51.7°	72°				337,716		52%	1,255.64
45-49/42	47.5	17.0		426	15,370	6.731	2,868	10,600	72.0°	55.1°	0.0°	55.1°	72°				280,476		40%	596.04
50-54/47	52.5	19.7	23.3	531	15,370	6.731	3,574	10,600	55.0°	58.6°	0.0°	58.6°	72°			-	-			
55-59/52	57.5	22.9	24.1	642	15,370	6.731	4,322	10,600	55.0°	62.0°	0.0°	62.0°	72°			-	-			
60-64/56	62.5	25.7	25.0	827	15,370	6.731	5,567	10,600	55.0°	65.4°	0.0°	65.4°	72°			-	-			
65-69/60	67.5	28.7	25.8	682	15,370	6.731	4,591	10,600	55.0°	68.9°	0.0°	68.9°	72°			-				
70-74/63	72.5	31.0	26.6	448	15,370	6.731	3,016	10,600	55.0°	72.3°	0.0°	72.3°	72°			-				
75-79/66	77.5	32.4	27.5	422	15,370	6.731	2,841	10,600	55.0°	75.8°	0.0°	75.8°	72°			-				
80-84/69	82.5	33.8	28.3	265	15,370	6.731	1,784	10,600	55.0°	79.2°	0.0°	79.2°	72°			-				
85-89/72	87.5	36.5	29.2	106	15,370	6.731	714	10,600	55.0°	82.7°	0.0°	82.7°	72°			-				
90-94/73	92.5	39.2	30.0	17	15,370	6.731	114	10,600	55.0°	86.1°	0.0°	86.1°	72°			-				
				7,300.00			49,139								-	-				12,219

H&V-1 Laundry

Title	**Control Upgrades**
ECM#	**7**
Project:	**SCI Houtzdale**
Site:	**SCI Houtzdale**
Unit #:	**HV-3**

CONVERSION FACTORS				Design Conditions		
SLR	**#DIV/0!**	Sensible	/latent	Supply CFM	22,000	
FANHP (F.L.)	**14.45**	HP@	22,000	Total Cooling		760,000
RAFHP (F.L.)	**-**	HP@	14,700	Sensible Cooling		
FMEFF	**91%**	Percent		Air Side TD		
CFMREF	**22,000**	CFM		Supply HP	20	
DREFF	**97%**	Percent	(@F.L.)	T.S.P.	2.5	
MINVOL	**8,800**	CFM	CFM	Supply Fan Eff	60%	
Conv. Fact.	6,344	60	0.24	Return CFM	14,700	
Off Coil Conditions			28	Return T.S.P.	-	
Btu/CCF	102,800	Heat EX Eff Wtr:		Return Fan HP		
kW/Ton	1.20	Heat EX Eff Smr:		Return Fan Eff	60%	

Existing Operation

Bin DB temp/ WetBulb	Average Temp	enthapy OA btu/lb	enthapy Mixed Air btu/lb	Bin hrs	SA air flow CFM	Fan kW	Fan kWh	OA air flow CFM	Discharge Air Temp	MAT Air Temp	Heat Pipe Air Temp DT °F	MAT Air Temp w/ Hpipe	Space Temp setpoint	Total Cooling BTU/Hr	Total Cooling kWh/year	Total Cooling Demand Tons	Total Heating BTU/Hr	Total Reheat BTU/Hr	Run Fraction	Existing Heating CCF/year
-15 -11 / -12.6	-12.5	0.0		0	22,000	11.845	-	7,300	75.0°	44.0°	0.0°	44.0°	72°				737,478		100%	-
-10 -6 / -7.1	-7.5	0.0		0	22,000	11.845	-	7,300	75.0°	45.6°	0.0°	45.6°	72°				698,058		100%	-
-5 -1 / -2.9	-2.5	0.0		0	22,000	11.845	-	7,300	75.0°	47.3°	0.0°	47.3°	72°				658,638		100%	-
0-4/1	2.5	0.0		2	22,000	11.845	24	7,300	75.0°	48.9°	0.0°	48.9°	72°				619,218		81%	12.58
5-9/6	7.5	2.9		5	22,000	11.845	59	7,300	75.0°	50.6°	0.0°	50.6°	72°				579,798		76%	27.58
10-14/11	12.5	4.2		77	22,000	11.845	912	7,300	75.0°	52.3°	0.0°	52.3°	72°				540,378		71%	368.96
15-19/15	17.5	5.7		270	22,000	11.845	3,198	7,300	75.0°	53.9°	0.0°	53.9°	72°				500,958		66%	1,111.90
20-24/20	22.5	7.3		452	22,000	11.845	5,354	7,300	75.0°	55.6°	0.0°	55.6°	72°				461,538		61%	1,579.98
25-29/25	27.5	9.0		411	22,000	11.845	4,868	7,300	75.0°	57.2°	0.0°	57.2°	72°				422,118		56%	1,201.73
30-34/30	32.5	11.1		897	22,000	11.845	10,625	7,300	75.0°	58.9°	0.0°	58.9°	72°				382,698		50%	2,155.78
35-39/34	37.5	12.8		808	22,000	11.845	9,571	7,300	75.0°	60.6°	0.0°	60.6°	72°				343,278		45%	1,562.44
40-44/38	42.5	15.1		722	22,000	11.845	8,552	7,300	75.0°	62.2°	0.0°	62.2°	72°				303,858		40%	1,093.90
45-49/42	47.5	17.0		512	22,000	11.845	6,065	7,300	75.0°	63.9°	0.0°	63.9°	72°				264,438		40%	675.41
50-54/47	52.5	19.7	25.0	659	22,000	11.845	7,806	7,300	0.0°	65.5°	0.0°	65.5°	72°			-	-			
55-59/52	57.5	22.9	25.4	829	22,000	11.845	9,820	7,300	0.0°	67.2°	0.0°	67.2°	72°			-	-			
60-64/56	62.5	25.7	25.8	1010	22,000	11.845	11,964	7,300	0.0°	68.8°	0.0°	68.8°	72°			-	-			
65-69/60	67.5	28.7	26.2	812	22,000	11.845	9,618	7,300	0.0°	70.5°	0.0°	70.5°	72°			-				
70-74/63	72.5	31.0	26.6	470	22,000	11.845	5,567	7,300	0.0°	72.2°	0.0°	72.2°	72°			-				
75-79/66	77.5	32.4	27.0	436	22,000	11.845	5,165	7,300	0.0°	73.8°	0.0°	73.8°	72°			-				
80-84/69	82.5	33.8	27.4	265	22,000	11.845	3,139	7,300	0.0°	75.5°	0.0°	75.5°	72°			-				
85-89/72	87.5	36.5	27.8	106	22,000	11.845	1,256	7,300	0.0°	77.1°	0.0°	77.1°	72°			-				
90-94/73	92.5	39.2	28.2	17	22,000	11.845	201	7,300	0.0°	78.8°	0.0°	78.8°	72°			-				
				8,760.00			103,765								-	-				9,790

CONVERSION FACTORS				Design Conditions		
	#DIV/0!	Sensible	/latent	Supply CFM	22,000	
FANHP (F.L.)	**14.45**	HP@	22,000	Total Cooling	-	760,000
RAFHP (F.L.)	-	HP@	14,700	Sensible Cooling	-	
FMEFF	**91%**	Percent		Air Side TD	-	
CFMREF	**22,000**	CFM		Supply HP	20	
DREFF	**97%**	Percent	(@F.L.)	T.S.P.	2.5	
MINVOL	**8,800**	CFM	CFM	Supply Fan Eff	60%	
Conv. Fact.	6,344	60	0.24	Return CFM	14,700	
Off Coil Conditions		-	28	Return T.S.P.	-	
Ht Pmp COP	102,800	Heat EX Eff Wtr:		Return Fan HP		
kW/Ton	1.20	Heat EX Eff Smr:		Return Fan Eff	60%	

Bin DB temp/ WetBulb	Average Temp	enthapy OA btu/lb	enthapy Mixed Air btu/lb	Bin hrs	SA air flow CFM	Fan kW	Fan kWh	OA air flow CFM	Discharge Air Temp	MAT Air Temp	Heat Pipe Air Temp DT °F	MAT Air Temp w/ Hpipe	Space Temp setpoint	Total Cooling BTU/Hr	Total Cooling kWh/year	Total Cooling Demand Tons	Total Heating BTU/Hr	Total Reheat BTU/Hr	Run Fraction	Proposed Heating CCF/year
-15 -11 / -12.6	-12.5	0.0		0	22,000	11.845	-	7,300	75.0°	44.0°	0.0°	44.0°	72°				737,478		100%	-
-10 -6 / -7.1	-7.5	0.0		0	22,000	11.845	-	7,300	75.0°	45.6°	0.0°	45.6°	72°				698,058		100%	-
-5 -1 / -2.9	-2.5	0.0		0	22,000	11.845	-	7,300	75.0°	47.3°	0.0°	47.3°	72°				658,638		100%	-
0-4/1	2.5	0.0		2	22,000	11.845	24	7,300	75.0°	48.9°	0.0°	48.9°	72°				619,218		81%	12.58
5-9/6	7.5	2.9		3	22,000	11.845	36	7,300	74.0°	50.6°	0.0°	50.6°	72°				556,038		76%	15.87
10-14/11	12.5	4.2		42	22,000	11.845	498	7,300	73.0°	52.3°	0.0°	52.3°	72°				492,858		71%	183.56
15-19/15	17.5	5.7		179	22,000	11.845	2,120	7,300	72.0°	53.9°	0.0°	53.9°	72°				429,678		66%	632.26
20-24/20	22.5	7.3		325	22,000	11.845	3,850	7,300	72.0°	55.6°	0.0°	55.6°	72°				390,258		61%	960.60
25-29/25	27.5	9.0		303	22,000	11.845	3,589	7,300	72.0°	57.2°	0.0°	57.2°	72°				350,838		56%	736.35
30-34/30	32.5	11.1		628	22,000	11.845	7,439	7,300	72.0°	58.9°	0.0°	58.9°	72°				311,418		50%	1,228.17
35-39/34	37.5	12.8		590	22,000	11.845	6,989	7,300	72.0°	60.6°	0.0°	60.6°	72°				271,998		45%	903.99
40-44/38	42.5	15.1		505	22,000	11.845	5,982	7,300	72.0°	62.2°	0.0°	62.2°	72°				232,578		40%	585.64
45-49/42	47.5	17.0		386	22,000	11.845	4,572	7,300	72.0°	63.9°	0.0°	63.9°	72°				193,158		40%	371.94
50-54/47	52.5	19.7	25.0	469	22,000	11.845	5,555	7,300	0.0°	65.5°	0.0°	65.5°	72°			-	-			
55-59/52	57.5	22.9	25.4	562	22,000	11.845	6,657	7,300	0.0°	67.2°	0.0°	67.2°	72°			-	-			
60-64/56	62.5	25.7	25.8	719	22,000	11.845	8,517	7,300	0.0°	68.8°	0.0°	68.8°	72°			-	-			
65-69/60	67.5	28.7	26.2	622	22,000	11.845	7,368	7,300	0.0°	70.5°	0.0°	70.5°	72°			-				
70-74/63	72.5	31.0	26.6	431	22,000	11.845	5,105	7,300	0.0°	72.2°	0.0°	72.2°	72°			-				
75-79/66	77.5	32.4	27.0	416	22,000	11.845	4,928	7,300	0.0°	73.8°	0.0°	73.8°	72°			-				
80-84/69	82.5	33.8	27.4	265	22,000	11.845	3,139	7,300	0.0°	75.5°	0.0°	75.5°	72°			-				
85-89/72	87.5	36.5	27.8	106	22,000	11.845	1,256	7,300	0.0°	77.1°	0.0°	77.1°	72°			-				
90-94/73	92.5	39.2	28.2	17	22,000	11.845	201	7,300	0.0°	78.8°	0.0°	78.8°	72°			-				
				6,570.00			77,824								-	-				5,631

Title	**Control Upgrades**
ECM#	**7**
Project:	**SCI Houtzdale**
Site:	**SCI Houtzdale**
Unit #:	**HV-4**

CONVERSION FACTORS				Design Conditions		
SLR	**#DIV/0!**	Sensible	/latent	Supply CFM	20,000	
FANHP (F.L.)	**13.14**	HP@	20,000	Total Cooling		614,000
RAFHP (F.L.)	**-**	HP@	13,555	Sensible Cooling		
FMEFF	**91%**	Percent		Air Side TD		
CFMREF	**20,000**	CFM		Supply HP	20	
DREFF	**97%**	Percent	(@F.L.)	T.S.P.	2.5	
MINVOL	**8,000**	CFM	CFM	Supply Fan Eff	60%	
Conv. Fact.	6,344	60	0.24	Return CFM	13,555	
Off Coil Conditions			28	Return T.S.P.	-	
Btu/CCF	102,800	Heat EX Eff Wtr:		Return Fan HP		
kW/Ton	1.20	Heat EX Eff Smr:		Return Fan Eff	60%	

Existing Operation

Bin DB temp/ WetBulb	Average Temp	enthapy OA btu/lb	enthapy Mixed Air btu/lb	Bin hrs	SA air flow CFM	Fan kW	Fan kWh	OA air flow CFM	Discharge Air Temp	MAT Air Temp	Heat Pipe Air Temp DT °F	MAT Air Temp w/ Hpipe	Space Temp setpoint	Total Cooling BTU/Hr	Total Cooling kWh/year	Total Cooling Demand Tons	Total Heating BTU/Hr	Total Reheat BTU/Hr	Run Fraction	Existing Heating CCF/year
-15 -11 / -12.6	-12.5	0.0		0	20,000	10.768	-	6,445	75.0°	44.8°	0.0°	44.8°	72°				614,000		100%	-
-10 -6 / -7.1	-7.5	0.0		0	20,000	10.768	-	6,445	75.0°	46.4°	0.0°	46.4°	72°				614,000		100%	-
-5 -1 / -2.9	-2.5	0.0		0	20,000	10.768	-	6,445	75.0°	48.0°	0.0°	48.0°	72°				583,365		100%	-
0-4/1	2.5	0.0		2	20,000	10.768	22	6,445	75.0°	49.6°	0.0°	49.6°	72°				548,562		89%	12.22
5-9/6	7.5	2.9		5	20,000	10.768	54	6,445	75.0°	51.2°	0.0°	51.2°	72°				513,759		84%	26.81
10-14/11	12.5	4.2		77	20,000	10.768	829	6,445	75.0°	52.8°	0.0°	52.8°	72°				478,956		78%	358.78
15-19/15	17.5	5.7		270	20,000	10.768	2,907	6,445	75.0°	54.4°	0.0°	54.4°	72°				444,153		72%	1,081.86
20-24/20	22.5	7.3		452	20,000	10.768	4,867	6,445	75.0°	56.0°	0.0°	56.0°	72°				409,350		67%	1,538.41
25-29/25	27.5	9.0		411	20,000	10.768	4,426	6,445	75.0°	57.7°	0.0°	57.7°	72°				374,547		61%	1,171.11
30-34/30	32.5	11.1		897	20,000	10.768	9,659	6,445	75.0°	59.3°	0.0°	59.3°	72°				339,744		55%	2,103.00
35-39/34	37.5	12.8		808	20,000	10.768	8,701	6,445	75.0°	60.9°	0.0°	60.9°	72°				304,941		50%	1,526.11
40-44/38	42.5	15.1		722	20,000	10.768	7,775	6,445	75.0°	62.5°	0.0°	62.5°	72°				270,138		44%	1,070.17
45-49/42	47.5	17.0		512	20,000	10.768	5,513	6,445	75.0°	64.1°	0.0°	64.1°	72°				235,335		40%	601.07
50-54/47	52.5	19.7	25.0	659	20,000	10.768	7,096	6,445	0.0°	65.7°	0.0°	65.7°	72°			-	-			
55-59/52	57.5	22.9	25.4	829	20,000	10.768	8,927	6,445	0.0°	67.3°	0.0°	67.3°	72°			-	-			
60-64/56	62.5	25.7	25.8	1010	20,000	10.768	10,876	6,445	0.0°	68.9°	0.0°	68.9°	72°			-	-			
65-69/60	67.5	28.7	26.2	812	20,000	10.768	8,744	6,445	0.0°	70.5°	0.0°	70.5°	72°			-				
70-74/63	72.5	31.0	26.6	470	20,000	10.768	5,061	6,445	0.0°	72.2°	0.0°	72.2°	72°			-				
75-79/66	77.5	32.4	27.0	436	20,000	10.768	4,695	6,445	0.0°	73.8°	0.0°	73.8°	72°			-				
80-84/69	82.5	33.8	27.4	265	20,000	10.768	2,854	6,445	0.0°	75.4°	0.0°	75.4°	72°			-				
85-89/72	87.5	36.5	27.8	106	20,000	10.768	1,141	6,445	0.0°	77.0°	0.0°	77.0°	72°			-				
90-94/73	92.5	39.2	28.2	17	20,000	10.768	183	6,445	0.0°	78.6°	0.0°	78.6°	72°			-				
				8,760.00			94,332								-	-				9,490

CONVERSION FACTORS				Design Conditions		
	#DIV/0!	Sensible	/latent	Supply CFM	20,000	
FANHP (F.L.)	**13.14**	HP@	20,000	Total Cooling	-	614,000
RAFHP (F.L.)	**-**	HP@	13,555	Sensible Cooling	-	
FMEFF	**91%**	Percent		Air Side TD	-	
CFMREF	**20,000**	CFM		Supply HP	20	
DREFF	**97%**	Percent	(@F.L.)	T.S.P.	2.5	
MINVOL	**8,000**	CFM	CFM	Supply Fan Eff	60%	
Conv. Fact.	6,344	60	0.24	Return CFM	13,555	
Off Coil Conditions			28	Return T.S.P.	-	
Ht Pmp COP	102,800	Heat EX Eff Wtr:		Return Fan HP		
kW/Ton	1.20	Heat EX Eff Smr:		Return Fan Eff	60%	

Bin DB temp/ WetBulb	Average Temp	enthapy OA btu/lb	enthapy Mixed Air btu/lb	Bin hrs	SA air flow CFM	Fan kW	Fan kWh	OA air flow CFM	Discharge Air Temp	MAT Air Temp	Heat Pipe Air Temp DT °F	MAT Air Temp w/ Hpipe	Space Temp setpoint	Total Cooling BTU/Hr	Total Cooling kWh/year	Total Cooling Demand Tons	Total Heating BTU/Hr	Total Reheat BTU/Hr	Run Fraction	Proposed Heating CCF/year
-15 -11 / -12.6	-12.5	0.0		0	20,000	10.768	-	6,445	75.0°	44.8°	0.0°	44.8°	72°				614,000		100%	-
-10 -6 / -7.1	-7.5	0.0		0	20,000	10.768	-	6,445	75.0°	46.4°	0.0°	46.4°	72°				614,000		100%	-
-5 -1 / -2.9	-2.5	0.0		0	20,000	10.768	-	6,445	75.0°	48.0°	0.0°	48.0°	72°				583,365		100%	-
0-4/1	2.5	0.0		2	20,000	10.768	22	6,445	75.0°	49.6°	0.0°	49.6°	72°				548,562		89%	12.22
5-9/6	7.5	2.9		3	20,000	10.768	32	6,445	74.0°	51.2°	0.0°	51.2°	72°				492,159		84%	15.41
10-14/11	12.5	4.2		42	20,000	10.768	452	6,445	73.0°	52.8°	0.0°	52.8°	72°				435,756		78%	178.05
15-19/15	17.5	5.7		179	20,000	10.768	1,928	6,445	72.0°	54.4°	0.0°	54.4°	72°				379,353		72%	612.59
20-24/20	22.5	7.3		325	20,000	10.768	3,500	6,445	72.0°	56.0°	0.0°	56.0°	72°				344,550		67%	931.05
25-29/25	27.5	9.0		303	20,000	10.768	3,263	6,445	72.0°	57.7°	0.0°	57.7°	72°				309,747		61%	714.00
30-34/30	32.5	11.1		628	20,000	10.768	6,763	6,445	72.0°	59.3°	0.0°	59.3°	72°				274,944		55%	1,191.51
35-39/34	37.5	12.8		590	20,000	10.768	6,353	6,445	72.0°	60.9°	0.0°	60.9°	72°				240,141		50%	877.56
40-44/38	42.5	15.1		505	20,000	10.768	5,438	6,445	72.0°	62.5°	0.0°	62.5°	72°				205,338		44%	568.97
45-49/42	47.5	17.0		386	20,000	10.768	4,157	6,445	72.0°	64.1°	0.0°	64.1°	72°				170,535		40%	328.38
50-54/47	52.5	19.7	25.0	469	20,000	10.768	5,050	6,445	0.0°	65.7°	0.0°	65.7°	72°			-	-			
55-59/52	57.5	22.9	25.4	562	20,000	10.768	6,052	6,445	0.0°	67.3°	0.0°	67.3°	72°			-	-			
60-64/56	62.5	25.7	25.8	719	20,000	10.768	7,743	6,445	0.0°	68.9°	0.0°	68.9°	72°			-	-			
65-69/60	67.5	28.7	26.2	622	20,000	10.768	6,698	6,445	0.0°	70.5°	0.0°	70.5°	72°			-				
70-74/63	72.5	31.0	26.6	431	20,000	10.768	4,641	6,445	0.0°	72.2°	0.0°	72.2°	72°			-				
75-79/66	77.5	32.4	27.0	416	20,000	10.768	4,480	6,445	0.0°	73.8°	0.0°	73.8°	72°			-				
80-84/69	82.5	33.8	27.4	265	20,000	10.768	2,854	6,445	0.0°	75.4°	0.0°	75.4°	72°			-				
85-89/72	87.5	36.5	27.8	106	20,000	10.768	1,141	6,445	0.0°	77.0°	0.0°	77.0°	72°			-				
90-94/73	92.5	39.2	28.2	17	20,000	10.768	183	6,445	0.0°	78.6°	0.0°	78.6°	72°			-				
				6,570.00			70,749								-	-				5,430

DATA LOGGER GRAPH SHOWING AHU-38 RUN TIME

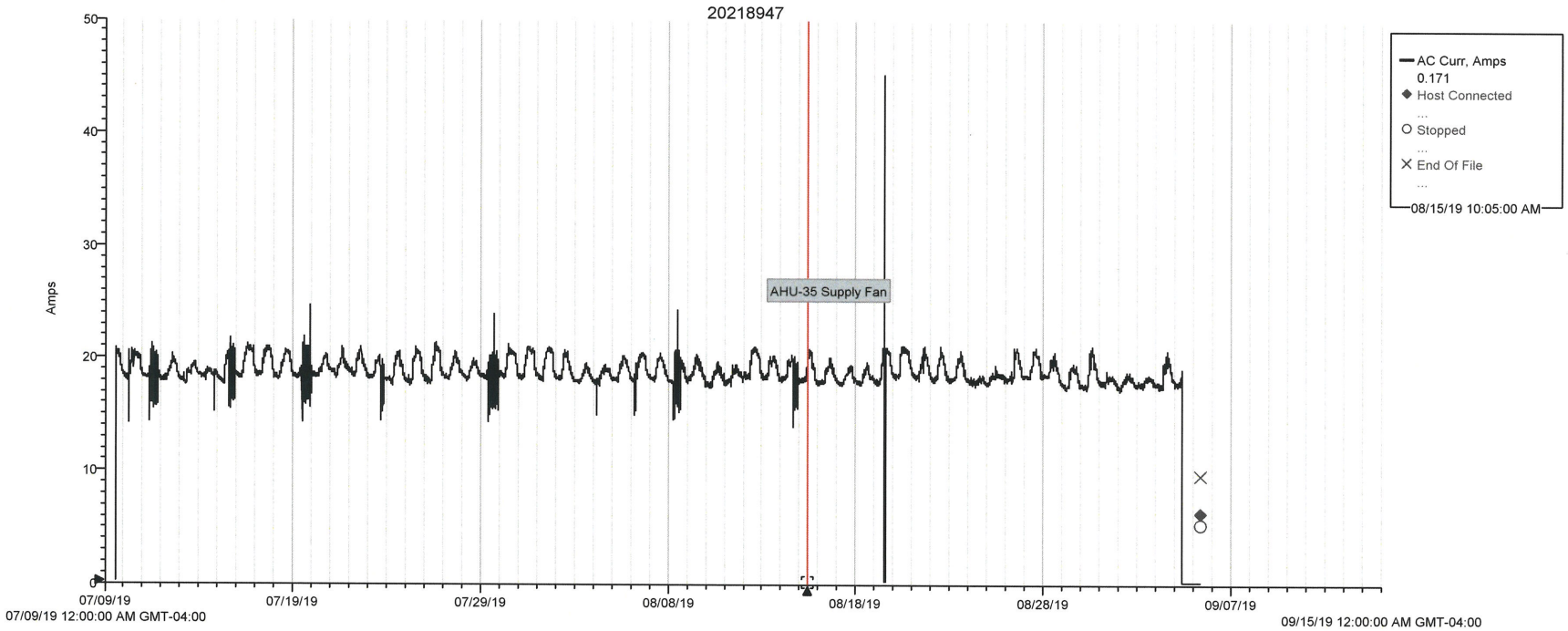

SAVINGS CALCULATION

ECM-8 Roof Replacement

ECM-10 Kitchen Modifications

ECM-12 Domestic Water Booster Pump Replacement

Existing Roof Heating Load

Client:	**SCI Houtzdale**
Location:	**Roofs**

Design Inputs

Occupied Design Temp:	**70**	Degrees F
Outside Design Temp:	**5**	Degrees F
Building Information		
Conditionedl SqFt	**422,294**	
Lighting Load:	**0**	kW
Equipment:	**0**	kW
No. of People:	**0**	= 0 cfm ODA required @ 15 cfm/person
Heat gain per person:	**225**	Btuh per person

Building Section	Component	Area (sq feet)	U - value	(O.A Temp - Indoor Temp)	Heat Loss (Btu/hour)	% of Total
Exterior Walls	Total North	**0**	**0.197**	65	0	0%
	Total East	**0**	**0.197**	65	0	0%
	Total South	**0**	**0.197**	65	0	0%
	Total West	**0**	**0.197**	65	0	0%
Windows	Total Glazing DP	**0**	**0.55**	65	0	0%
Windows	Insulated Panel	**0**	**0.09**	65	0	0%
Windows	Total GlazingSP	**0**	**1.13**	65	0	0%
Exterior Doors	Glass/Aluminum	**0**	**0.59**	65	0	0%
Roofs, Ceilings	with suspended ceiling	**422,294**	**0.07**	65	2,031,762	100%
	without suspended ceil.	**0**	**0.00**	65	0	0%
Glass Block	Glass Block Glazing	**0**	**0.61**	65	0	0%
						0%
		lineal feet	Btuh / ft			
Perimeter Loss		**460**	**0**		0	0%
Slab loss		**140,765**	**0**		0	0%
	Building Volume (cu ft)	Air Changes per Hour	Conversion Factor			
Infiltration	**15,836,025**	**0.00**	0.018 cfm	65	185	0%
				Building Envelope Loads:	2,031,948	100%
	% of Occupied Rate					
Occupied Ventilation:	0%	**0**	cfm	65	0	0%
Unoccupied Ventilation:	**0%**	0	cfm	65	0	
				Total Heat Loss - Occupied Periods:	**2,031,948**	100%
				Total Heat Loss - Unoccupied Periods:	2,031,948	100%

Temp. °F	Total Hours	MMBtuOutput From Boiler 31,261 Btuh / Deg F	Existing Annual MCF Input to Boiler
52.5	659	360	424
47.5	512	360	424
42.5	722	621	730
37.5	808	821	966
32.5	897	1,051	1,237
27.5	411	546	642
22.5	452	671	790
17.5	270	443	521
12.5	77	138	163
7.5	5	10	11
2.5	2	4	5
-2.5	0	-	-
-7.5	0	-	-
	4,815	5,026	5,913

CALCULATIONS:

Heat Loss:

By Conduction = Area x U-value x (Outdoor Temp. - Indoor Temp)

By Perimeter = Length of Perimeter x Btuh/ft

By Infiltration = Building Volume x No. of Air Changes per Hour x Conv factor x (Indoor Temp - Outdoor Temp)

Proposed Roof Heating Load

Client:	**SCI Houtzdale**
Location:	**Roofs**

Design Inputs

Occupied Design Temp:	**70**	Degrees F
Outside Design Temp:	**5**	Degrees F
Building Information		
Conditionedl SqFt	**422,294**	
Lighting Load:	**0**	kW
Equipment:	**0**	kW
No. of People:	**0**	= 0 cfm ODA required @ 15 cfm/person
Heat gain per person:	**225**	Btuh per person

Building Section	Component	Area (sq feet)	U - value	(O.A Temp - Indoor Temp)	Heat Loss (Btu/hour)	% of Total
Exterior Walls	Total North	**0**	**0.197**	65	0	0%
	Total East	**0**	**0.197**	65	0	0%
	Total South	**0**	**0.197**	65	0	0%
	Total West	**0**	**0.197**	65	0	0%
Windows	Total Glazing DP	**0**	**0.55**	65	0	0%
Windows	Insulated Panel	**0**	**0.09**	65	0	0%
Windows	Total GlazingSP	**0**	**1.13**	65	0	0%
Exterior Doors	Glass/Aluminum	**0**	**0.59**	65	0	0%
Roofs, Ceilings	with suspended ceiling	**422,294**	**0.03**	65	885,170	100%
	without suspended ceil.	**0**	**0.00**	65	0	0%
Glass Block	Glass Block Glazing	**0**	**0.61**	65	0	0%
						0%
		lineal feet	Btuh / ft			
Perimeter Loss		**460**	**0**		0	0%
Slab loss		**140,765**	**0**		0	0%
	Building Volume (cu ft)	Air Changes per Hour	Conversion Factor			
Infiltration	**15,836,025**	**0.00**	0.018 cfm	65	185	0%
				Building Envelope Loads:	885,355	100%
	% of Occupied Rate					
Occupied Ventilation:	0%	**0**	cfm	65	0	0%
Unoccupied Ventilation:	**0%**	0	cfm	65	0	
				Total Heat Loss - Occupied Periods:	**885,355**	100%
				Total Heat Loss - Unoccupied Periods:	885,355	100%

Temp. °F	Total Hours	MMBtuOutput From Boiler 13,621 Btuh / Deg F	Proposed Annual MCF Input to Boiler
52.5	659	157	185
47.5	512	157	185
42.5	722	270	318
37.5	808	358	421
32.5	897	458	539
27.5	411	238	280
22.5	452	292	344
17.5	270	193	227
12.5	77	60	71
7.5	5	4	5
2.5	2	2	2
-2.5	0	-	-
-7.5	0	-	-
	4,815	2,190	2,576

Savings Summary		
Existing	Proposed	Savings
Annual MCF Input to Boiler	Annual MCF Input to Boiler	Annual MCF Input to Boiler
424	185	239
424	185	239
730	318	412
966	421	545
1,237	539	698
642	280	362
790	344	446
521	227	294
163	71	92
11	5	6
5	2	3
-	-	-
-	-	-
5,913	2,576	3,337

Title	**Kitchen HVAC Modifications**
ECM#	**10**
Project:	**SCI Houtzdale**
Site:	**SCI Houtzdale**

Given	Electric Energy Costs		$/kWh	
	Electric Demand Charge		$/kWd	
	Demand Utilization Factor (DUF)	*80%*		(Estimate, percent of time that fan system is on during peak demand period)
	Heating Costs		$/MCF	
	Cooling Costs		$/kWh	

Formula	**EXISTING CONDITIONS**	
	Existing Supply Fan kWh Used	(Supply Fan Horsepower x Load Factor x (% Airflow^Fan Exponent) x 0.746 / Motor Efficiency) x (Annual Op Hours x % of Time at % Airflow)
	Existing Supply Fan kW Demand	(Supply Fan Horsepower x Load Factor x (% Airflow^Fan Exponent) x 0.746 / Motor Efficiency) x (% of Time at % Airflow x DUF x Months/year)
	Existing Return Fan kWh Used	(Return Fan Horsepower x Load Factor x (% Airflow^Fan Exponent) x 0.746 / Motor Efficiency) x (Annual Op Hours x % of Time at % Airflow)
	Existing Return Fan kW Demand	(Return Fan Horsepower x Load Factor x (% Airflow^Fan Exponent) x 0.746 / Motor Efficiency) x (% of Time at % Airflow x DUF x Months/year)
	Existing Heating Required	(1.08 x [(Supply Fan CFM) x (% Airflow)] x (Temp lvg - Temp ent) x Op Hours x % of Time at % of Airflow x (Htg Hrs / Tot. Hrs per Yr) x % of Total Hrs Htg at Full Load) / 1,000,000
	Existing Cooling Required	(4.5 x [(Supply Fan CFM) x (% Airflow)] x (h ent - h lvg) x Op Hours x Bin Hrs at % of Airflow /12,000 x kW/ton
	PROPOSED CONDITIONS	
	Proposed Supply Fan kWh Used	(SF HP x Load Factor x (% Airflow^Fan Exponent) x 0.746 / Motor Efficiency) x (Annual Op Hours x % of Time at % Airflow)
	Proposed Supply Fan kW Demand	(SF HP x Load Factor x (% Airflow^Fan Exponent) x 0.746 / Motor Efficiency) x (% of Time at % Airflow x DUF x Months/year)
	Proposed Return Fan kWh Used	(RF HP x Load Factor x (% Airflow^Fan Exponent) x 0.746 / Motor Efficiency) x (Annual Op Hours x % of Time at % Airflow)
	Proposed Return Fan kW Demand	(RF HP x Load Factor x (% Airflow^Fan Exponent) x 0.746 / Motor Efficiency) x (% of Time at % Airflow x DUF x Months/year)
	Proposed Heating Required	(1.08 x [(SF CFM) x (% Airflow)] x (T lvg - T ent) x Op Hours x % of Time at % of Airflow x (Htg Hrs / Tot. Hrs per Yr) x % of Total Hrs Htg at Full Load) / 1,000,000
	Proposed Cooling Required	(4.5 x [(Supply Fan CFM) x (% Airflow)] x (h ent - h lvg) x Op Hours x Bin Hrs at % of Airflow /12,000 x kW/ton
	*NOTE: THIS CALCULATION IS DONE AT EVERY AIRFLOW	

Result	**Annual Existing Fan Consumption All AHUS**	**159,223**	**kWh**	=>	$	-
	Annual Existing Cooling Demand	**161**	**Tons**	=>		
	Annual Existing Heating Consumption	**22,825**	**CCF**	=>	$	-
	Annual Existing Cooling Consumption	**105,191**	**kWh**	=>	$	-
	TOTAL EXIST COST PER YEAR				$	-
	Annual Proposed Fan Consumption	**159,223**	**kWh**	=>	$	-
	Annual Proposed Cooling Demand	**93**	**Tons**	=>		
	Annual Proposed Heating Consumption	**13,775**	**CCF**		$	-
	Annual Proposed Cooling Consumption	**55,079**	**kWh**	=>	$	-
	TOTAL NEW COST PER YEAR				$	-
	Annual Fan Savings	**-**	**kWh**	=>	$	-
	Annual Demand Savings			=>	$	-
	Annual Heating Savings	**9,050**	**CCF**		$	-
	Annual Cooling Savings	**50,112**	**kWh**	=>	$	-
	TOTAL SAVINGS PER YEAR				$	-

Title Domestic Water Booster Pump System Improvements
ECM# 12
Project: SCI Houtzdale
Site: Pump House

Description Calculation to determine the energy savings to retrofit a constant volume air system to variable volume air system or to improve the operation of an existing variable air volume system.

PROPOSED CONDITIONS

Proposed Pump kWh Usec	HP	Load Factor	% Flow	Pump Exponent	Conversion (HP to kW)	Efficiency	Annual Op Hrs	% of Time at % Flow	kWh
at 100% Flow	50.0	0.70	100%	2.7	0.746	95%	8,760	5%	12,038
at 90% Flow	50.0	0.70	90%	2.7	0.746	95%	8,760	10%	18,115
at 80% Flow	50.0	0.70	80%	2.7	0.746	95%	8,760	15%	19,771
at 70% Flow	50.0	0.70	70%	2.7	0.746	95%	8,760	25%	22,977
at 60% Flow	50.0	0.70	60%	2.7	0.746	95%	8,760	25%	15,154
at 50% Flow	50.0	0.70	50%	2.7	0.746	95%	8,760	20%	7,410
at 40% Flow	50.0	0.70	40%	2.7	0.746	95%	8,760	0%	-
at 30% Flow	50.0	0.70	30%	2.7	0.746	95%	8,760	0%	-
at 20% Flow	50.0	0.70	20%	2.7	0.746	95%	8,760	0%	-
at 10% Flow	50.0	0.70	10%	2.7	0.746	95%	8,760	0%	-
TOTALS	==========>>								95,465

Proposed Pump kW Dem'c	HP	Load Factor	% Flow	Pump Exponent	Conversion (HP to kW)	Efficiency	% of Time at % Flow	DUF	Months	kW
at 100% Flow	50.0	0.70	100%	2.7	0.746	95%	5%	80%	12	13.2
at 90% Flow	50.0	0.70	90%	2.7	0.746	95%	10%	80%	12	19.9
at 80% Flow	50.0	0.70	80%	2.7	0.746	95%	15%	80%	12	21.7
at 70% Flow	50.0	0.70	70%	2.7	0.746	95%	25%	80%	12	25.2
at 60% Flow	50.0	0.70	60%	2.7	0.746	95%	25%	80%	12	16.6
at 50% Flow	50.0	0.70	50%	2.7	0.746	95%	20%	80%	12	8.1
at 40% Flow	50.0	0.70	40%	2.7	0.746	95%	0%	80%	12	-
at 30% Flow	50.0	0.70	30%	2.7	0.746	95%	0%	80%	12	-
at 20% Flow	50.0	0.70	20%	2.7	0.746	95%	0%	80%	12	-
at 10% Flow	50.0	0.70	10%	2.7	0.746	95%	0%	80%	12	-
TOTALS	==========>>									104.6

Result

Annual Exist. Pump Consumption	150,725	kWh	=>	$	-
Annual Exist. Demand	165	kW	=>	$	-
TOTAL EXIST COST PER YEAR				$	-
Annual Proposed Pump Consumption	95,465	kWh	=>	$	-
Annual Proposed Demand	104.6	kW	=>	$	-
TOTAL NEW COST PER YEAR				$	-
Annual Fan Savings	55,259	kWh	=>	$	-
Annual Demand Savings	61	kW	=>	$	-
TOTAL SAVINGS PER YEAR				$	-

SAVINGS CALCULATION

Operations & Maintenance

O&M Cost Summaries

From Bill Norvell files provided on 9/4/2019 as well as emails dated 10/15/2019, 10/28/2019 & 12/11/2019

ITEM		Value	From	To	Value Used	ECM Applied	Notes
Ash removal	$	108,498	Jan-16	Jan-18	$36,166	3a	
Micronizer Maintenance	$	130,747	Jan-16	Jan-18	$65,000	3a	Based upon full rebuild each year
Bag House Filters	$	35,110	Jan-16	Jan-18	$11,703	3a	
Water Treatment Chemicals	$	47,431	Jan-16	Jan-18	$7,905	3a	
Chiller Repairs	$	86,541	Jan-16	Jan-17	$28,847	6	Does not include any repairs in 2018
Boiler Repairs	$	139,785	Jan-16	Jan-18	$46,595		New data provided by BN for boilers
Air Compressors repairs & service	$	24,156	Jan-16	Jan-17	$8,052	3a	Does not include any service/repairs in 2018
CHW & HW Leaks	$	63,000	Jan-16	Jan-18	$42,411	4a & 4b	includes both labor plus materials; split evenly between ECMs
	$	635,268			$246,680		

Lighting O&M Savings		Existing System						New System			Savings
ECM - 1, 1.1, 2: Lighting Upgrades		Average cost	Average Life (Hrs)	Exist. System Life	Exist System Life	Yrs. Remaining	Cost/Yr.	New System Life	Yrs. Remaining	Cost / Yr.	$ Saved/Yr.
# Existing Lamps	15,453	$4	20,000	0.5	10,000	2.08	1.92	50,000	10.42	0.38	$ 23,729
# Existing Ballast	6,585	$10	75,000	0.5	37,500	7.81	1.28	75,000	15.63	0.64	$ 4,213

Appendix C

Equipment Cut Sheets

Appendix C

Equipment Cut Sheets

PRODUCT CUT SHEETS

ECM-1 LED Lighting Upgrades
ECM-2 Lighting Controls

Lumination™ LED Luminaires

LED Recessed Luminaire

LPL22 Value Series – Panel Light Generation B

Project name _____

Date _____

Type _____

Product Description:

GE Lumination™ LPL Series Recessed LED Luminaires are a value product for commercial ceilings providing uniformity, efficiency and reduced glare for T-grid ceiling applications. For the premium reveal® TriGain™ Architectural flat panel design, please see details for the LET series. The LPL lumen maintenance of greater than L70 at 50,000 hours operation, allows for lower maintenance costs. It is suitable for indoor general lighting for both new construction and retrofit when luminaire's are being replaced. The uniform light across the diffuser offers a distinctive, better look than traditional LED "two strip troffers". End users can see the difference and enjoy the fresh new look of an LED luminaire.

Product Dimensions:

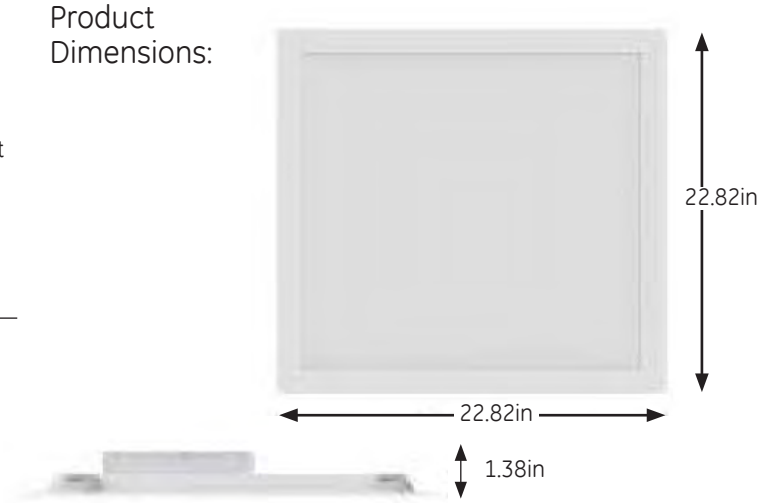

Performance Summary:

Light Output Range: 2450/3750/4500 lumens (Field Switchable)
CRI: 80+, R9 >0
CCT: 3500K/4000K
Efficacy: 114 LPW
Input Voltage: 120V-277V
Wattage Range: 19.5/32.5/39.5 watts
Rated Luminaire Lumen Depreciation: L70@50,000 hours
Limited Warranty: 5 Years

Certified by:

c UL us LISTED

Daintree WIRELESS CONTROLS

Note: Test data for this product meets utility rebate consortium requirements. The consortium Name/logo is not allowed to be used until approvals are completed. This is in process and may be approved at any time. It can be checked at www.designlights.org/OPL

Ordering Information:

LPL	22	B	0	3X	MM	XXX	VQ	LT	WHTE	__
FAMILY	FIXTURE TYPE	GENERATION	VOLTAGE	NOMINAL LUMENS	DISTRIBUTION	CRI/CRT	CONTROLS	MOUNTING	FINISH	OPTIONS
LPL = Lumination Panel Light	**22** = 2' x 2'	**B** = 2nd Generation	**0** = 120-277V	**3X** = Nominal Lumen Level	**MM** = Med. Lambertian	**835** = 80CRI, 3500K **840** = 80CRI, 4000K	**VQ** = 0-10V Dimming	**LT** = T-Grid	**WHTE** = White	All options are sold separately as accessories, please see below

EXAMPLE CONFIGURATIONS	LUMINAIRE LUMENS (SWITCHABLE[4])	LUMINAIRE TOTAL SYSTEM WATTS	LUMINAIRE LPW	
LPL22B03XMM835VQLTWHTE	2450/3750/4500	19.5/32.5/39.5	114	YES
LPL22B03XMM840VQLTWHTE	2450/3750/4500	19.5/32.5/39.5	114	YES

Ordering Notes:

1. **ALL LPL UNITS ARE PRICED AS SINGLE UNITS AND MUST BE ORDERED AS SINGLE UNITS IN EVEN QUANTITIES AS THIS PRODUCT IS PACKED TWO PER BOX. IT SHOULD BE NOTED IN RECEVING DOCUMENTS THAT ONE BOX HAS TWO UNITS AND SHOULD BE RECIEVED AS TWO UNITS.**
2. See accessories for wireless and sensor options
3. All options are accessories that are quickly and easily attached and/or wired to the luminaire in the field by the installer.
4. Fixture is field configurable for three different lumen/wattage levels with a switch. Switch default is the middle level (3750 Lumens, 32.5 Watts).

ACCESSORIES	DESCRIPTION CODE	PRODUCT CODE
Drywall Mount Kit 2 x 2	GESK07	67657
2x2 Surface Mount Kit for Backlit T-Grid	B22 SMK	212462
347V kit	LFAMBADVQFA	93071580
EMBB kit	LFAMBA0VQFAEL	93071576
Wireless Enabled, Daintree Compatible kit (most commonly used option for Daintree)	LCAMBA0TQFA	93071586
Wireless Enabled, Daintree Compatible with Daintree WFA 100 kit (allows for field connectivity to remote sensor)	LCAMBA0TSFA	93071585
Wireless Enabled, Daintree Compatible + EMBB kit	LCAMBA0TQFAEL	93071579
Wireless Enabled, Daintree Compatible with Daintree WFA 100 + EMBB kit	LCAMBA0TSFAEL	93071578
Wireless Enabled, Daintree Compatible with Daintree WFA 100 + Emergency Bypass kit (Dual Shunt Relay to be used with building generator backup systems to override dimming - Contact manufacturer prior to ordering to confirm application)	LCAMBA0TSFAB2	93071582
Digital Input Driver (does not have 0-10v input) that uses a field installed sensor accessory (in the ceiling -not the fixture) that is Daintree compatible such as EZ Connect or Enterprise sensors	LCAMBA0SQFA (Interface Module T1, TT, TZ,TM)	93117531

SENSOR KIT (FOR LCAMBA0SQFA CONTROL ACCESSORY ONLY)		PRODUCT CODE
Dantree One/EZ Connect:	LSAATT/T1FM6 (WIT100 Sensor Kit)	93098472
Daintree Enterprise:	LSAATZFM6(WIZ100 Sensor Kit)	93098473
Daintree Ent. Multi Sensor:	LSAATMFM6 (WMZ10 Sensor Kit)	93119594

current powered by GE

Lumination™ LED Luminaires

LED Recessed Luminaire

LPL22 Value Series – Panel Light Generation B

Project name _____

Date _____

Type _____

Product Specifications:

LED & Optical:

CRIa: >80
R9: >0
Color Consistency: Central limit 4-Step MacAdam Ellipse with LED recipe approach for tight unit to unit color control
Rated Luminaire Lumen Depreciation: L70@50,000 Hours
TM-21 LED Data:
Estimated Lumen maintenance: L84>100,000 hrs
Reported: L90>60,000 hrs

Electrical System:

Input Voltage: 120-277
Input Frequency: 50/60 Hz
System Power Factor (PF): >0.9*
Total Harmonic Distortion (THD): <20%*
LED Driver Type: Class 2
**PF and THD may vary with options*

Ratings and Evaluations:

Operating Temperature: 0°C to +40°C
Storage Temperature: -40°C to +70°C
Surge Protection: ANSI C82.77 Complaint
Location: Damp
Insulation Contact: Type IC Rated
Safety: UL/cUL Listed
Environmental: RoHS compliant
Utility: Test data for this product meets utility rebate consortium requirements. The consortium Name/logo is not allowed to be used until approvals are completed. This is in process and may be

Construction & Finish:

Housing: Durable, long lasting steel construction. Aluminum extruded frame
Lensing: Precision formed optical assembly.
Paint: Post painted powder coat finish
Weight: <10 pounds

Photometrics:

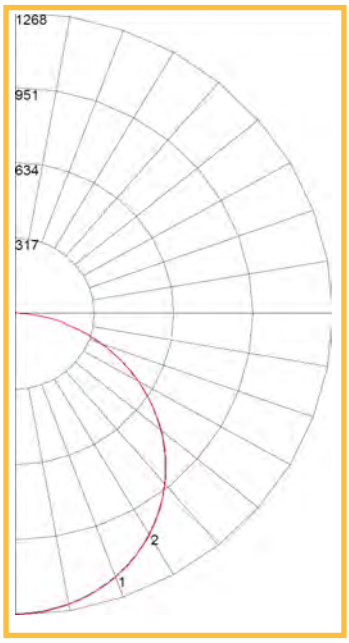

ZONAL LUMEN SUMMARY

Zone	Lumens
0-10	119.70
10-20	342.94
20-30	520.12
30-40	627.96
40-50	653.32
50-60	594.68
60-70	464.18
70-80	283.29
80-90	84.93
90-100	0.08
100-110	0.54
110-120	1.31
120-130	1.62
130-140	1.83
140-150	1.76
150-160	1.18
160-170	0.53
170-180	0.04

Warranty:

System Warranty: 5 Year

Controls:

Standard Dimming: 0-10VDC
Minimum Dimming: 10% of rated lumen LED drive current. Contact manufacturer for other available options.
Optional Dimming: Contact Manufacturer
Wireless Networking and Sensing Device Options*

Daintree One: Wireless fixture integrated sensor that is perfect for single fixtures or small area applications. Standalone wireless lighting controls that work independently. Comes preset from the factory, yet can be upgraded to Daintree EZ Connect and/or Daintree Enterprise in the future. Factory preset to shut off 20 minutes after the space is vacated of occupants. Daylight harvesting preset enabled on.

Daintree EZ Connect: Wireless fixture integrated sensor that is designed for room based controls where a group of fixtures communicate to each other and communicate wirelessly in chorus as a system. The advantage is simple, minimal field based commissioning. Factory preset to shut off 20 minutes after the space is vacated of occupants. Daylight harvesting is set in initial preset. EZ Connect wireless lighting controls are set up and/or can be changed by the Daintree EZ Connect application that can be downloaded via an iOS smart device.

Daintree Enterprise: Wireless fixture integrated sensor technology that is ideal for multi-site lighting system management. System requires software and commissioning. Monitor multiple controls, lighting, energy, HVAC with unlimited potential for other (3rd party) sensor integration. "Open on the bottom" means that ZigBee communication protocol is an industry standard with countless wireless hardware sensing options. "Open on the top" means that the data from the sensors can be used by any 3rd party software supplier/developer, be it part of a complete BMS system or simple API (Application Programming Interface or "App"). Daintree Enterprise offers a complete future proof solution from any Daintree enabled installed base of fixtures.

Power Addition for Controls: <2 watts
**Contact Factory for specific option availability*

Mounting:

Typical Mounting: Fits standard T-Bar grid (drop ceilings)
Wiring Access: ½" trade-size KOs
T-Grid Clips: T-grid clips attached, with holes for seismic wires
Surface Mounting: Surface mount kit available.

Accessories & Options:

Optional Emergency Battery: Provides 90-minutes of Emergency lighting.

For more information and access to all of our resources, including our design tool visit: www.LED.com

current powered by GE

All trademarks are the property of their respective owners. Information provided is subject to change without notice. All values are design or typical values when measured under laboratory conditions. Current, powered by GE is a business of the General Electric Company.
© 2019 GE.

All LED Emergency Exit Combo Unit

All LED Combo Exit Signs

120 or 277 Voltage, Damp Location

Catalog Number

Notes

Type

Features and Benefits:

- 120/277 VAC dual voltage operation
- LVD (Low Voltage Disconnect) prevents battery from deep discharge
- 7 year, maintenance-free Ni-Cad battery
- 90 minute run time in emergency mode
- Mounting canopy provided - top end or back mounting
- V-0 flame retardant

Dimensions:

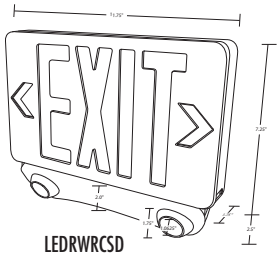

LEDRWRCSD

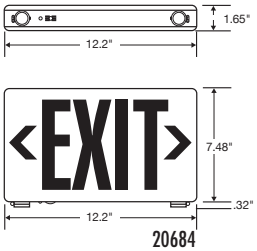

20684

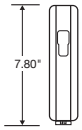

LED20784

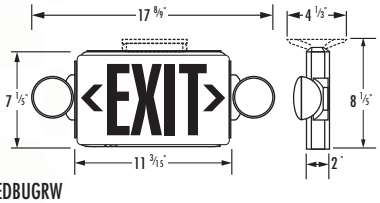

LEDBUGRW

Warranties & Compliances:	TCP Part #	Description	LED Color	Housing Color	AC/BBUP
	Ordering Information:				
	20684	LED Exit EMG Combo, Red Letters, White Housing	Red	White	BBUP
	20685	LED Exit EMG Combo, Green Letters, White Housing	Green	White	BBUP
	LED20723	LED Combo Universal Face, Red Letters, White Housing	Red	White	BBUP
	LED20725	LED Combo Universal Face, Green Letters, White Housing	Green	White	BBUP
	LED20784B	LED Combo Universal Face, Red Letters, Black Housing, Remote Capable	Red	Black	BBUP
	LED20785B	LED Combo Universal Face, Green Letters, Black Housing, Remote Capable	Green	Black	BBUP
	LED20784	LED Combo Universal Face, Red Letters, White Housing, Remote Capable	Red	White	BBUP
	LED20785	LED Combo Universal Face, Green Letters, White Housing, Remote Capable	Green	White	BBUP
	LEDRWRCSD	LED,Compact Red Combo White Housing Remote Capable Self Diagnostic	Red	White	BBUP
	LEDGWRCSD	LED,Compact Green Combo White Housing Remote Capable Self Diagnostic	Green	White	BBUP
	LEDBUGRW	LED BugEye Combo Red Letters with White Housing	Red	White	BBUP
	LEDBUGGW	LED BugEye Combo Green Letters with White Housing	Green	White	BBUP
	LEDBUGRWB	LED BugEye Combo Red Letters with Black Housing	Red	Black	BBUP
	LEDBUGGWB	LED BugEye Combo Green Letters with Black Housing	Green	Black	BBUP

UL US ETL LISTED

NFPA® NATIONAL FIRE PROTECTION ASSN.

Ni-Cad Battery
7 YEAR WARRANTY

Sealed Lead Acid
1 YEAR WARRANTY

Electronics
5 YEAR WARRANTY

LED Strip
25 YEAR WARRANTY

For the most up-to-date specs, please visit www.tcpi.com

Accessories

20684/20685

20704	Canopy
206HDS	Replacement Heads For Combo
COMBOWG	Combo Wire Guard
COMBOBG	Combo Bubble Guard

LED20723/LED20785

20704	Canopy
LEDRH1	LED Remote Head Single SDT
LEDRH2	LED Double Remote Head SDT
LEDRH1B	LED Remote Head Single SDT Black
LEDRH2B	LED Double Remote Head SDT Black
LEDRH1WLSDT	Wet Location LED Single Head
LEDRH2WLSDT	Wet Location LED 2 Remote Head
COMBOWG	Combo Wire Guard
COMBOBG	Combo Bubble Guard

LEDGWRCSD

20704	Canopy
COMBOWG	Combo Wire Guard
COMBOBG	Combo Bubble Guard
LEDSNAPRH1	LED Single WH Remote Head Snap
LEDSNAPRH2	LED Double Head Snap

LEDBUGRW/LEDBUGGW/LEDBUGRWB/LEDBUGGWB

20704	Canopy
COMBOWG	Combo Wire Guard
COMBOBG	Combo Bubble Guard

TCP, Inc.
325 Campus Dr. | Aurora, Ohio 44202 | P: 1-800-324-1496 | F: 330-995-6188 | tcpi.com

©TCP, Inc. SEP 2013/51219

Lumination™ LED Luminaires

LED Recessed Luminaire
LPL24 Value Series – Panel Light Generation B

Project name _____
Date _____
Type _____

Product Description:

GE Lumination™ LPL Series Recessed LED Luminaires are a value product for commercial ceilings providing uniformity, efficiency and reduced glare for T-grid ceiling applications. For the premium reveal® TriGain™ Architectural flat panel design, please see details for the LET series. The LPL lumen maintenance of greater than L70 at 50,000 hours operation, allows for lower maintenance costs. It is suitable for indoor general lighting for both new construction and retrofit when luminaire's are being replaced. The uniform light across the diffuser offers a distinctive, better look than traditional LED "two strip troffers". End users can see the difference and enjoy the fresh new look of an LED luminaire.

Performance Summary:

Light Output Range: 3500/4550/5250 lumens (Field Switchable)
CRI: 80+, R9 >0
CCT: 3500K/4000K
Efficacy: 118 LPW
Input Voltage: 120V-277V
Wattage Range: 27/37.5/44.5 watts
Rated Luminaire Lumen Depreciation: L70@50,000 hours
Limited Warranty: 5 Years

Product Dimensions:

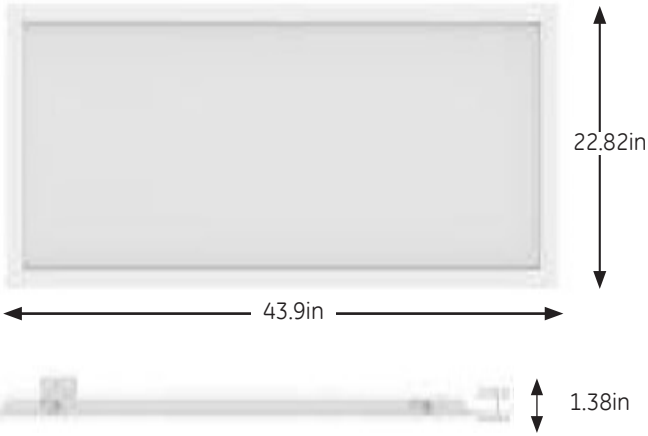

Certified by:

c UL us LISTED

Daintree WIRELESS CONTROLS

Note: Test data for this product meets utility rebate consortium requirements. The consortium Name/logo is not allowed to be used until approvals are completed. This is in process and may be approved at any time. It can be checked at www.designlights.org/OPL

Ordering Information:

LPL	24	B	0	4X	MM	XXX	VQ	LT	WHTE	__
FAMILY	FIXTURE TYPE	GENERATION	VOLTAGE	NOMINAL LUMENS	DISTRIBUTION	CRI/CRT	CONTROLS	MOUNTING	FINISH	OPTIONS
LPL = Lumination Panel Light	**24** = 2' x 4'	**B** = 2nd Generation	**0** = 120-277V	**4X** = Nominal Lumen Level	**MM** = Med. Lambertian	**835** = 80CRI, 3500K **840** = 80CRI, 4000K	**VQ** = 0-10V Dimming	**LT** = T-Grid	**WHTE** = White	All options are sold separately as accessories, please see below

EXAMPLE CONFIGURATIONS	LUMINAIRE LUMENS (SWITCHABLE[4])	LUMINAIRE TOTAL SYSTEM WATTS	LUMINAIRE LPW	
LPL24B04XMM835VQLTWHTE	3500/4550/5250	27/37.5/44.5	118	YES
LPL24B04XMM840VQLTWHTE	3500/4550/5250	27/37.5/44.5	118	YES

Ordering Notes:

1. **ALL LPL UNITS ARE PRICED AS SINGLE UNITS AND MUST BE ORDERED AS SINGLE UNITS IN EVEN QUANTITIES AS THIS PRODUCT IS PACKED TWO PER BOX. IT SHOULD BE NOTED IN RECEVING DOCUMENTS THAT ONE BOX HAS TWO UNITS AND SHOULD BE RECIEVED AS TWO UNITS.**
2. See accessories for wireless and sensor options
3. All options are accessories that are quickly and easily attached and/or wired to the luminaire in the field by the installer.
4. Fixture is field configurable for three different lumen/wattage levels with a switch. Switch default is the middle level (3750 Lumens, 32.5 Watts).

ACCESSORIES	DESCRIPTION CODE	PRODUCT CODE
Drywall Mount Kit 2 x 4	GESK07	69523
2x4 Surface Mount Kit for Backlit T-Grid	B24 SMK	212463
347V kit	LFAMBADVQFA	93071580
EMBB kit	LFAMBA0VQFAEL	93071576
Wireless Enabled, Daintree Compatible kit (most commonly used option for Daintree)	LCAMBA0TQFA	93071586
Wireless Enabled, Daintree Compatible with Daintree WFA 100 kit (allows for field connectivity to remote sensor)	LCAMBA0TSFA	93071585
Wireless Enabled, Daintree Compatible + EMBB kit	LCAMBA0TQFAEL	93071579
Wireless Enabled, Daintree Compatible with Daintree WFA 100 + EMBB kit	LCAMBA0TSFAEL	93071578
Wireless Enabled, Daintree Compatible with Daintree WFA 100 + Emergency Bypass kit (Dual Shunt Relay to be used with building generator backup systems to override dimming - Contact manufacturer prior to ordering to confirm application)	LCAMBA0TSFAB2	93071582
Digital Input Driver (does not have 0-10v input) that uses a field installed sensor accessory (in the ceiling -not the fixture) that is Daintree compatible such as EZ Connect or Enterprise sensors	LCAMBA0SQFA (Interface Module T1, TT, TZ, TM)	93117531

SENSOR KIT (FOR LCAMBA0SQFA CONTROL ACCESSORY ONLY)		PRODUCT CODE
Dantree One/EZ Connect:	LSAATT/T1FM6 (WIT100 Sensor Kit)	93098472
Daintree Enterprise:	LSAATZFM6(WIZ100 Sensor Kit)	93098473
Daintree Ent. Multi Sensor:	LSAATMFM6 (WMZ10 Sensor Kit)	93119594

current
powered by GE

Lumination™ LED Luminaires

LED Recessed Luminaire

LPL24 Value Series – Panel Light Generation B

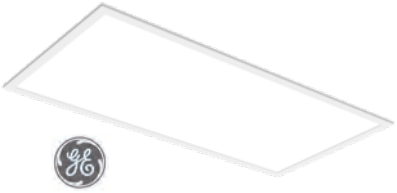

Project name _____

Date _____

Type _____

Product Specifications:

LED & Optical:

CRIa: >80
R9: >0
Color Consistency: Central limit 4-Step MacAdam Ellipse with LED recipe approach for tight unit to unit color control
Rated Luminaire Lumen Depreciation: L70@50,000 Hours
TM-21 LED Data:
Estimated Lumen maintenance: L84>100,000 hrs
Reported: L90>60,000 hrs

Electrical System:

Input Voltage: 120-277
Input Frequency: 50/60 Hz
System Power Factor (PF): >0.9*
Total Harmonic Distortion (THD): <20%*
LED Driver Type: Class 2
**PF and THD may vary with options*

Ratings and Evaluations:

Operating Temperature: 0°C to +40°C
Storage Temperature: -40°C to +70°C
Surge Protection: ANSI C82.77 Complaint
Location: Damp
Insulation Contact: Type IC Rated
Safety: UL/cUL Listed
Environmental: RoHS compliant
Utility: Test data for this product meets utility rebate consortium requirements. The consortium Name/logo is not allowed to be used until approvals are completed. This is in process and may be approved at any time. It can be checked at www.designlights.org/QPL

Construction & Finish:

Housing: Durable, long lasting steel construction. Aluminum extruded frame
Lensing: Precision formed optical assembly.
Paint: Post painted powder coat finish
Weight: <16 pounds

Photometrics:

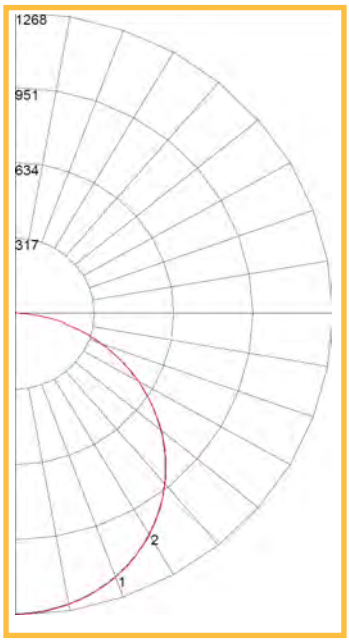

ZONAL LUMEN SUMMARY

Zone	Lumens
0-10	119.70
10-20	342.94
20-30	520.12
30-40	627.96
40-50	653.32
50-60	594.68
60-70	464.18
70-80	283.29
80-90	84.93
90-100	0.08
100-110	0.54
110-120	1.31
120-130	1.62
130-140	1.83
140-150	1.76
150-160	1.18
160-170	0.53
170-180	0.04

Warranty:

System Warranty: 5 Year

Controls:

Standard Dimming: 0-10VDC
Minimum Dimming: 10% of rated lumen LED drive current. Contact manufacturer for other available options.
Optional Dimming: Contact Manufacturer
Wireless Networking and Sensing Device Options*

Daintree One: Wireless fixture integrated sensor that is perfect for single fixtures or small area applications. Standalone wireless lighting controls that work independently. Comes preset from the factory, yet can be upgraded to Daintree EZ Connect and/or Daintree Enterprise in the future. Factory preset to shut off 20 minutes after the space is vacated of occupants. Daylight harvesting preset enabled on.

Daintree EZ Connect: Wireless fixture integrated sensor that is designed for room based controls where a group of fixtures communicate to each other and communicate wirelessly in chorus as a system. The advantage is simple, minimal field based commissioning. Factory preset to shut off 20 minutes after the space is vacated of occupants. Daylight harvesting is set in initial preset. EZ Connect wireless lighting controls are set up and/or can be changed by the Daintree EZ Connect application that can be downloaded via an iOS smart device.

Daintree Enterprise: Wireless fixture integrated sensor technology that is ideal for multi-site lighting system management. System requires software and commissioning. Monitor multiple controls, lighting, energy, HVAC with unlimited potential for other (3rd party) sensor integration. "Open on the bottom" means that ZigBee communication protocol is an industry standard with countless wireless hardware sensing options. "Open on the top" means that the data from the sensors can be used by any 3rd party software supplier/developer, be it part of a complete BMS system or simple API (Application Programming Interface or "App"). Daintree Enterprise offers a complete future proof solution from any Daintree enabled installed base of fixtures.

Power Addition for Controls: <2 watts
**Contact Factory for specific option availability*

Mounting:

Typical Mounting: Fits standard T-Bar grid (drop ceilings)
Wiring Access: ½" trade-size KOs
T-Grid Clips: T-grid clips attached, with holes for seismic wires
Surface Mounting: Surface mount kit available.

Accessories & Options:

Optional Emergency Battery: Provides 90-minutes of Emergency lighting.

For more information and access to all of our resources, including our design tool visit: www.LED.com

current powered by GE

All trademarks are the property of their respective owners. Information provided is subject to change without notice. All values are design or typical values when measured under laboratory conditions. Current, powered by GE is a business of the General Electric Company.
© 2019 GE.

LED A-Lamps

OMNI-DIRECTIONAL • ALL-PURPOSE • 3-WAY

TCP's LED A-lamps provide the lighting you need at a cost you will love. Advanced factory techniques and rigorous testing ensure each lamp is perfect from day one. Install a LED A-lamp wherever you would a traditional lamp and see the improvement.

LIMITLESS OPTIONS FOR THE FOLLOWING APPLICATIONS

- General lighting
- Table lamps
- Floor lamps
- Sconces
- Ceiling fixtures

FEATURES	BENEFITS
Up to 85% less energy than halogen alternatives	Instant energy savings
Long life	Minimizes replacement and maintenance costs
Very low heat generation	Perfect for sensitive display lighting such as art galleries
Excellent color consistency and CRI	Enhances colors of focal point while maintaining uniformity throughout lighting installation from lamp to lamp
UL approved for damp location	Can be used outdoors when protected from elements—withstands humidity indoors/outdoors
Durable plastic housing	Lower the risk of injury and breakage
ANSI construction compliant	Fits all A-lamp installations

Dims to ≤ 10% of full light level when applicable

SPECIFICATIONS

Input Line Voltage ..... 120 VAC
Input Line Frequency..... 50/60HZ
Lamp Life (Rated) ..... 10,000, 15,000 or 25,000 hour options
Minimum Starting Temp ..... -30°C
Maximum Operating Temp..... 40°C
CRI..... 80
Suitable for use in totally enclosed fixtures.
(Vapor tight or jelly jar applications may reduce life)

c UL us LISTED

1 YEAR WARRANTY * 10,000 HOUR LAMPS

3 YEAR WARRANTY* 15,000 HOUR LAMPS

5 YEAR WARRANTY* 25,000 HOUR LAMPS

*Based on 12 hours use per day

Do not use more than 2 bulbs in an enclosed fixture.
If fixture is manufactured for incandescent bulbs, use no higher than the LED equivalent wattage, as shown on this spec sheet.

40W NON DIMMABLE | 40W DIMMABLE | 60 & 75W NON DIMMABLE | 60 & 75W DIMMABLE | 60W GU24 DIMMABLE | 100W NON DIMMABLE | 100W DIMMABLE | 100W GU24 DIMMABLE | 40/60/100W 3-WAY | 60W DIMMABLE WET LOCATION

TCP®
325 Campus Dr. | Aurora, Ohio 44202 | P: 800-324-1496 | tcpi.com

LED A-Lamps

OMNI-DIRECTIONAL • ALL-PURPOSE • 3-WAY

ITEM #	DESCRIPTION	ENERGY STAR	VOLTAGE	WATTS	INCANDESENT WATTS	LPW	LUMENS	COLOR	HOURS	CRI	MOL (inches)	DIA (inches)	BASE	WARRANTY YEARS	CASE QUANTITY
LED 40W Equivalent Options															
6W A19 A-Lamp • Non Dimmable • 15,000 Hour															
L6A19N1527K	LED 6W A19 ND 2700K	★	120	6	40	80.0	480	2700K	15,000	80	4.0	2.2	E26	3	12
L6A19N1530K	LED 6W A19 ND 3000K	★	120	6	40	80.0	480	3000K	15,000	80	4.0	2.2	E26	3	12
L6A19N1541K	LED 6W A19 ND 4100K	★	120	6	40	80.0	480	4100K	15,000	80	4.0	2.2	E26	3	12
L6A19N1550K	LED 6W A19 ND 5000K	★	120	6	40	80.0	480	5000K	15,000	80	4.0	2.2	E26	3	12
6W A19 A-Lamp • Dimmable • 25,000 Hour															
L40A19D2524K	LED 6W A19 DIM 2400K		120	6	40	62.5	375	2400K	25,000	80	4.1	2.4	E26	5	12
L40A19D2527K	LED 6W A19 DIM 2700K	★	120	6	40	80.0	480	2700K	25,000	80	4.1	2.4	E26	5	12
L40A19D2530K	LED 6W A19 DIM 3000K	★	120	6	40	80.0	480	3000K	25,000	80	4.1	2.4	E26	5	12
L40A19D2541K	LED 6W A19 DIM 4100K	★	120	6	40	83.3	500	4100K	25,000	80	4.1	2.4	E26	5	12
L40A19D2550K	LED 6W A19 DIM 5000K	★	120	6	40	87.5	525	5000K	25,000	80	4.1	2.4	E26	5	12
LED 60W Equivalent Options															
9.5W A19 A-Lamp • Non Dimmable • 10,000 Hour															
L9A19N1027K4	LED 9.5W A19 ND 2700K 4 PACK		120	9.5	60	84.2	800	2700K	10,000	80	4.3	2.4	E26	1	12
L9A19N1030K4	LED 9.5W A19 ND 3000K 4 PACK		120	9.5	60	84.2	800	3000K	10,000	80	4.3	2.4	E26	1	12
L9A19N1041K4	LED 9.5W A19 ND 4100K 4 PACK		120	9.5	60	84.2	800	4100K	10,000	80	4.3	2.4	E26	1	12
9W A19 A-Lamp • Non Dimmable • 15,000 Hour															
L60A19N1527K	LED 9W A19 ND 2700K	★	120	9	60	88.9	800	2700K	15,000	80	4.3	2.4	E26	3	12
L60A19N1530K	LED 9W A19 ND 3000K	★	120	9	60	88.9	800	3000K	15,000	80	4.3	2.4	E26	3	12
L60A19N1541K	LED 9W A19 ND 4100K	★	120	9	60	94.4	850	4100K	15,000	80	4.3	2.4	E26	3	12
L60A19N1550K	LED 9W A19 ND 5000K	★	120	9	60	94.4	850	5000K	15,000	80	4.3	2.4	E26	3	12
9W A19 A-Lamp • Dimmable • 15,000 Hour															
L9A19D1527K	LED 9W A19 DIM 2700K	★	120	9	60	88.9	800	2700K	15,000	80	4.3	2.4	E26	3	12
L9A19D1527K24	LED 9W A19 DIM 2700K 24 PACK	★	120	9	60	88.9	800	2700K	15,000	80	4.3	2.4	E26	3	–
L9A19D1530K	LED 9W A19 DIM 3000K	★	120	9	60	88.9	800	3000K	15,000	80	4.3	2.4	E26	3	12
L9A19D1541K	LED 9W A19 DIM 4100K	★	120	9	60	91.7	825	4100K	15,000	80	4.3	2.4	E26	3	12
L9A19D1550K	LED 9W A19 DIM 5000K	★	120	9	60	91.7	825	5000K	15,000	80	4.3	2.4	E26	3	12
9W A19 A-Lamp • Dimmable • 25,000 Hour															
L9A19D2524K	LED 9W A19 DIM 2400K		120	9	60	77.7	700	2400K	25,000	80	4.3	2.4	E26	5	12
L9A19D2527K	LED 9W A19 DIM 2700K	★	120	9	60	88.9	800	2700K	25,000	80	4.3	2.4	E26	5	12
L9A19D2530K	LED 9W A19 DIM 3000K	★	120	9	60	88.9	800	3000K	25,000	80	4.3	2.4	E26	5	12
L9A19D2541K	LED 9W A19 DIM 4100K	★	120	9	60	91.7	825	4100K	25,000	80	4.3	2.4	E26	5	12
L9A19D2550K	LED 9W A19 DIM 5000K	★	120	9	60	91.7	825	5000K	25,000	80	4.3	2.4	E26	5	12
9W A19 A-Lamp • Allusion Dimmable • 25,000 Hour															
LED9A19DA	LED 9W A19 2000K - 2700K ALLUSION		120	9	60	72.2	650	2000K-2700K	25,000	80	4.6	2.4	E26	5	12
9.5W A19 Omni-Directional A-Lamp GU24 • Dimmable • 25,000 Hour															
LED10A19GUDOD27K	LED 9.5W A19 DIM OMNI 27K GU24	★	120	9.5	60	84.2	800	2700K	25,000	80	4.4	2.4	GU24	5	12
LED10A19GUDOD30K	LED 9.5W A19 DIM OMNI 30K GU24	★	120	9.5	60	89.5	850	3000K	25,000	80	4.4	2.4	GU24	5	12
LED10A19GUDOD41K	LED 9.5W A19 DIM OMNI 41K GU24	★	120	9.5	60	89.5	850	4100K	25,000	80	4.4	2.4	GU24	5	12
LED 75W Equivalent Options															
13.5W A19 A-Lamp • Non Dimmable • 15,000 Hour															
L11A19N1527K	LED 13.5W A19 ND 2700K	★	120	13.5	75	81.5	1100	2700K	15,000	80	4.4	2.4	E26	3	12
L11A19N1530K	LED 13.5W A19 ND 3000K	★	120	13.5	75	81.5	1100	3000K	15,000	80	4.4	2.4	E26	3	12
L11A19N1541K	LED 13.5W A19 ND 4100K	★	120	13.5	75	81.5	1100	4100K	15,000	80	4.4	2.4	E26	3	12
L11A19N1550K	LED 13.5W A19 ND 5000K	★	120	13.5	75	81.5	1100	5000K	15,000	80	4.4	2.4	E26	3	12

continued next page

ITEM #	DESCRIPTION	ENERGY STAR	VOLTAGE	WATTS	INCANDESENT WATTS	LPW	LUMENS	CCT	HOURS	CRI	MOL (inches)	DIA (inches)	BASE	WARRANTY YEARS	CASE QUANTITY
LED 75W Equivalent Options *continued*															
13.5W A19 A-Lamp • Dimmable • 25,000 Hour															
L11A19D2527K	LED 13.5W A19 DIM 2700K	★	120	13.5	75	81.5	1100	2700K	25,000	80	4.4	2.4	E26	5	12
L11A19D2530K	LED 13.5W A19 DIM 3000K	★	120	13.5	75	81.5	1100	3000K	25,000	80	4.4	2.4	E26	5	12
L11A19D2541K	LED 13.5W A19 DIM 4100K	★	120	13.5	75	81.5	1100	4100K	25,000	80	4.4	2.4	E26	5	12
L11A19D2550K	LED 13.5W A19 DIM 5000K	★	120	13.5	75	81.5	1100	5000K	25,000	80	4.4	2.4	E26	5	12
LED 100W Equivalent Options															
14W A19 A-Lamp • Non Dimmable • 10,000 Hour															
L16A19N1027K4	LED 14W A19 ND 2700K 4PK		120	14	100	107.1	1500	2700K	10,000	80	4.7	2.6	E26	1	12
L16A19N1041K4	LED 14W A19 ND 4100K 4PK		120	14	100	107.1	1500	4100K	10,000	80	4.7	2.6	E26	1	12
15.5W A19 A-Lamp • Non Dimmable • 15,000 Hour															
L16A19N1527K	LED 15.5W A19 ND 2700K	★	120	15.5	100	103.2	1600	2700K	15,000	80	4.7	2.6	E26	3	12
L16A19N1530K	LED 15.5W A19 ND 3000K	★	120	15.5	100	106.5	1650	3000K	15,000	80	4.7	2.6	E26	3	12
L16A19N1541K	LED 15.5W A19 ND 4100K	★	120	15.5	100	109.7	1700	4100K	15,000	80	4.7	2.6	E26	3	12
L16A19N1550K	LED 15.5W A19 ND 5000K	★	120	15.5	100	112.9	1750	5000K	15,000	80	4.7	2.6	E26	3	12
15W A19 A-Lamp • Dimmable • 15,000 Hour															
L15A21D1527K	LED 15W A19 DIM 2700K	★	120	15	100	106.7	1600	2700K	15,000	80	4.7	2.6	E26	3	12
L15A21D1530K	LED 15W A19 DIM 3000K	★	120	15	100	110.0	1650	3000K	15,000	80	4.7	2.6	E26	3	12
L15A21D1541K	LED 15W A19 DIM 4100K	★	120	15	100	113.3	1700	4100K	15,000	80	4.7	2.6	E26	3	12
L15A21D1550K	LED 15W A19 DIM 5000K	★	120	15	100	116.7	1750	5000K	15,000	80	4.7	2.6	E26	3	12
15W A19 A-Lamp • Dimmable • 25,000 Hour															
L15A19D2527K	LED 15W A19 DIM 2700K	★	120	15	100	106.7	1600	2700K	25,000	80	4.7	2.6	E26	5	12
L15A19D2530K	LED 15W A19 DIM 3000K	★	120	15	100	106.7	1600	3000K	25,000	80	4.7	2.6	E26	5	12
L15A19D2541K	LED 15W A19 DIM 4100K	★	120	15	100	106.7	1600	4100K	25,000	80	4.7	2.6	E26	5	12
L15A19D2550K	LED 15W A19 DIM 5000K	★	120	15	100	106.7	1600	5000K	25,000	80	4.7	2.6	E26	5	12
14W A21 A-Lamp GU24 • Dimmable • 25,000 Hour															
L14A21GUD2527K	LED 14W A21 DIM 2700K GU24	★	120	14	100	114.3	1600	2700K	25,000	80	5.2	2.4	GU24	5	12
L14A21GUD2530K	LED 14W A21 DIM 3000K GU24	★	120	14	100	114.3	1600	3000K	25,000	80	5.2	2.4	GU24	5	12
L14A21GUD2541K	LED 14W A21 DIM 4100K GU24	★	120	14	100	121.4	1700	4100K	25,000	80	5.2	2.4	GU24	5	12
L14A21GUD2550K	LED 14W A21 DIM 5000K GU24	★	120	14	100	121.4	1700	5000K	25,000	80	5.2	2.4	GU24	5	12
LED 40/60/100 3-Way Equivalent Options															
4/8/16W A21 3-Way A-Lamp • 25,000 Hour															
LED16A21D3WAY27K	LED 16W A21 2700K 3WAY	★	120	4/8/16	40/60/100	120/100/100	480/800/1600	2700K	25,000	80	4.9	2.6	E26	5	12
LED16A21D3WAY30K	LED 16W A21 3000K 3WAY	★	120	4/8/16	40/60/100	120/100/100	480/800/1600	3000K	25,000	80	4.9	2.6	E26	5	12
LED16A21D3WAY41K	LED 16W A21 4100K 3WAY	★	120	4/8/16	40/60/100	120/100/100	480/800/1600	4100K	25,000	80	4.9	2.6	E26	5	12
LED16A21D3WAY50K	LED 16W A21 5000K 3WAY	★	120	4/8/16	40/60/100	120/100/100	480/800/1600	5000K	25,000	80	4.9	2.6	E26	5	12
LED 60W Wet Location Equivalent Options															
9.5W A19 Omni-Directional Wet Location A-Lamp • Dimmable • 25,000 Hour															
LED10A19DOD27KW	LED 9.5W A19 DIM OMNI 27K WET	★	120	9.5	60	84.2	800	2700K	25,000	80	4.6	2.5	E26	5	12
LED10A19DOD30KW	LED 9.5W A19 DIM OMNI 30K WET	★	120	9.5	60	86.8	825	3000K	25,000	80	4.6	2.5	E26	5	12
LED10A19DOD41KW	LED 9.5W A19 DIM OMNI 41K WET	★	120	9.5	60	89.5	850	4100K	25,000	80	4.6	2.5	E26	5	12
LED10A19DOD50KW	LED 9.5W A19 DIM OMNI 50K WET	★	120	9.5	60	89.5	850	5000K	25,000	80	4.6	2.5	E26	5	12

For the most up-to-date specs, please visit www.tcpi.com

TECHNOLOGY CAST IN A BEAUTIFUL LIGHT

For over 20 years, TCP has been designing, developing and delivering energy-efficient lighting into the market. Thanks to our cutting-edge technology and manufacturing expertise, we have shipped billions of high quality lighting products. With TCP, you can count on a lighting product that is designed to meet the needs of the market — that transforms your surroundings and envelopes you in warmth — lighting that generates beauty with every flip of the switch.

LED

For more information on the quality and care TCP can deliver, call us at 800.324.1496 or visit tcpi.com

325 Campus Dr. | Aurora, Ohio 44202 | P: 800-324-1496 | F: 877-487-0516

©TCP OCT 2019/WF147865rev2

KT-LED54HID-EX39-840-D

HID REPLACEMENT LED LAMP

rev.1

DESCRIPTION

54W HID Replacement LED Lamp | 4000K | >83 CRI | IP64 Rated

LAMP TYPE:	HID Replacement LED
BASE TYPE:	EX39 (Mogul)
WATTAGE:	54W
COLOR TEMPERATURE:	4000K
METAL HALIDE EQUIVALENT:	250W
COLOR RENDERING INDEX (CRI):	>83
WARRANTY:	5 Years

PRODUCT FEATURES

- Replacement for Conventional Metal Halide Lamp
- Non-Dimmable; Do Not Dim
- 50,000+ Hour Lifetime
- Environmentally Friendly: No Mercury Used
- Instant Startup
- UL Listed
- DLC Listed
- Operating Temperature: -29ºC/-20ºF to 60ºC/140ºF
- Suitable for Use in Fully Enclosed Fixture
- Integral Driver, Eliminates the Need for External Driver or Ballast; Includes 4kV Surge Protection
- IP64 Rated; Integrated Heat Sink Quickly Dissipates Heat and Guides Water Intrusion Out of the Lamp
- Active Cooling Technology: When Internal Thermal Sensor Reaches 84°C, Lamp Power Reduces To 80% Of Max; When Sensor Cools To 65°C Lamp Powers Back Up To 100% Rated Power

OPERATING SPECIFICATIONS

ELECTRICAL CHARACTERISTICS

Input Voltage	Power Consumption	Power Factor	Input Current
120-277Vac	54W	>0.9	0.47A @ 120V 0.20A @ 277V

RATED LIFE

L70 (Hours)	50,000

PHOTOMETRIC CHARACTERISTICS

Color Temperature (CCT)	4000K
Luminous Flux	7560 lm
Color Rendering Index (CRI)	>83
Efficacy	140 lm/W
Visible Light Area	360°

SPECTRAL DISTRIBUTION

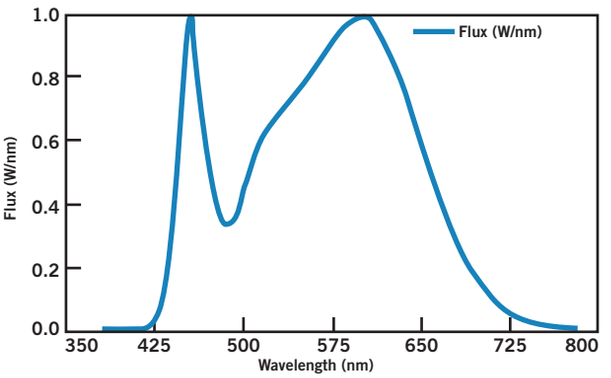

LUX DISTANCE CURVE

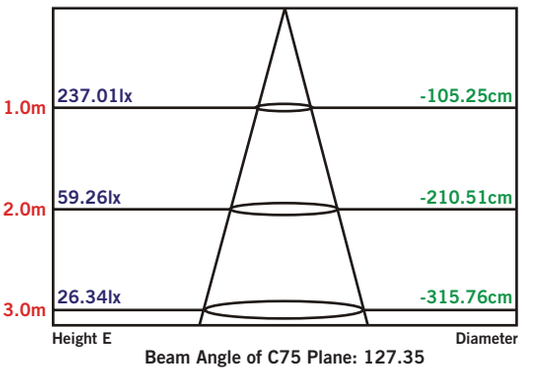

Keystone Technologies • 1390 Welsh Road, North Wales, PA 19454 • Phone (800) 464-2680 • Fax (888) 966-0556 • **www.keystonetech.com**

KT-LED54HID-EX39-840-D

HID REPLACEMENT LED LAMP

rev.1

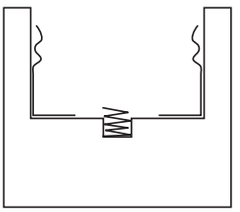

E39 MOGUL SOCKET

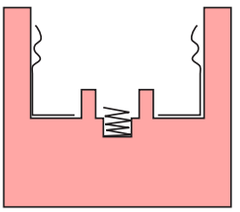

EX39 MOGUL SOCKET

EX39-based lamps will work in both E39 and EX39 sockets.

WIRING DIAGRAM

STEP 1
Disconnect power. Disconnect and remove existing ballast, capacitor, and/or ignitor (where applicable) from fixture.

STEP 2
Rewire for line voltage to the lamp socket.

STEP 3
Install new LED replacement lamp. Ensure lamp is operating properly when power is turned on.

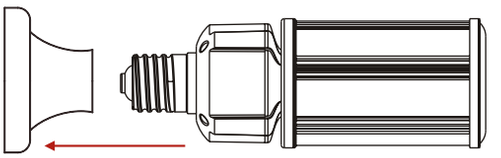

FIGURE 1

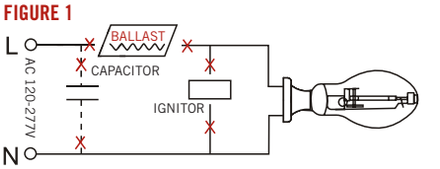

FIGURE 2

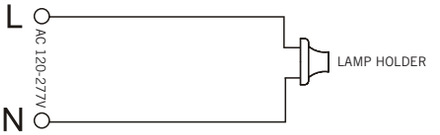

FIGURE 3

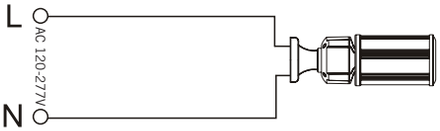

PHYSICAL CHARACTERISTICS

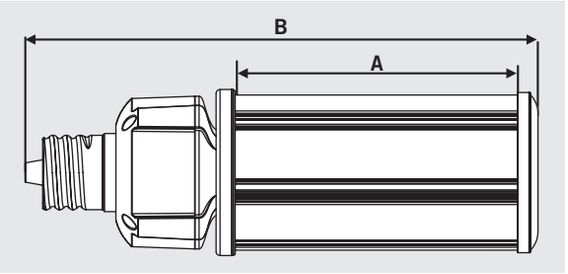

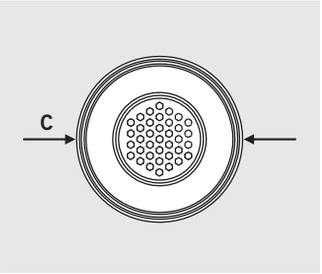

LAMP DIMENSIONS

A (Illuminated Length)	5.83”
B (Body Length)	10.70”
C (Diameter)	3.43”

BASE TYPE: EX39 (Mogul)

ORDERING INFORMATION

ORDER CODE	PACKAGING STYLE	PACK QTY.	ITEM STATUS
KT-LED54HID-EX39-840-D rev1	Distributor Pack (Individual Cartons)	16	Quick Ship

CATALOG NUMBER BREAKDOWN

KT-LED54HID-EX39-840-D rev1

- KT — Keystone Technologies
- LED — LED Lamp
- 54 — Wattage
- HID — Lamp Type
- EX39 — Base Type
- 840 — 800 Series, Color Temp.
- D — Direct Drive Series
- rev1 — LED Chip Revision

Keystone Technologies • 1390 Welsh Road, North Wales, PA 19454 • Phone (800) 464-2680 • Fax (888) 966-0556 • **www.keystonetech.com**

LumenChoice™

Type C LED Tube & Driver System

Only GE offers ONE LED Tube capable of MULTIPLE lumen outputs.

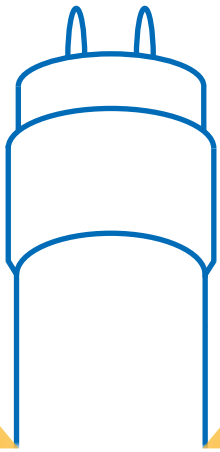

How It Works

GE's Type C system utilizes ONE LED tube to create MULTIPLE lumen outputs via the wattage of the selected LED driver.

Why LumenChoice™

- Streamline bill of materials
- Reduce and simplify inventory
- Adjust lumens/watts in field with LumenChoice™ driver

Simply select the driver that best fits your lumen output needs

Regular Driver
Available Today

LED Tube pairs with any wattage driver

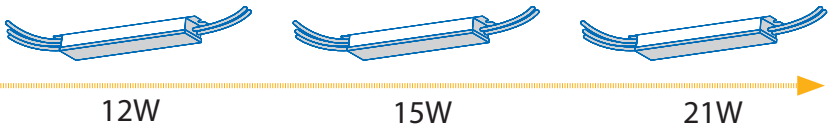

LumenChoice™ Driver
Limited Availability:
Rolling Transition From Regular Driver

Adjust the switches for desired performance.

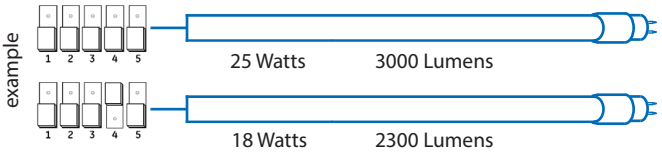

3 Easy Steps to Make Your Selection

1. Determine lamp lumen/ wattage objectives.

This will guide driver selection

2. Locate driver product code.

Driver selection based on:
- Number of lamps per fixture
- Lumen/wattage objectives

3. Choose tube product codes.

Tubes are distinguished by color temperature

Now you have the lamp and driver combinations for optimal lumen output(s) and energy usage.

current powered by GE

GE LumenChoice™ Type C LED Tube and Driver System

Convert your existing linear fluorescent fixture to LED lighting without needing a comprehensive reinstall. LED tubes are ideal for those seeking high energy savings with minimal installation time.

GE's LumenChoice™ Type C system utilizes one LED tube to create multiple lumen options via the wattage of the selected GE LED driver. See reverse for LED tubes and driver product details.

GE offers two driver platforms:

1) Regular Drivers-choose the desired fixed-wattage option based on the desired lumen output, i.e. 12W, 18W, 21W .

2) LumenChoice™ Drivers-adjust the wattage/lumen level on the driver, in the field i.e. toggle from 9W, 12W, 16W. This option simplifies bill of materials and inventory even further, and allows for making on-the-fly wattage/lumen adjustments at the point of installation. Low Watt drivers (LW) and High watt drivers (HW) come pre-set at 15W and 21W respectively and can easily be adjusted pre or post installation. All LumenChoice Drivers are dimming also, allowing for even more control over lumen output and efficiency.

FEATURES

- T8 & T5 Configurations
- 2', 3' & 4' Tubes
- Available in plastic & glass
- Assembled in USA options
- 1050 – 3000 lumens
- >120 total system lumens per watt (LPW)
- 3000K, 3500K, 4000K, 5000K and 6500K color temperatures
- T8 70,000 hr life rating & 7 year warranty
- T5 50,000 hr life rating & 5 year warranty
- UL and cUL
- Open or enclosed fixtures
- Damp rating
- Dimmable (with dimming driver)

PERFORMANCE BENEFITS

- Fast and Easy LED upgrade
- Low energy LFL replacement
- 2.3X Longer Life vs LFL (70,000 vs. 30,000 hours)
- Better quality of light –instant on
- Plastic-NSF rated, shatter resistant, prevents breakage and downtime
- Glass-270° light distribution
- Easy disposal, non-hazardous waste

General Lamp Product Information and Performance Data

General information						
Lamp Type	Base Type	CRI	Case Pack	Rated life (L70)	UL	Location Rating
T8	G13	80+	20	70,000	Yes	Damp
T5	G5	80+	20	50,000	Yes	Damp

Performance Data

The tables below show the LumenChoice LED tubes in combination with regular fixed wattage driver options and LumenChoice™ driver options that will result in different lumen levels.

GE LumenChoice™ Type C LED Tube and Driver System

Lamp Performance-Regular Drivers

2'-4' Glass and Regular Driver

4ft Glass				Driver	LED12T8/DR/XX	LED15T8/DR/XX	LED18T8/DR/XX	LED21T8/DR/XX	
Lamp Product Code	Lamp Description	CCT	DLC*	Wattage	12W	15W	18W	21W	Notes
34211	LEDT8/LC/G/4/830	3000K	Yes	Initial Lumens	1550	1900	2250	2650	
34227	LEDT8/LC/G/4/835	3500K	Yes		1600	1950	2300	2700	
34235	LEDT8/LC/G/4/840	4000K	Yes		1600	1950	2300	2700	
34239	LEDT8/LC/G/4/850	5000K	Yes		1600	1950	2300	2700	
4ft US Glass				Driver	LED12T8/DR/XX	LED15T8/DR/XX	LED18T8/DR/XX	LED21T8/DR/XX	
Lamp Product Code	Lamp Description	CCT		Wattage	12W	15W	18W	21W	
36385	LEDT8LC/G4/830US	3000K	Yes	Initial Lumens	1550	1900	2250	2650	
36386	LEDT8LC/G4/835US	3500K	Yes		1600	1950	2300	2700	
36389	LEDT8LC/G4/840US	4000K	Yes		1600	1950	2300	2700	
36390	LEDT8LC/G4/850US	5000K	Yes		1600	1950	2300	2700	
3ft Glass				Driver	LED12T8/DR/XX	LED15T8/DR/XX	LED18T8/DR/XX		
Lamp Product Code	Lamp Description	CCT		Wattage	12W	15W	18W		
36394	LEDT8/LC/G/3/830	3000K	-	Initial Lumens	1550	1900	2250		
36395	LEDT8/LC/G/3/835	3500K	-		1600	1950	2300		
36398	LEDT8/LC/G/3/840	4000K	-		1600	1950	2300		
36401	LEDT8/LC/G/3/850	5000K	-		1600	1950	2300		
2ft Glass				Driver	LED9T8/DR/XX	LED12T8/DR/XX			
Lamp Product Code	Lamp Description	CCT		Wattage	9W	12W			
36406	LEDT8/LC/G/2/830	3000K	-	Initial Lumens	1100	1450			
36408	LEDT8/LC/G/2/835	3500K	-		1200	1550			
36409	LEDT8/LC/G/2/840	4000K	-		1200	1550			
36413	LEDT8/LC/G/2/850	5000K	-		1200	1550			

2'-4' Plastic and Regular Driver

4ft Plastic				Driver	LED12T8/DR/XX	LED15T8/DR/XX	LED18T8/DR/XX	LED21T8/DR/XX	
Lamp Product Code	Lamp Description	CCT	DLC*	Wattage	12W	15W	18W	21W	Notes
34248	LEDT8/LC/4/830	3000K	Yes	Initial Lumens	1550	1850	2200	2600	
34249	LEDT8/LC/4/835	3500K	Yes		1550	1900	2250	2650	
34250	LEDT8/LC/4/840	4000K	Yes		1550	1900	2250	2650	
34253	LEDT8/LC/4/850	5000K	Yes		1550	1900	2250	2650	
34262	LEDT8/LC/4/865	6500K	Yes		1500	1800	2100	2500	
3ft Plastic				Driver	LED12T8/DR/XX	LED15T8/DR/XX	LED18T8/DR/XX		
Lamp Product Code	Lamp Description	CCT		Wattage	12W	15W	18W		
36416	LEDT8/LC/3/830	3000K	-	Initial Lumens	1500	1850	2200		
36419	LEDT8/LC/3/835	3500K	-		1550	1900	2250		
36420	LEDT8/LC/3/840	4000K	-		1550	1900	2250		
36435	LEDT8/LC/3/850	5000K	-		1550	1900	2250		
36436	LEDT8/LC/3/865	6500K	-		1500	1800	2150		
2ft Plastic				Driver	LED9T8/DR/XX	LED12T8/DR/XX			
Lamp Product Code	Lamp Description	CCT		Wattage	9W	12W			
36437	LEDT8/LC/2/830	3000K	-	Initial Lumens	1150	1500			
36439	LEDT8/LC/2/835	3500K	-		1250	1600			
36440	LEDT8/LC/2/840	4000K	-		1250	1600			
36453	LEDT8/LC/2/850	5000K	-		1250	1600			
36459	LEDT8/LC/2/865	6500K	-		1250	1600			

Updated / New Product

Information provided is subject to change without notice. Please verify all details with GE. All values are design or typical values when measured under laboratory conditions, and GE makes no warranty or guarantee, expressed or implied, that such performance will be obtained under end-use conditions.

* The life rating is based on the hours of operation the lamp will provide before reaching 70% of its original rating (L70)
# UL 1993 Environmental Requirements for LED LAMPS
Location, damp – Exterior or interior location that is normally or periodically subject to condensation of moisture in, on, or adjacent to, electrical equipment, and includes partially protected locations.
Location, dry – Location not normally subject to dampness, may include a location subject to temporary dampness, i.e., building under construction, provided ventilation is adequate to prevent an accumulation of moisture.
Location, wet – Location in which water or other liquid can drip, splash, or flow on or against electrical equipment.

GE LumenChoice™ Type C LED Tube and Driver System

Lamp Performance-LumenChoice™ Drivers (Limited Availability - Rolling Transition)

2'-4' Glass and LumenChoice Driver

	4ft Glass			Driver	Low Watt LumenChoice Driver			21378 - LED/DR/D2L/LW 21379 - LED/DR/D4L/LW		
Lamp Product Code	Lamp Description	CCT	DLC*	Wattage	8W	9W	12W	15W	16.5W	Notes
34211	LEDT8/LC/G/4/830	3000K	Yes	Initial Lumens	1050	1150	1550	1900	2000	
34227	LEDT8/LC/G/4/835	3500K	Yes		1050	1200	1600	1950	2050	
34235	LEDT8/LC/G/4/840	4000K	Yes		1050	1200	1600	1950	2050	
34239	LEDT8/LC/G/4/850	5000K	Yes		1050	1200	1600	1950	2050	

	4ft Glass			Driver	High Watt LumenChoice Driver			21383 - LED/DR/D2L/HW 21392 - LED/DR/D4L/HW	*4L driver Max Setting at 21W per lamps	
Lamp Product Code	Lamp Description	CCT	DLC*	Wattage	18W	19.5W	21W	23W*	25W*	Notes
34211	LEDT8/LC/G/4/830	3000K	Yes	Initial Lumens	2250	2500	2650	2850	2950	
34227	LEDT8/LC/G/4/835	3500K	Yes		2300	2550	2700	2900	3000	
34235	LEDT8/LC/G/4/840	4000K	Yes		2300	2550	2700	2900	3000	
34239	LEDT8/LC/G/4/850	5000K	Yes		2300	2550	2700	2900	3000	

	4ft US Glass			Driver	Low Watt LumenChoice Driver			21378 - LED/DR/D2L/LW 21379 - LED/DR/D4L/LW	
Lamp Product Code	Lamp Description	CCT		Wattage	8W	9W	12W	15W	16.5W
36385	LEDT8LC/G4/830US	3000K	-	Initial Lumens	1050	1150	1550	1900	2000
36386	LEDT8LC/G4/835US	3500K	-		1050	1200	1600	1950	2050
36389	LEDT8LC/G4/840US	4000K	-		1050	1200	1600	1950	2050
36390	LEDT8LC/G4/850US	5000K	-		1050	1200	1600	1950	2050

	4ft US Glass			Driver	High Watt LumenChoice Driver			21383 - LED/DR/D2L/HW 21392 - LED/DR/D4L/HW	*4L driver Max Setting at 21W per lamps
Lamp Product Code	Lamp Description	CCT		Wattage	18W	19.5W	21W	23W*	25W*
36385	LEDT8LC/G4/830US	3000K	-	Initial Lumens	2250	2500	2650	2850	2950
36386	LEDT8LC/G4/835US	3500K	-		2300	2550	2700	2900	3000
36389	LEDT8LC/G4/840US	4000K	-		2300	2550	2700	2900	3000
36390	LEDT8LC/G4/850US	5000K	-		2300	2550	2700	2900	3000

	3ft Glass			Driver	Low Watt LumenChoice Driver			21378 - LED/DR/D2L/LW 21379 - LED/DR/D4L/LW	
Lamp Product Code	Lamp Description	CCT		Wattage	8W	9W	12W	15W	16.5W
36394	LEDT8/LC/G/3/830	3000K	-	Initial Lumens	1050	1150	1550	1900	2050
36395	LEDT8/LC/G/3/835	3500K	-		1050	1200	1600	1950	2100
36398	LEDT8/LC/G/3/840	4000K	-		1050	1200	1600	1950	2100
36401	LEDT8/LC/G/3/850	5000K	-		1050	1200	1600	1950	2100

	2ft Glass			Driver	Low Watt LumenChoice Driver			21378 - LED/DR/D2L/LW 21379 - LED/DR/D4L/LW
Lamp Product Code	Lamp Description	CCT		Wattage	8W	9W	12W	
36406	LEDT8/LC/G/2/830	3000K	-	Initial Lumens	1000	1100	1450	
36408	LEDT8/LC/G/2/835	3500K	-		1050	1200	1550	
36409	LEDT8/LC/G/2/840	4000K	-		1050	1200	1550	
36413	LEDT8/LC/G/2/850	5000K	-		1050	1200	1550	

Updated / New Product

Information provided is subject to change without notice. Please verify all details with GE. All values are design or typical values when measured under laboratory conditions, and GE makes no warranty or guarantee, expressed or implied, that such performance will be obtained under end-use conditions.

* The life rating is based on the hours of operation the lamp will provide before reaching 70% of its original rating (L70)

UL 1993 Environmental Requirements for LED LAMPS

Location, damp – Exterior or interior location that is normally or periodically subject to condensation of moisture in, on, or adjacent to, electrical equipment, and includes partially protected locations.

Location, dry – Location not normally subject to dampness, may include a location subject to temporary dampness, i.e., building under construction, provided ventilation is adequate to prevent an accumulation of moisture.

Location, wet – Location in which water or other liquid can drip, splash, or flow on or against electrical equipment.

GE LumenChoice™ Type C LED Tube and Driver System

Lamp Performance-LumenChoice™ Drivers (Limited Availability - Rolling Transition)

2'-4' Plastic and LumenChoice Driver

	4ft Plastic			Driver	Low Watt LumenChoice Driver			21378 - LED/DR/D2L/LW 21379 - LED/DR/D4L/LW		
Lamp Product Code	Lamp Description	CCT	DLC*	Wattage	8W	9W	12W	15W	16.5W	Notes
34248	LEDT8/LC/4/830	3000K	-		1000	1100	1500	1850	1950	
34249	LEDT8/LC/4/835	3500K	-		1000	1150	1550	1900	2000	
34250	LEDT8/LC/4/840	4000K	-	Initial Lumens	1000	1150	1550	1900	2000	
34253	LEDT8/LC/4/850	5000K	-		1000	1150	1550	1900	2000	
34262	LEDT8/LC/4/865	6500K	-		950	1100	1500	1800	1900	

	4ft Plastic			Driver	High Watt LumenChoice Driver			21383 - LED/DR/D2L/HW 21392 - LED/DR/D4L/HW	*4L driver Max Setting at 21W per lamps
Lamp Product Code	Lamp Description	CCT		Wattage	18W	19.5W	21W	23W*	25W*
34248	LEDT8/LC/4/830	3000K	-		2200	2450	2600	2800	2950
34249	LEDT8/LC/4/835	3500K	-		2250	2500	2650	2850	3000
34250	LEDT8/LC/4/840	4000K	-	Initial Lumens	2250	2500	2650	2850	3000
34253	LEDT8/LC/4/850	5000K	-		2250	2500	2650	2850	3000
34262	LEDT8/LC/4/865	6500K	-		2100	2350	2500	2700	2850

	3ft Plastic			Driver	Low Watt LumenChoice Driver			21378 - LED/DR/D2L/LW 21379 - LED/DR/D4L/LW	
Lamp Product Code	Lamp Description	CCT		Wattage	8W	9W	12W	15W	16.5W
36416	LEDT8/LC/3/830	3000K	-		1000	1100	1500	1850	2000
36419	LEDT8/LC/3/835	3500K	-		1000	1150	1550	1900	2050
36420	LEDT8/LC/3/840	4000K	-	Initial Lumens	1000	1150	1550	1900	2050
36435	LEDT8/LC/3/850	5000K	-		1000	1150	1550	1900	2050
36436	LEDT8/LC/3/865	6500K	-		950	1100	1500	1800	1950

	2ft Plastic			Driver	Low Watt LumenChoice Driver		21378 - LED/DR/D2L/LW 21379 - LED/DR/D4L/LW
Lamp Product Code	Lamp Description	CCT		Wattage	8W	9W	12W
36437	LEDT8/LC/2/830	3000K	-		1050	1150	1500
36439	LEDT8/LC/2/835	3500K	-		1100	1250	1600
36440	LEDT8/LC/2/840	4000K	-	Initial Lumens	1100	1250	1600
36453	LEDT8/LC/2/850	5000K	-		1100	1250	1600
36459	LEDT8/LC/2/865	6500K	-		1100	1250	1600

GE LumenChoice™ Type C LED Tube and Driver System with reveal TriGain™ Technology

Lamp Performance-Regular Drivers

2'-4' Glass and Regular Driver

	4ft Glass			Driver	LED12T8/DR/XX	LED15T8/DR/XX	LED18T8/DR/XX	
Lamp Product Code	Lamp Description	CCT	DLC*	Wattage	12W	15W	18W	Notes
34271	LEDT8/LC/G/4/935	3500K	-		1650	1950	2350	MTO, 12 Weeks
34273	LEDT8/LC/G/4/940	4000K	-	Initial Lumens	1700	2000	2400	MTO, 12 Weeks
34276	LEDT8/LC/G/4/950	5000K	-		1700	2050	2450	MTO, 12 Weeks

	3ft Glass			Driver	LED12T8/DR/XX	LED15T8/DR/XX	
Lamp Product Code	Lamp Description	CCT		Wattage	12W	15W	
36338	LEDT8/LC/G/3/935	3500K	-		1600	1850	MTO, 12 Weeks
36355	LEDT8/LC/G/3/940	4000K	-	Initial Lumens	1650	1900	MTO, 12 Weeks
36362	LEDT8/LC/G/3/950	5000K	-		1700	1900	MTO, 12 Weeks

	2ft Glass			Driver	LED9T8/DR/XX	
Lamp Product Code	Lamp Description	CCT		Wattage	9W	
36371	LEDT8/LC/G/2/935	3500K	-		1000	MTO, 12 Weeks
36378	LEDT8/LC/G/2/940	4000K	-	Initial Lumens	1100	MTO, 12 Weeks
36383	LEDT8/LC/G/2/950	5000K	-		1100	MTO, 12 Weeks

Lamp Performance-LumenChoice™ Drivers

2'-4' Glass and LumenChoice Driver

	4ft Glass			Driver	Low Watt LumenChoice Driver			21378 - LED/DR/D2L/LW 21379 - LED/DR/D4L/LW		
Lamp Product Code	Lamp Description	CCT	DLC*	Wattage	8W	9W	12W	15W	16.5W	Notes
34271	LEDT8/LC/G/4/935	3500K	-		1050	1200	1650	1950	2100	MTO, 12 Weeks
34273	LEDT8/LC/G/4/940	4000K	-	Initial Lumens	1100	1250	1700	2000	2150	MTO, 12 Weeks
34276	LEDT8/LC/G/4/950	5000K	-		1100	1250	1700	2050	2250	MTO, 12 Weeks

Updated / New Product

Information provided is subject to change without notice. Please verify all details with GE. All values are design or typical values when measured under laboratory conditions, and GE makes no warranty or guarantee, expressed or implied, that such performance will be obtained under end-use conditions.

* The life rating is based on the hours of operation the lamp will provide before reaching 70% of its original rating (L70)

UL 1993 Environmental Requirements for LED LAMPS

Location, damp – Exterior or interior location that is normally or periodically subject to condensation of moisture in, on, or adjacent to, electrical equipment, and includes partially protected locations.

Location, dry – Location not normally subject to dampness, may include a location subject to temporary dampness, i.e., building under construction, provided ventilation is adequate to prevent an accumulation of moisture.

Location, wet – Location in which water or other liquid can drip, splash, or flow on or against electrical equipment.

GE LumenChoice™ Type C LED Tube and Driver System

Lamp Performance-Regular Drivers

2'-4' T5 HO and Regular Driver

	4ft Glass			Driver			LED18T8/DR/XX	LED21T8/DR/XX	LED36T8/DR/XX	
Lamp Product Code	Lamp Description	CCT	DLC*	Wattage			18W	21W	36W	Notes
38926	LEDT5/LC/G/4/830	3000K	-	Initial Lumens			2100	2500	4300	Avaialble Q3 2019
38934	LEDT5/LC/G/4/835	3500K	-				2150	2500	4350	Avaialble Q3 2019
38940	LEDT5/LC/G/4/840	4000K	-				2200	2550	4400	Avaialble Q3 2019
38946	LEDT5/LC/G/4/850	5000K	-				2200	2550	4400	Avaialble Q3 2019
	3ft Glass			Driver			LED15T8/DR/XX	LED18T8/DR/XX	LED21T8/DR/XX	
Lamp Product Code	Lamp Description	CCT		Wattage			15W	18W	21W	
38947	LEDT5/LC/G/3/830	3000K	-	Initial Lumens			1750	2100	2500	Avaialble Q3 2019
38948	LEDT5/LC/G/3/835	3500K	-				1800	2150	2550	Avaialble Q3 2019
38949	LEDT5/LC/G/3/840	4000K	-				1850	2200	2600	Avaialble Q3 2019
38955	LEDT5/LC/G/3/850	5000K	-				1850	2200	2600	Avaialble Q3 2019
	2ft Glass			Driver	LED9T8/DR/XX	LED12T8/DR/XX	LED15T8/DR/XX	LED18T8/DR/XX		
Lamp Product Code	Lamp Description	CCT		Wattage	9W	12W	15W	18W		
38968	LEDT5/LC/G/2/830	3000K	-	Initial Lumens	1050	1400	1800	2150		Avaialble Q3 2019
38980	LEDT5/LC/G/2/835	3500K	-		1100	1450	1850	2200		Avaialble Q3 2019
38983	LEDT5/LC/G/2/840	4000K	-		1150	1500	1900	2250		Avaialble Q3 2019
38992	LEDT5/LC/G/2/850	5000K	-		1150	1500	1900	2250		Avaialble Q3 2019

2'-4' T5 HE and Regular Driver

	4ft Glass			Driver		LED12T8/DR/XX	LED15T8/DR/XX	LED18T8/DR/XX	LED21T8/DR/XX	
Lamp Product Code	Lamp Description	CCT	DLC*	Wattage		12W	15W	18W	21W	Notes
38993	LEDT5LC/G4/830HE	3000K	-	Initial Lumens		1500	1900	2250	2650	Avaialble Q3 2019
38995	LEDT5LC/G4/835HE	3500K	-			1500	1950	2300	2700	Avaialble Q3 2019
38998	LEDT5LC/G4/840HE	4000K	-			1550	2000	2350	2750	Avaialble Q3 2019
38999	LEDT5LC/G4/850HE	5000K	-			1550	2000	2350	2750	Avaialble Q3 2019
	3ft Glass			Driver	LED9T8/DR/XX	LED12T8/DR/XX	LED15T8/DR/XX			
Lamp Product Code	Lamp Description	CCT		Wattage	9W	12W	15W			
39000	LEDT5LC/G3/830HE	3000K	-	Initial Lumens	1100	1500	1850			Avaialble Q3 2019
39001	LEDT5LC/G3/835HE	3500K	-		1150	1550	1900			Avaialble Q3 2019
39002	LEDT5LC/G3/840HE	4000K	-		1150	1600	1950			Avaialble Q3 2019
39003	LEDT5LC/G3/850HE	5000K	-		1150	1600	1950			Avaialble Q3 2019
	2ft Glass			Driver	LED9T8/DR/XX	LED12T8/DR/XX	LED15T8/DR/XX			
Lamp Product Code	Lamp Description	CCT		Wattage	9W	12W	15W			
39004	LEDT5LC/G2/830HE	3000K	-	Initial Lumens	1100	1450	1800			Avaialble Q3 2019
39005	LEDT5LC/G2/835HE	3500K	-		1150	1500	1850			Avaialble Q3 2019
39006	LEDT5LC/G2/840HE	4000K	-		1200	1550	1900			Avaialble Q3 2019
39016	LEDT5LC/G2/850HE	5000K	-		1200	1550	1900			Avaialble Q3 2019

Updated / New Product

Information provided is subject to change without notice. Please verify all details with GE. All values are design or typical values when measured under laboratory conditions, and GE makes no warranty or guarantee, expressed or implied, that such performance will be obtained under end-use conditions.

* The life rating is based on the hours of operation the lamp will provide before reaching 70% of its original rating (L70)

UL 1993 Environmental Requirements for LED LAMPS

Location, damp – Exterior or interior location that is normally or periodically subject to condensation of moisture in, on, or adjacent to, electrical equipment, and includes partially protected locations.

Location, dry – Location not normally subject to dampness, may include a location subject to temporary dampness, i.e., building under construction, provided ventilation is adequate to prevent an accumulation of moisture.

Location, wet – Location in which water or other liquid can drip, splash, or flow on or against electrical equipment.

GE LumenChoice™ Type C LED Tube and Driver System

Lamp Performance-LumenChoice™ Drivers (Limited Availability - Rolling Transition)

2'-4' T5 HO and LumenChoice Driver

	4ft Glass			Driver	High Watt LumenChoice Driver			21383 - LED/DR/D2L/HW 21392 - LED/DR/D4L/HW		
Lamp Product Code	Lamp Description	CCT	DLC*	Wattage	18W	19.5W	21W	23W	25W	Notes
38926	LEDT5/LC/G/4/830	3000K	-	Initial Lumens	2100	2250	2500	2700	2950	Avaialble Q3 2019
38934	LEDT5/LC/G/4/835	3500K	-		2150	2300	2500	2750	3000	Avaialble Q3 2019
38940	LEDT5/LC/G/4/840	4000K	-		2200	2350	2550	2800	3050	Avaialble Q3 2019
38946	LEDT5/LC/G/4/850	5000K	-		2200	2350	2550	2800	3050	Avaialble Q3 2019
	3ft Glass			Driver	High Watt LumenChoice Driver			21383 - LED/DR/D2L/HW 21392 - LED/DR/D4L/HW		
Lamp Product Code	Lamp Description	CCT	DLC*	Wattage	18W	19.5W	21W	23W	25W	Notes
38947	LEDT5/LC/G/3/830	3000K	-	Initial Lumens	2100	2300	2500	2700	2950	Avaialble Q3 2019
38948	LEDT5/LC/G/3/835	3500K	-		2150	2350	2550	2750	3000	Avaialble Q3 2019
38949	LEDT5/LC/G/3/840	4000K	-		2200	2400	2600	2800	3050	Avaialble Q3 2019
38955	LEDT5/LC/G/3/850	5000K	-		2200	2400	2600	2800	3050	Avaialble Q3 2019
	2ft Glass			Driver	Low Watt LumenChoice Driver			21378 - LED/DR/D2L/LW 21379 - LED/DR/D4L/LW		
Lamp Product Code	Lamp Description	CCT		Wattage	8W	9W	12W	15W	16.5W	
38968	LEDT5/LC/G/2/830	3000K	-	Initial Lumens	950	1050	1400	1800	1950	Avaialble Q3 2019
38980	LEDT5/LC/G/2/835	3500K	-		950	1100	1450	1850	2000	Avaialble Q3 2019
38983	LEDT5/LC/G/2/840	4000K	-		1000	1150	1500	1900	2050	Avaialble Q3 2019
38992	LEDT5/LC/G/2/850	5000K	-		1000	1150	1500	1900	2050	Avaialble Q3 2019

2'-4' T5 HE and LumenChoice Driver

	4ft Glass			Driver	High Watt LumenChoice Driver			21383 - LED/DR/D2L/HW 21392 - LED/DR/D4L/HW		
Lamp Product Code	Lamp Description	CCT	DLC*	Wattage	18W	19.5W	21W	23W	25W	Notes
38993	LEDT5LC/G4/830HE	3000K	-	Initial Lumens	2250	2450	2650	2900	3150	Avaialble Q3 2019
38995	LEDT5LC/G4/835HE	3500K	-		2300	2500	2700	2950	3200	Avaialble Q3 2019
38998	LEDT5LC/G4/840HE	4000K	-		2350	2550	2750	3000	3250	Avaialble Q3 2019
38999	LEDT5LC/G4/850HE	5000K	-		2350	2550	2750	3000	3250	Avaialble Q3 2019
	4ft Glass			Driver	Low Watt LumenChoice Driver			21378 - LED/DR/D2L/LW 21379 - LED/DR/D4L/LW		
Lamp Product Code	Lamp Description	CCT	DLC*	Wattage	8W	9W	12W	15W	16.5W	Notes
38993	LEDT5LC/G4/830HE	3000K	-	Initial Lumens	1000	1100	1500	1900	2050	Avaialble Q3 2019
38995	LEDT5LC/G4/835HE	3500K	-		1000	1150	1500	1950	2100	Avaialble Q3 2019
38998	LEDT5LC/G4/840HE	4000K	-		1050	1200	1550	2000	2150	Avaialble Q3 2019
38999	LEDT5LC/G4/850HE	5000K	-		1050	1200	1550	2000	2150	Avaialble Q3 2019
	3ft Glass			Driver	High Watt LumenChoice Driver			21378 - LED/DR/D2L/LW 21379 - LED/DR/D4L/LW		
Lamp Product Code	Lamp Description	CCT	DLC*	Wattage	8W	9W	12W	15W	16.5W	Notes
39000	LEDT5LC/G3/830HE	3000K	-	Initial Lumens	950	1100	1500	1850	2050	Avaialble Q3 2019
39001	LEDT5LC/G3/835HE	3500K	-		1000	1150	1550	1900	2100	Avaialble Q3 2019
39002	LEDT5LC/G3/840HE	4000K	-		1050	1150	1600	1950	2150	Avaialble Q3 2019
39003	LEDT5LC/G3/850HE	5000K	-		1050	1150	1600	1950	2150	Avaialble Q3 2019
	2ft Glass			Driver	Low Watt LumenChoice Driver			21378 - LED/DR/D2L/LW 21379 - LED/DR/D4L/LW		
Lamp Product Code	Lamp Description	CCT		Wattage	8W	9W	12W	15W	16.5W	
39004	LEDT5LC/G2/830HE	3000K	-	Initial Lumens	950	1100	1450	1800	2000	Avaialble Q3 2019
39005	LEDT5LC/G2/835HE	3500K	-		1000	1150	1500	1850	2050	Avaialble Q3 2019
39006	LEDT5LC/G2/840HE	4000K	-		1050	1200	1550	1900	2100	Avaialble Q3 2019
39016	LEDT5LC/G2/850HE	5000K	-		1050	1200	1550	1900	2100	Avaialble Q3 2019

Updated / New Product

Information provided is subject to change without notice. Please verify all details with GE. All values are design or typical values when measured under laboratory conditions, and GE makes no warranty or guarantee, expressed or implied, that such performance will be obtained under end-use conditions.

* The life rating is based on the hours of operation the lamp will provide before reaching 70% of its original rating (L70)

UL 1993 Environmental Requirements for LED LAMPS

Location, damp – Exterior or interior location that is normally or periodically subject to condensation of moisture in, on, or adjacent to, electrical equipment, and includes partially protected locations.

Location, dry – Location not normally subject to dampness, may include a location subject to temporary dampness, i.e., building under construction, provided ventilation is adequate to prevent an accumulation of moisture.

Location, wet – Location in which water or other liquid can drip, splash, or flow on or against electrical equipment.

LED replacement Drivers

Regular Driver Product Specifications

Type	Watts	Order Code	Description	Volts	Case Qty**	Output Current (A)	Frequency	Eff	Output	Output Voltage	Temp (Min)	Temp (Max)	Dimmable	Additional Information
Lightech Drivers - Non-Dimming														
	18	93100	LED9T8/DR/UN/2L	120-277V	10	0.27x2	50/60 Hz	>.9	DC	26-34V	-4 F	113 F	-	Maximum 2 Tubes (non potted)
	24	76289	LED12T8/DR/2L	120-277V	10	0.21x2	50/60 Hz	>.9	DC	26-34V	-4 F	113 F	-	Maximum 2 Tubes
	30	38970	LED15T8/DR/UN/2L	120-277V	10	0.44x2	50/60 Hz	>.9	DC	26-34V	-4 F	113 F	-	Maximum 2 Tubes (non potted)
	36	82347	LED18T8/DR/UN/2L	120-277V	10	0.53x2	50/60 Hz	>.9	DC	26-34V	-4 F	113 F	-	Maximum 2 Tubes (non potted)
	21	94384	LED21T8/DR/1L	120-277V	10	0.62	50/60 Hz	>.9	DC	26-34V	-4 F	113 F	-	Maximum 1 Tube
	42	94385	LED21T8/DR/2L	120-277V	10	0.62x2	50/60 Hz	>.9	DC	26-34V	-4 F	113 F	-	Maximum 2 Tubes
Lightech Drivers - Dimming														
	24	76290	LED12T8/DR/D2L	120-277V	10	0.21x2	50/60 Hz	>.9	DC	26-34V	-4 F	113 F	Yes	Maximum 2 Tubes
	48	76318	LED12T8/DR/D4L	120-277V	10	0.21x4	50/60 Hz	>.9	DC	26-34V	-4 F	113 F	Yes	Maximum 4 Tubes
	42	28174	LED14/DR/D3L	120-277V	10	0.43x3	50/60 Hz	>.9	DC	26-34V	-4 F	113 F	Yes	Maximum 3 Tubes
	30	38974	LED15T8/DR/D2L	120-277V	10	0.44x2	50/60 Hz	>.9	DC	26-34V	-4 F	113 F	Yes	Maximum 2 Tubes
	60	38975	LED15T8/DR/D4L	120-277V	10	0.44x4	50/60 Hz	>.9	DC	26-34V	-4 F	113 F	Yes	Maximum 4 Tubes
	36	88141	LED18T8/DR/D2L	120-277V	10	0.53x2	50/60 Hz	>.9	DC	26-34V	-4 F	113 F	Yes	Maximum 2 Tubes
	72	88139	LED18T8/DR/D4L	120-277V	10	0.53x4	50/60 Hz	>.9	DC	26-34V	-4 F	113 F	Yes	Maximum 4 Tubes
	42	60041	LED21T8/DR/D2L	120-277V	10	0.62x2	50/60 Hz	>.9	DC	26-34V	-4 F	113 F	Yes	Maximum 2 Tubes
	84	62030	LED21T8/DR/D4L	120-277V	10	0.62x4	50/60 Hz	>.9	DC	26-34V	-4 F	113 F	Yes	Maximum 4 Tubes
	72	63126	LED36T8/DR/D2L	120-277V	10	1.06x2	50/60 Hz	>.9	DC	26-34V	-4 F	113 F	Yes	Maximum 2 Tubes
	144	92013	LED36T/DR/D4L	120-277V	10	1.06x4	50/60 Hz	>.9	DC	26-34V	-4 F	113F	Yes	Maximum 4 Tube

LumenChoice™ Drivers Product Specifications (Limited Availability - Rolling Transition)

Type	Watts	Order Code	Description	Volts	Case Qty**	Output Current (A)	Frequency	Eff	Output	Output Voltage	Temp (Min)	Temp (Max)	Dimmable	Additional Information
Lumen Choice Drivers - Dimming														
	33	21378	LED/DR/D2L/LW	120-277V	10	0.48x2	50/60 Hz	>.9	DC	26-34V	-4 F	104 F	Yes	Max 2 Tubes: 15W per tube default setting
	66	21379	LED/DR/D4L/LW	120-277V	10	0.48x4	50/60 Hz	>.9	DC	26-34V	-4 F	104 F	Yes	Max 4 Tubes: 15W per tube default setting
	50	21383	LED/DR/D2L/HW	120-277V	10	0.72x2	50/60 Hz	>.9	DC	26-34V	-4 F	104 F	Yes	Max 2 Tubes: 21W per tube default setting
	84	21392	LED/DR/D4L/HW	120-277V	10	0.62x4	50/60 Hz	>.9	DC	26-34V	-4 F	104 F	Yes	Max 4 Tubes: 21W per tube default setting

Updated / New Product

Information provided is subject to change without notice. Please verify all details with GE. All values are design or typical values when measured under laboratory conditions, and GE makes no warranty or guarantee, expressed or implied, that such performance will be obtained under end-use conditions.

* The life rating is based on the hours of operation the lamp will provide before reaching 70% of its original rating (L70)

UL 1993 Environmental Requirements for LED LAMPS

Location, damp – Exterior or interior location that is normally or periodically subject to condensation of moisture in, on, or adjacent to, electrical equipment, and includes partially protected locations.

Location, dry – Location not normally subject to dampness, may include a location subject to temporary dampness, i.e., building under construction, provided ventilation is adequate to prevent an accumulation of moisture.

Location, wet – Location in which water or other liquid can drip, splash, or flow on or against electrical equipment.

current powered by GE

http://products.currentbyge.com.

GE and the GE Monogram are trademarks of the General Electric Company. All other trademarks are the property of their respective owners. Information provided is subject to change without notice. All values are design or typical values when measured under laboratory conditions. GE Lighting and GE Lighting Solutions, LLC are businesses of the General Electric Company. © 2019 GE.

LEDL061 (Rev 03/27/19)

KT-LED36HID-E26-840-D

HID REPLACEMENT LED LAMP

DESCRIPTION

36W HID Replacement LED Lamp | 4000K | >83 CRI | IP64 Rated

LAMP TYPE:	HID Replacement LED
BASE TYPE:	E26 (Medium)
WATTAGE:	36W
COLOR TEMPERATURE:	4000K
METAL HALIDE EQUIVALENT:	150W
COLOR RENDERING INDEX (CRI):	>83
WARRANTY:	5 Years

PRODUCT FEATURES

- Replacement for Conventional Metal Halide Lamp
- Non-Dimmable; Do Not Dim
- 50,000+ Hour Lifetime
- Environmentally Friendly: No Mercury Used
- Instant Startup
- UL Listed
- Operating Temperature: -29ºC/-20ºF to 60ºC/140ºF
- Integral Driver, Eliminates the Need for External Driver or Ballast; Includes 4kV Surge Protection
- IP64 Rated; Integrated Heat Sink Quickly Dissipates Heat and Guides Water Intrusion Out of the Lamp
- Suitable for Use in Fully Enclosed Fixture

OPERATING SPECIFICATIONS

ELECTRICAL CHARACTERISTICS

Input Voltage	Power Consumption	Power Factor	Input Current
120-277Vac	36W	>0.9	0.32A @ 120V 0.14A @ 277V

RATED LIFE

L70 (Hours)	50,000

PHOTOMETRIC CHARACTERISTICS

Color Temperature (CCT)	4000K
Luminous Flux	5040 lm
Color Rendering Index (CRI)	>83
Efficacy	140 lm/W
Visible Light Area	360°

SPECTRAL DISTRIBUTION

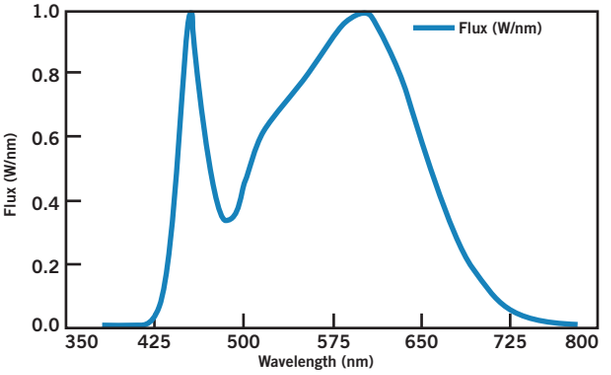

LUX DISTANCE CURVE

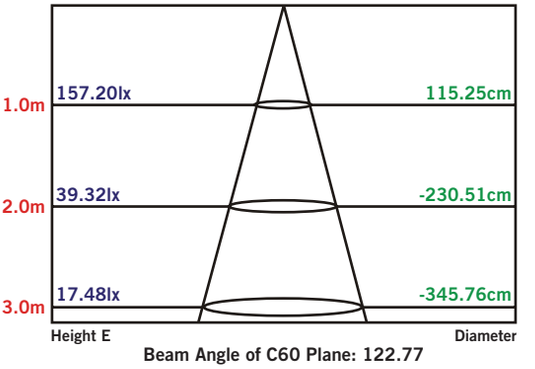

Keystone Technologies • 1390 Welsh Road, North Wales, PA 19454 • Phone (800) 464-2680 • Fax (888) 966-0556 • **www.keystonetech.com**

KT-LED36HID-E26-840-D

HID REPLACEMENT LED LAMP

WIRING DIAGRAM

STEP 1
Disconnect power. Disconnect and remove existing ballast, capacitor, and/or ignitor (where applicable) from fixture.

STEP 2
Rewire for line voltage to the lamp socket.

STEP 3
Install new LED replacement lamp. Ensure lamp is operating properly when power is turned on.

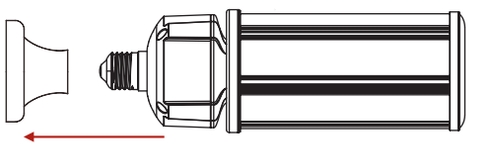

FIGURE 1

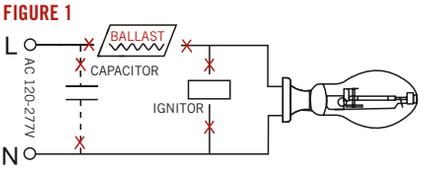

FIGURE 2

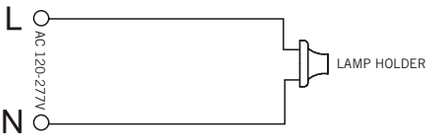

FIGURE 3

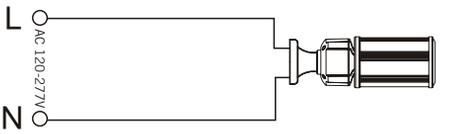

PHYSICAL CHARACTERISTICS

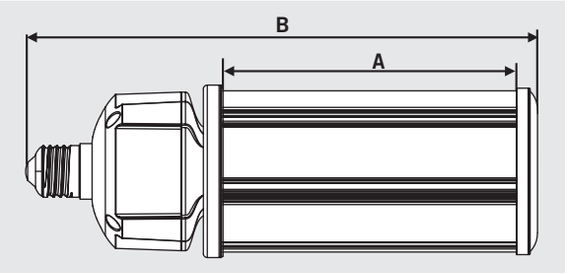

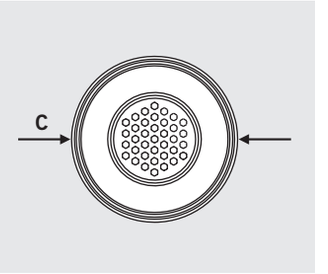

LAMP DIMENSIONS

A (Illuminated Length)	4.65”
B (Body Length)	8.98”
C (Diameter)	3.43”

BASE TYPE: E26 (Medium)

ORDERING INFORMATION

ORDER CODE	PACKAGING STYLE	PACK QTY.	ITEM STATUS
KT-LED36HID-E26-840-D-DP	Distributor Pack (Individual Cartons)	16	Quick Ship

CATALOG NUMBER BREAKDOWN

KT-LED36HID-E26-840-D-DP

KT	LED	36	HID	E26	840	D	DP
Keystone Technologies	LED Lamp	Wattage	Lamp Type	Base Type	800 Series	Color Temp.	Direct Drive Series	Packaging Style

KT-LED45HID-E26-840-D

HID REPLACEMENT LED LAMP

DESCRIPTION

45W HID Replacement LED Lamp | 4000K | >83 CRI | IP64 Rated

LAMP TYPE:	HID Replacement LED
BASE TYPE:	E26 (Medium)
WATTAGE:	45W
COLOR TEMPERATURE:	4000K
METAL HALIDE EQUIVALENT:	175W
COLOR RENDERING INDEX (CRI):	>83
WARRANTY:	5 Years

PRODUCT FEATURES

- Replacement for Conventional Metal Halide Lamp
- Non-Dimmable; Do Not Dim
- 50,000+ Hour Lifetime
- Environmentally Friendly: No Mercury Used
- Instant Startup
- UL Listed
- Operating Temperature: -29ºC/-20ºF to 60ºC/140ºF
- Integral Driver, Eliminates the Need for External Driver or Ballast; Includes 4kV Surge Protection
- IP64 Rated; Integrated Heat Sink Quickly Dissipates Heat and Guides Water Intrusion Out of the Lamp
- Suitable for Use in Fully Enclosed Fixture

OPERATING SPECIFICATIONS

ELECTRICAL CHARACTERISTICS

Input Voltage	Power Consumption	Power Factor	Input Current
120-277Vac	45W	>0.9	0.42A @ 120V 0.18A @ 277V

RATED LIFE

L70 (Hours)	50,000

PHOTOMETRIC CHARACTERISTICS

Color Temperature (CCT)	4000K
Luminous Flux	6300 lm
Color Rendering Index (CRI)	>83
Efficacy	140 lm/W
Visible Light Area	360°

SPECTRAL DISTRIBUTION

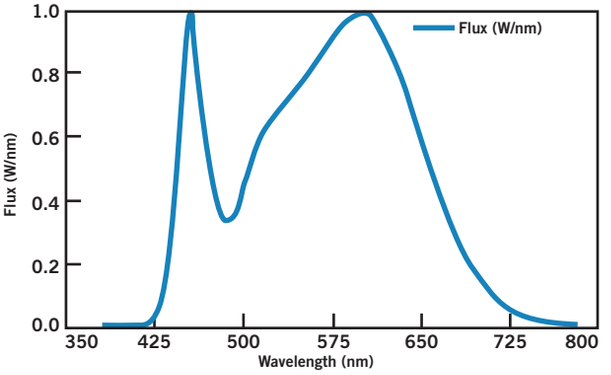

LUX DISTANCE CURVE

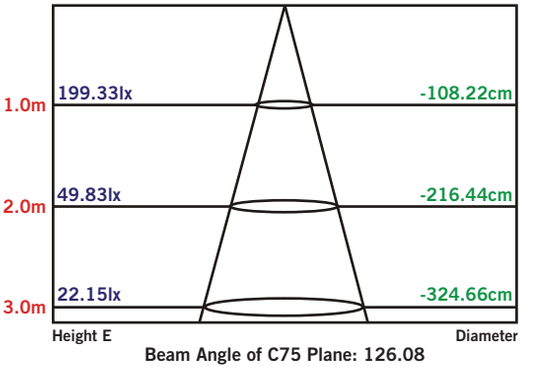

Keystone Technologies • 1390 Welsh Road, North Wales, PA 19454 • Phone (800) 464-2680 • Fax (888) 966-0556 • **www.keystonetech.com**

KT-LED45HID-E26-840-D

HID REPLACEMENT LED LAMP

WIRING DIAGRAM

STEP 1
Disconnect power. Disconnect and remove existing ballast, capacitor, and/or ignitor (where applicable) from fixture.

STEP 2
Rewire for line voltage to the lamp socket.

STEP 3
Install new LED replacement lamp. Ensure lamp is operating properly when power is turned on.

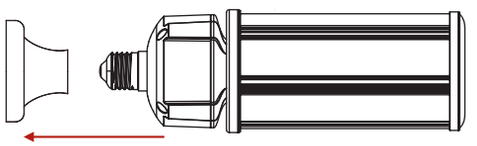

FIGURE 1

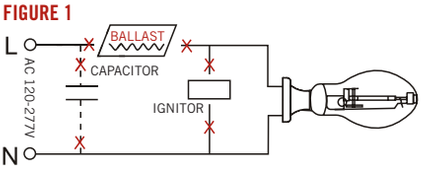

FIGURE 2

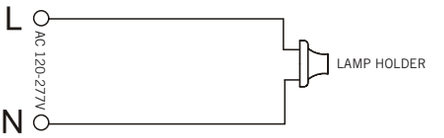

FIGURE 3

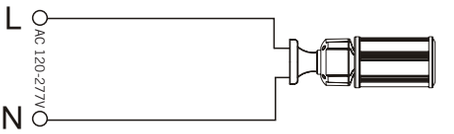

PHYSICAL CHARACTERISTICS

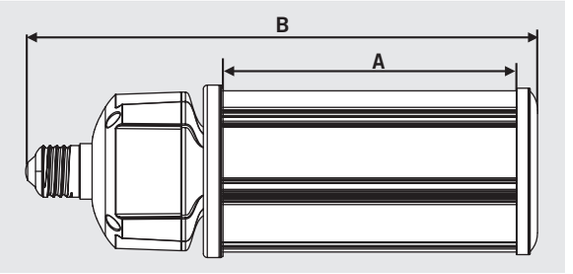

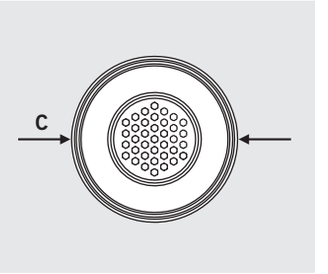

LAMP DIMENSIONS

A (Illuminated Length)	5.83”
B (Body Length)	10.16”
C (Diameter)	3.43”

BASE TYPE: E26 (Medium)

ORDERING INFORMATION

ORDER CODE	PACKAGING STYLE	PACK QTY.	ITEM STATUS
KT-LED45HID-E26-840-D-DP	Distributor Pack (Individual Cartons)	16	Quick Ship

CATALOG NUMBER BREAKDOWN

KT-LED45HID-E26-840-D-DP

KT	LED	45	HID	E26	840	D	DP
Keystone Technologies	LED Lamp	Wattage	Lamp Type	Base Type	800 Series	Color Temp.	Direct Drive Series	Packaging Style

LED Paddle Retrofit Kits Specification

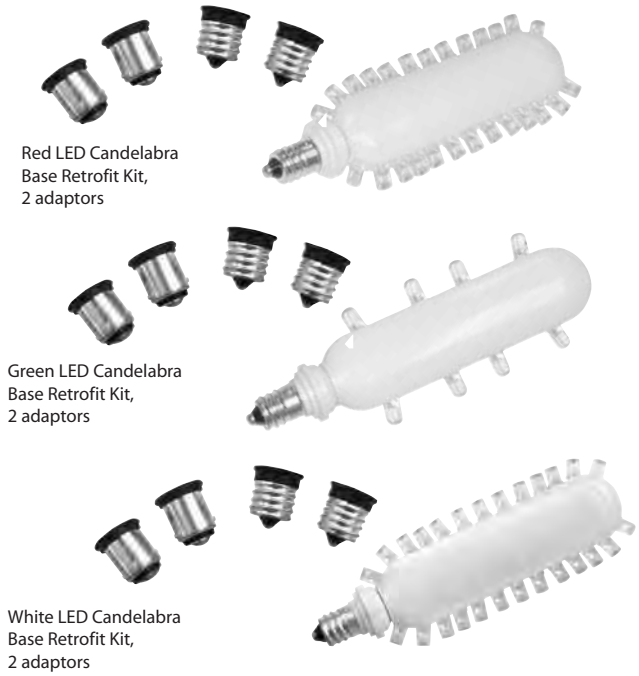

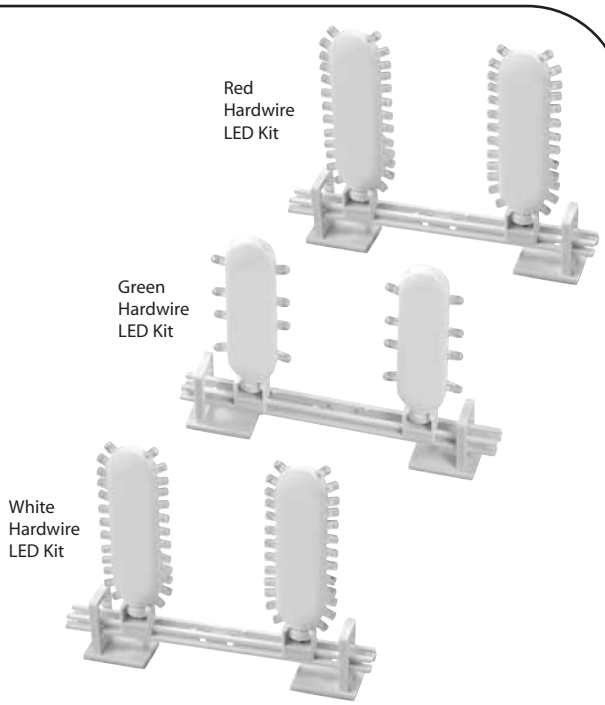

Features

- New, brighter LEDs
- Solid construction, made to retrofit into existing exit signs
- More compact design allows unit to fit into more applications
- Available with white, green or red LEDs
- Zero maintenance & easy installation
- Excellent energy efficiency!
- ETL Listed, conforms to UL924
- 20715, 20716, 20717 & 20718 CUL Listed.
- Innovative concave LED design directs light output where you need it the most in existing exit signs!
- Hardwire version is both 120V and 277V and comes complete with mounting bracket
- LED Lamp Dimensions 4.75" x 1.65" x 0.6"
- Life expectancy 10 years at full lumen output

Ordering Information:

Catalog Model #	Description	M.O.L. (Inches)	Width (Inches)	Depth (Inches)	Input Voltage	Watts per lamp
20715	Red LED Candelabra Base Retrofit Kit, 2 Adapt.	4.75"	1.65"	.60"	120V	1.2W
20716	Red Hardwire LED Kit 120 / 277V	5.63"	6.9"	1.0"	120 / 277V	1.2W
20717	Green LED Candelabra Base Retrofit Kit, 2 Adapt.	4.75"	1.65"	.60"	120V	0.7W
20718	Green Hardwire LED Kit 120 / 277V	5.63"	6.9"	1.0"	120 / 277V	0.7W
20719	White LED Candelabra Base Retrofit Kit, 2 Adapt.	4.70"	1.65"	.60"	120V	1.7W
20721	White Hardwire LED Kit 120 / 277V	4.75"	6.9"	1.0"	120 / 277V	1.8W

TCP, Inc.
325 Campus Drive | Aurora, Ohio 44202 | P: 800-324-1496 | F: 330-995-6188 | tcpi.com
©TCP, Inc. 2009/40999

LED PAR Lamps

DIMMABLE • WET LOCATION • 25,000 HOURS

TCP's award winning PAR lamps combine traditional beauty with top-notch technology. With the wide variety of options available—you can be sure to find the PAR lamps to meet your needs.

LIMITLESS OPTIONS FOR THE FOLLOWING APPLICATIONS

- Track lights
- Recessed downlights
- Display lights
- Flood and spotlighting
- Outdoor fixtures that protect lamps from the elements

FEATURES	BENEFITS
Up to 85% less energy than halogen alternatives	Instant energy savings
Long life	Minimizes replacement and maintenance costs
Unique full face optics	Provides designer grade light quality with same look as halogen replacements
Very low heat generation	Perfect for sensitive display lighting such as art galleries
Excellent color consistency and CRI	Enhances colors of focal point while maintaining uniformity throughout lighting installation from lamp to lamp
Light weight	Track or downlight installations are not strained by excess weight
UL approved for wet location	Suitable for wet locations—when exposed to water use only with device base up
Smooth clean outside housing	Seamlessly blends into lighting applications
Durable plastic	Lowers the risk for injury or breakage

SPECIFICATIONS

Color Temperatures.....2400K, 2700K, 3000K, 3500K, 4100K, 5000K
Wattage Replacements..... 50W, 60W, 75W, 90W, 120W, 150W
Input Line Voltage .....120 VAC
Input Line Frequency..... 50/60HZ
Lamp Life (Rated) .....25,000 hours
Minimum Starting Temp .....-30C
Maximum Operating Temp.....45°C
CRI.....80

c UL us LISTED

5 YEAR WARRANTY
* Based on 12 hours use per day

WET LOCATION

Approved for enclosed fixtures however completely sealed fixture applications (ex: in ground landscape fixtures) may reduce life.

ENERGY STAR PARTNER

TCP®
325 Campus Dr. | Aurora, Ohio 44202 | P: 800-324-1496 | tcpi.com

LED PAR Lamps

DIMMABLE • WET LOCATION • 25,000 HOURS

LED PAR20 50W Equivalent Options

7W PAR20 • Dimmable • 25,000 Hours • 3.5″ (MOL) x 2.5″ (DIA)

ITEM #	DESCRIPTION	WATTS	LUMENS	LPW	COLOR	CRI	MEASURED CBCP	BEAM ANGLE
LED8P20D24KFL	LED 7W P20 DIM 24KFL	7	550	78.6	2400K	80	—	40°
LED8P20D24KNFL	LED 7W P20 DIM 24KNFL	7	550	78.6	2400K	80	—	25°
LED8P20D27KFL	LED 7W P20 DIM 27KFL	7	600	85.7	2700K	80	1208	40°
LED8P20D27KFLB	LED 7W P20 DIM 27KFL BLACK	7	600	85.7	2700K	80	1208	40°
LED8P20D27KNFL	LED 7W P20 DIM 27KNFL	7	600	85.7	2700K	80	2030	25°
LED8P20D27KNFL	LED 7W P20 DIM 27KNFL BLACK	7	600	85.7	2700K	80	2030	25°
LED8P20D27KSP	LED 7W P20 DIM 27KSP	7	600	85.7	2700K	80	4898	15°
LED8P20D30KFL	LED 7W P20 DIM 30KFL	7	625	89.3	3000K	80	1187	40°
LED8P20D30KFLB	LED 7W P20 DIM 30KFL BLACK	7	625	89.3	3000K	80	1187	40°
LED8P20D30KNFL	LED 7W P20 DIM 30KNFL	7	625	89.3	3000K	80	2050	25°
LED8P20D30KNFLB	LED 7W P20 DIM 30KNFL BLACK	7	625	89.3	3000K	80	2050	25°
LED8P20D30KSP	LED 7W P20 DIM 30KSP	7	625	89.3	3000K	80	5391	15°
LED8P20D35KFL	LED 7W P20 DIM 35KFL	7	675	96.4	3500K	80	1722	40°
LED8P20D35KNFL	LED 7W P20 DIM 35KNFL	7	675	96.4	3500K	80	4807	25°
LED8P20D41KFL	LED 7W P20 DIM 41KFL	7	675	96.4	4100K	80	1383	40°
LED8P20D41KFLB	LED 7W P20 DIM 41KFL BLACK	7	675	96.4	4100K	80	1383	40°
LED8P20D41KNFL	LED 7W P20 DIM 41KNFL	7	675	96.4	4100K	80	2174	25°
LED8P20D41KNFLB	LED 7W P20 DIM 41KNFL BLACK	7	675	96.4	4100K	80	2174	25°
LED8P20D41KSP	LED 7W P20 DIM 41KSP	7	675	96.4	4100K	80	5411	15°
LED8P20D50KFL	LED 7W P20 DIM 50KFL	7	700	100	5000K	80	1330	40°
LED8P20D50KFLB	LED 7W P20 DIM 50KFL BLACK	7	700	100	5000K	80	1330	40°
LED8P20D50KNFL	LED 7W P20 DIM 50KNFL	7	700	100	5000K	80	2172	25°
LED8P20D50KSP	LED 7W P20 DIM 50SP	7	700	100	5000K	80	5599	15°

LED PAR30 60W Equivalent Options

10W PAR30 Short Neck • Dimmable • 25,000 Hours • 3.5″ (MOL) x 3.8″ (DIA) *PHASING OUT*

LED10P30SD27KFL	LED 10W P30 DIM 27KFL	10	720	72.0	2700K	80	1714	40°
LED10P30SD30KSP	LED 10W P30 DIM 30KSP	10	720	72.0	3000K	80	—	15°
LED10P30SD41KFL	LED 10W P30 DIM 41KFL	10	720	72.0	4100K	80	1847	40°

LED PAR30 75W Equivalent Options

10W PAR30 Short Neck • Dimmable • 25,000 Hours • 3.6″ (MOL) x 3.8″ (DIA)

LED12P30SD24KFL	LED 10W P30SN DIM 24KFL	10	800	80.0	2400K	80	1619	40°
LED12P30SD24KNFL	LED 10W P30SN DIM 24KNFL	10	800	80.0	2400K	80	—	25°
LED12P30SD24KSP	LED 10W P30SN DIM 24KSP	10	800	80.0	2400K	80	—	15°
LED12P30SD27KFL	LED 10W P30SN DIM 27KFL	10	850	85.0	2700K	80	1817	40°
LED12P30SD27KFLB	LED 10W P30SN DIM 27KFL BLACK	10	850	85.0	2700K	80	1817	40°
LED12P30SD27KNFL	LED 10W P30SN DIM 27KNFL	10	850	85.0	2700K	80	4025	25°
LED12P30SD27KNFLB	LED 10W P30SN DIM 27KNFL BLACK	10	850	85.0	2700K	80	4025	25°
LED12P30SD27KSP	LED 10W P30SN DIM 27KSP	10	850	85.0	2700K	80	8042	15°
LED12P30SD30KFL	LED 10W P30SN DIM 30KFL	10	850	85.0	3000K	80	1858	40°
LED12P30SD30KFLB	LED 10W P30SN DIM 30KFL BLACK	10	850	85.0	3000K	80	1858	40°
LED12P30SD30KNFL	LED 10W P30SN DIM 30KNFL	10	850	85.0	3000K	80	4968	25°
LED12P30SD30KNFLB	LED 10W P30SN DIM 30KNFL BLACK	10	850	85.0	3000K	80	4968	25°
LED12P30SD30KSP	LED 10W P30SN DIM 30KSP	10	850	85.0	3000K	80	8380	15°
LED12P30SD30KSPB	LED 10W P30SN DIM 30KSP BLACK	10	850	85.0	3000K	80	8380	15°
LED12P30SD35KFL	LED 10W P30SN DIM 35KFL	10	850	85.0	3500K	80	2232	40°
LED12P30SD35KFLB	LED 10W P30SN DIM 35KFL BLACK	10	850	85.0	3500K	80	2232	40°

NOTE: All items come in shipping cartons of 12.

continued next page

For the most up-to-date specs, please visit www.tcpi.com

LED PAR Lamps

DIMMABLE • WET LOCATION • 25,000 HOURS

LED PAR30 75W Equivalent Options *continued*

ITEM #	DESCRIPTION	WATTS	LUMENS	LPW	COLOR	CRI	MEASURED CBCP	BEAM ANGLE
10W PAR30 Short Neck • Dimmable • 25,000 Hours • 3.6″ (MOL) x 3.8″ (DIA)								
LED12P30SD35KNFL	LED 10W P30SN DIM 35KNFL	10	850	85.0	3500K	80	4402	25°
LED12P30SD35KNFLB	LED 10W P30SN DIM 35KNFL BLACK	10	850	85.0	3500K	80	4402	25°
LED12P30SD35KSP	LED 10W P30SN DIM 35KSP	10	850	85.0	3500K	80	—	15°
LED12P30SD41KFL	LED 10W P30SN DIM 41KFL	10	850	85.0	4100K	80	2247	40°
LED12P30SD41KFLB	LED 10W P30SN DIM 41KFL BLACK	10	850	85.0	4100K	80	2247	40°
LED12P30SD41KNFL	LED 10W P30SN DIM 41KNFL	10	850	85.0	4100K	80	4895	25°
LED12P30SD41KSP	LED 10W P30SN DIM 41KSP	10	850	85.0	4100K	80	8710	15°
LED12P30SD50KFL	LED 10W P30SN DIM 50KFL	10	850	85.0	5000K	80	2454	40°
LED12P30SD50KNFL	LED 10W P30SN DIM 50KNFL	10	850	85.0	5000K	80	5260	25°
LED12P30SD50KSP	LED 10W P30SN DIM 50KSP	10	850	85.0	5000K	80	9292	15°
10.5W PAR30 • Dimmable • 25,000 Hours • 4.6″ (MOL) x 3.8″ (DIA)								
LED12P30D24KFL	LED 10.5W P30 DIM 24KFL	10.5	800	76.2	2400K	80	—	40°
LED12P30D24KNFL	LED 10.5W P30 DIM 24KNFL	10.5	800	76.2	2400K	80	—	25°
LED12P30D24KSP	LED 10.5W P30 DIM 24KSP	10.5	800	76.2	2400K	80	—	15°
LED12P30D27KFL	LED 10.5W P30 DIM 27KFL	10.5	850	81.0	2700K	80	2202	40°
LED12P30D27KFLB	LED 10.5W P30 DIM 27KFL BLACK	10.5	850	81.0	2700K	80	2202	40°
LED12P30D27KNFL	LED 10.5W P30 DIM 27KNFL	10.5	850	81.0	2700K	80	5031	25°
LED12P30D27KNFLB	LED 10.5W P30 DIM 27KNFL BLACK	10.5	850	81.0	2700K	80	5031	25°
LED12P30D27KSP	LED 10.5W P30 DIM 27KSP	10.5	850	81.0	2700K	80	9193	15°
LED12P30D27KSPB	LED 10.5W P30 DIM 27KSP BLACK	10.5	850	81.0	2700K	80	9193	15°
LED12P30D30KFL	LED 10.5W P30 DIM 30KFL	10.5	850	81.0	3000K	80	2389	40°
LED12P30D30KFLB	LED 10.5W P30 DIM 30KFL BLACK	10.5	850	81.0	3000K	80	2389	40°
LED12P30D30KNFL	LED 10.5W P30 DIM 30KNFL	10.5	850	81.0	3000K	80	5528	25°
LED12P30D30KNFLB	LED 10.5W P30 DIM 30KNFL BLACK	10.5	850	81.0	3000K	80	5528	25°
LED12P30D30KSP	LED 10.5W P30 DIM 30KSP	10.5	850	81.0	3000K	80	9006	15°
LED12P30D30KSPB	LED 10.5W P30 DIM 30KSP BLACK	10.5	850	81.0	3000K	80	9006	15°
LED12P30D35KFL	LED 10.5W P30 DIM 35KFL	10.5	850	81.0	3500K	80	2362	40°
LED12P30D35KNFL	LED 10.5W P30 DIM 35KNFL	10.5	850	81.0	3500K	80	5029	25°
LED12P30D35KSP	LED 10.5W P30 DIM 35KSP	10.5	850	81.0	3500K	80	9735	15°
LED12P30D41KFL	LED 10.5W P30 DIM 41KFL	10.5	850	81.0	4100K	80	2561	40°
LED12P30D41KFLB	LED 10.5W P30 DIM 41KFL BLACK	10.5	850	81.0	4100K	80	2561	40°
LED12P30D41KNFL	LED 10.5W P30 DIM 41KNFL	10.5	850	81.0	4100K	80	5781	25°
LED12P30D41KNFLB	LED 10.5W P30 DIM 41KNFL BLACK	10.5	850	81.0	4100K	80	5781	25°
LED12P30D41KSP	LED 10.5W P30 DIM 41KSP	10.5	850	81.0	4100K	80	9491	15°
LED12P30D41KSPB	LED 10.5W P30 DIM 41KSP BLACK	10.5	850	81.0	4100K	80	9491	15°
LED12P30D50KFL	LED 10.5W P30 DIM 50KFL	10.5	850	81.0	5000K	80	2437	40°
LED12P30D50KFLB	LED 10.5W P30 DIM 50KFL BLACK	10.5	850	81.0	5000K	80	2437	40°
LED12P30D50KNFL	LED 10.5W P30 DIM 50KNFL	10.5	850	81.0	5000K	80	5575	25°
LED12P30D50KSP	LED 10.5W P30 DIM 50KSP	10.5	850	81.0	5000K	80	9647	15°

LED PAR30 75W Equivalent Options

13.5W PAR30 • Dimmable • 25,000 Hours • 4.6″ (MOL) x 3.8″ (DIA)								
LED14P30D24KFL	LED 13.5W P30 DIM 24KFL	13.5	1000	74.1	2400K	80	—	40°
LED14P30D24KNFL	LED 13.5W P30 DIM 24KNFL	13.5	1000	74.1	2400K	80	—	25°
LED14P30D24KNFLB	LED 13.5W P30 DIM 24KNFL BLACK	13.5	1000	74.1	2400K	80	—	25°
LED14P30D24KSP	LED 13.5W P30 DIM 24KSP	13.5	1000	74.1	2400K	80	—	15°
LED14P30D27KFL	LED 13.5W P30 DIM 27KFL	13.5	1050	77.8	2700K	80	2693	40°
LED14P30D27KFLB	LED 13.5W P30 DIM 27KFL BLACK	13.5	1050	77.8	2700K	80	2693	40°

NOTE: All items come in shipping cartons of 12.

continued next page

For the most up-to-date specs, please visit www.tcpi.com

LED PAR30 75W Equivalent Options *continued*

13.5W PAR30 • Dimmable • 25,000 Hours • 4.6″ (MOL) x 3.8″ (DIA)

ITEM #	DESCRIPTION	WATTS	LUMENS	LPW	COLOR	CRI	MEASURED CBCP	BEAM ANGLE
LED14P30D27KNFL	LED 13.5W P30 DIM 27KNFL	13.5	1050	77.8	2700K	80	5808	25°
LED14P30D27KNFLB	LED 13.5W P30 DIM 27KNFL BLACK	13.5	1050	77.8	2700K	80	5808	25°
LED14P30D27KSP	LED 13.5W P30 DIM 27KSP	13.5	1050	77.8	2700K	80	10563	15°
LED14P30D27KSPB	LED 13.5W P30 DIM 27KSP BLACK	13.5	1050	77.8	2700K	80	10563	15°
LED14P30D30KFL	LED 13.5W P30 DIM 30KFL	13.5	1050	77.8	3000K	80	2849	40°
LED14P30D30KFLB	LED 13.5W P30 DIM 30KFLB	13.5	1050	77.8	3000K	80	2849	40°
LED14P30D30KNFL	LED 13.5W P30 DIM 30KNFL	13.5	1050	77.8	3000K	80	6392	25°
LED14P30D30KNFLB	LED 13.5W P30 DIM 30KNFL BLACK	13.5	1050	77.8	3000K	80	6392	25°
LED14P30D30KSP	LED 13.5W P30 DIM 30KSP	13.5	1050	77.8	3000K	80	11181	15°
LED14P30D30KSPB	LED 13.5W P30 DIM 30KSP BLACK	13.5	1050	77.8	3000K	80	11181	15°
LED14P30D35KFL	LED 13.5W P30 DIM 35KFL	13.5	1050	77.8	3500K	80	—	40°
LED14P30D35KFLB	LED 13.5W P30 DIM 35KFL BLACK	13.5	1050	77.8	3500K	80	—	40°
LED14P30D35KNFL	LED 13.5W P30 DIM 35KNFL	13.5	1050	77.8	3500K	80	—	25°
LED14P30D35KSP	LED 13.5W P30 DIM 35KSP	13.5	1050	77.8	3500K	80	—	15°
LED14P30D41KFL	LED 13.5W P30 DIM 41KFL	13.5	1050	77.8	4100K	80	2661	40°
LED14P30D41KFLB	LED 13.5W P30 DIM 41KFL BLACK	13.5	1050	77.8	4100K	80	2661	40°
LED14P30D41KNFL	LED 13.5W P30 DIM 41KNFL	13.5	1050	77.8	4100K	80	5781	25°
LED14P30D41KNFLB	LED 13.5W P30 DIM 41KNFL BLACK	13.5	1050	77.8	4100K	80	5781	25°
LED14P30D41KSP	LED 13.5W P30 DIM 41KSP	13.5	1050	77.8	4100K	80	12465	15°
LED14P30D41KSPB	LED 13.5W P30 DIM 41KSP BLACK	13.5	1050	77.8	4100K	80	12465	15°
LED14P30D50KFL	LED 13.5W P30 DIM 50KFL	13.5	1050	77.8	5000K	80	2837	40°
LED14P30D50KFLB	LED 13.5W P30 DIM 50KFL BLACK	13.5	1050	77.8	5000K	80	2837	40°
LED14P30D50KNFL	LED 13.5W P30 DIM 50KNFL	13.5	1050	77.8	5000K	80	5875	25°
LED14P30D50KSP	LED 13.5W P30 DIM 50KSP	13.5	1050	77.8	5000K	80	12073	15°

LED PAR38 90W Equivalent Options

13.5W PAR38 • Dimmable • 25,000 Hours • 5.3″ (MOL) x 4.8″ (DIA)

LED14P38D24KFL	LED 13.5W P38 DIM 24KFL	13.5	1000	74.1	2400K	80	—	40°
LED14P38D24KNFL	LED 13.5W P38 DIM 24KNFL	13.5	1000	74.1	2400K	80	—	25°
LED14P38D24KSP	LED 13.5W P38 DIM 24KSP	13.5	1000	74.1	2400K	80	—	15°
LED14P38D27KFL	LED 13.5W P38 DIM 27KFL	13.5	1050	77.8	2700K	80	2480	40°
LED14P38D27KNFL	LED 13.5W P38 DIM 27KNFL	13.5	1050	77.8	2700K	80	7649	25°
LED14P38D27KNFLB	LED 13.5W P38 DIM 27KNFL BLACK	13.5	1050	77.8	2700K	80	7649	25°
LED14P38D27KSP	LED 13.5W P38 DIM 27KSP	13.5	1050	77.8	2700K	80	12073	15°
LED14P38D27KSPB	LED 13.5W P38 DIM 27KSP BLACK	13.5	1050	77.8	2700K	80	12073	15°
LED14P38D30KFL	LED 13.5W P38 DIM 30KFL	13.5	1050	77.8	3000K	80	2498	40°
LED14P38D30KNFL	LED 13.5W P38 DIM 30KNFL	13.5	1050	77.8	3000K	80	7606	25°
LED14P38D30KSP	LED 13.5W P38 DIM 30KSP	13.5	1050	77.8	3000K	80	11845	15°
LED14P38D30KWFL	LED 13.5W P38 DIM 30KWFL	13.5	1050	77.8	3000K	80	—	60°
LED14P38D35KFL	LED 13.5W P38 DIM 35KFL	13.5	1050	77.8	3500K	80	2736	40°
LED14P38D35KFLB	LED 13.5W P38 DIM 35KFL BLACK	13.5	1050	77.8	3500K	80	2736	40°
LED14P38D35KNFL	LED 13.5W P38 DIM 35KNFL	13.5	1050	77.8	3500K	80	—	25°
LED14P38D35KSP	LED 13.5W P38 DIM 35KSP	13.5	1050	77.8	3500K	80	12856	15°
LED14P38D41KFL	LED 13.5W P38 DIM 41KFL	13.5	1050	77.8	4100K	80	2678	40°
LED14P38D41KFLB	LED 13.5W P38 DIM 41KFL BLACK	13.5	1050	77.8	4100K	80	2678	40°
LED14P38D41KNFL	LED 13.5W P38 DIM 41KNFL	13.5	1050	77.8	4100K	80	8310	25°
LED14P38D41KSP	LED 13.5W P38 DIM 41KSP	13.5	1050	77.8	4100K	80	13535	15°
LED14P38D41KSPB	LED 13.5W P38 DIM 41KSP BLACK	13.5	1050	77.8	4100K	80	13535	15°
LED14P38D50KFL	LED 13.5W P38 DIM 50KFL	13.5	1050	77.8	5000K	80	2647	40°

NOTE: All items come in shipping cartons of 12.

continued next page

For the most up-to-date specs, please visit www.tcpi.com

LED PAR38 90W Equivalent Options *continued*

13.5W PAR38 • Dimmable • 25,000 Hours • 5.3″ (MOL) x 4.8″ (DIA)

ITEM #	DESCRIPTION	WATTS	LUMENS	LPW	COLOR	CRI	MEASURED CBCP	BEAM ANGLE
LED14P38D50KFLB	LED 13.5W P38 DIM 50KFL BLACK	13.5	1050	77.8	5000K	80	2647	40°
LED14P38D50KNFL	LED 13.5W P38 DIM 50KNFL	13.5	1050	77.8	5000K	80	8071	25°
LED14P38D50KSP	LED 13.5W P38 DIM 50KSP	13.5	1050	77.8	5000K	80	12418	15°

LED PAR38 120W Equivalent Options

15W PAR38 • Dimmable • 25,000 Hours • 5.3″ (MOL) x 4.8″ (DIA)

LED17P38D24KFL	LED 15W P38 DIM 24KFL	15	1050	70.0	2400K	80	—	40°
LED17P38D24KNFL	LED 15W P38 DIM 24KNFL	15	1050	70.0	2400K	80	—	25°
LED17P38D24KSP	LED 15W P38 DIM 24KSP	15	1050	70.0	2400K	80	—	15°
LED17P38D27KFL	LED 15W P38 DIM 27KFL	15	1200	80.0	2700K	80	2757	40°
LED17P38D27KFLB	LED 15W P38 DIM 27KFL BLACK	15	1200	80.0	2700K	80	2757	40°
LED17P38D27KNFL	LED 15W P38 DIM 27KNFL	15	1200	80.0	2700K	80	8857	25°
LED17P38D27KSP	LED 15W P38 DIM 27KSP	15	1200	80.0	2700K	80	16239	15°
LED17P38D30KFL	LED 15W P38 DIM 30KFL	15	1200	80.0	3000K	80	3106	40°
LED17P38D30KFLB	LED 15W P38 DIM 30KFL BLACK	15	1200	80.0	3000K	80	3106	40°
LED17P38D30KNFL	LED 15W P38 DIM 30KNFL	15	1200	80.0	3000K	80	9274	25°
LED17P38D30KNFLB	LED 15W P38 DIM 30KNFL BLACK	15	1200	80.0	3000K	80	9274	25°
LED17P38D30KSP	LED 15W P38 DIM 30KSP	15	1200	80.0	3000K	80	18492	15°
LED17P38D30KSPB	LED 15W P38 DIM 30KSP BLACK	15	1200	80.0	3000K	80	18492	15°
LED17P38D30KWFLB	LED 15W P38 DIM 30KWFL BLACK	15	1200	80.0	3000K	80	—	60°
LED17P38D35KFL	LED 15W P38 DIM 35KFL	15	1200	80.0	3500K	80	2994	40°
LED17P38D35KFLB	LED 15W P38 DIM 35KFL BLACK	15	1200	80.0	3500K	80	2994	40°
LED17P38D35KNFL	LED 15W P38 DIM 35KNFL	15	1200	80.0	3500K	80	9405	25°
LED17P38D35KNFLB	LED 15W P38 DIM 35KNFL BLACK	15	1200	80.0	3500K	80	9405	25°
LED17P38D35KSP	LED 15W P38 DIM 35KSP	15	1200	80.0	3500K	80	18094	15°
LED17P38D41KFL	LED 15W P38 DIM 41KFL	15	1200	80.0	4100K	80	2870	40°
LED17P38D41KFLB	LED 15W P38 DIM 41KFL BLACK	15	1200	80.0	4100K	80	2870	40°
LED17P38D41KNFL	LED 15W P38 DIM 41KNFL	15	1200	80.0	4100K	80	9288	25°
LED17P38D41KNFLB	LED 15W P38 DIM 41KNFLB	15	1200	80.0	4100K	80	9288	25°
LED17P38D41KSP	LED 15W P38 DIM 41KSP	15	1200	80.0	4100K	80	18408	15°
LED17P38D41KSPB	LED 15W P38 DIM 41KSP BLACK	15	1200	80.0	4100K	80	18408	15°
LED17P38D50KFL	LED 15W P38 DIM 50KFL	15	1200	80.0	5000K	80	2713	40°
LED17P38D50KFLB	LED 15W P38 DIM 50KFL BLACK	15	1200	80.0	5000K	80	2713	40°
LED17P38D50KNFL	LED 15W P38 DIM 50KNFL	15	1200	80.0	5000K	80	9387	25°
LED17P38D50KSP	LED 15W P38 DIM 50KSP	15	1200	80.0	5000K	80	19721	15°

LED PAR38 HIGH OUTPUT 150W Equivalent Options

18.5W PAR38 High Output • Dimmable • 25,000 Hours • 5.3″ (MOL) x 4.8″ (DIA)

LED17HOP38D27KFL	LED 18.5W HOP38 DIM 27KFL	18.5	1800	97.3	2700K	80	4346	40°
LED17HOP38D27KNFL	LED 18.5W HOP38 DIM 27KNFL	18.5	1800	97.3	2700K	80	9299	25°
LED17HOP38D27KSP	LED 18.5W HOP38 DIM 27KSP	18.5	1800	97.3	2700K	80	21535	15°
LED17HOP38D27KSPB	LED 18.5W HOP38 DIM 27KSP BLACK	18.5	1800	97.3	2700K	80	21535	15°
LED17HOP38D30KFL	LED 18.5W HOP38 DIM 30KFL	18.5	1825	98.6	3000K	80	4365	40°
LED17HOP38D30KFLB	LED 18.5W HOP38 DIM 30KFL BLACK	18.5	1825	98.6	3000K	80	4365	40°
LED17HOP38D30KNFL	LED 18.5W HOP38 DIM 30KNFL	18.5	1825	98.6	3000K	80	12782	25°
LED17HOP38D30KNFLB	LED 18.5W HOP38 DIM 30KNFL BLACK	18.5	1825	98.6	3000K	80	12782	25°
LED17HOP38D30KSP	LED 18.5W HOP38 DIM 30KSP	18.5	1825	98.6	3000K	80	23699	15°
LED17HOP38D30KSPB	LED 18.5W HOP38 DIM 30KSP BLACK	18.5	1825	98.6	3000K	80	23699	15°

NOTE: All items come in shipping cartons of 12.

continued next page

For the most up-to-date specs, please visit www.tcpi.com

LED PAR38 HIGH OUTPUT 150W Equivalent Options *continued*

18.5W PAR38 High Output • Dimmable • 25,000 Hours • 5.3″ (MOL) x 4.8″ (DIA)

ITEM #	DESCRIPTION	WATTS	LUMENS	LPW	COLOR	CRI	MEASURED CBCP	BEAM ANGLE
LED17HOP38D35KFL	LED 18.5W HOP38 DIM 35KFL	18.5	1850	100.0	3500K	80	3481	40°
LED17HOP38D35KFLB	LED 18.5W HOP38 DIM 35KFL BLACK	18.5	1850	100.0	3500K	80	3481	40°
LED17HOP38D35KNFL	LED 18.5W HOP38 DIM 35KNFL	18.5	1850	100.0	3500K	80	11664	25°
LED17HOP38D35KSP	LED 18.5W HOP38 DIM 35KSP	18.5	1850	100.0	3500K	80	23145	15°
LED17HOP38D35KWFL	LED 18.5W HOP38 DIM 35KWFL	18.5	1850	100.0	3500K	80	—	60°
LED17HOP38D41KFL	LED 18.5W HOP38 DIM 41KFL	18.5	1900	102.7	4100K	80	4604	40°
LED17HOP38D41KNFL	LED 18.5W HOP38 DIM 41KNFL	18.5	1900	102.7	4100K	80	11614	25°
LED17HOP38D41KSP	LED 18.5W HOP38 DIM 41KSP	18.5	1900	102.7	4100K	80	22458	15°
LED17HOP38D50KFL	LED 18.5W HOP38 DIM 50KFL	18.5	2000	108.1	5000K	80	4446	40°
LED17HOP38D50KNFL	LED 18.5W HOP38 DIM 50KNFL	18.5	2000	108.1	5000K	80	12467	25°
LED17HOP38D50KSP	LED 18.5W HOP38 DIM 50KSP	18.5	2000	108.1	5000K	80	21535	15°

NOTE: All items come in shipping cartons of 12.

For the most up-to-date specs, please visit www.tcpi.com

TCP®
325 Campus Dr. | Aurora, Ohio 44202 | P: 800-324-1496 | tcpi.com
©TCP AUG 2019/WF164451

FFLED26N

RAB

Rectangular shaped LED floodlight designed to replace 100W Metal Halide. patent-pending "Air-Flow" technology ensures long LED and driver lifespan. Use for building façades lighting, sign lighting, LED landscape lighting and instant-on security lighting.

Color: Bronze

Weight: 12.8 lbs

Project:	Type:
Prepared By:	Date:

Driver Info

Type	Constant Current
120V	0.24A
208V	0.15A
240V	0.13A
277V	0.11A
Input Watts	28.30W
Efficiency	92%

LED Info

Watts	26.00W
Color Temp	4000K (Neutral)
Color Accuracy	75 CRI
L70 Lifespan	100,000
Lumens	4,043
Efficacy	142.9 LPW

Technical Specifications

Listings

UL Listed:

Suitable for wet locations. Suitable for mounting within 1.2m (4ft) of the ground.

DLC Listed:

This product is listed by Design Lights Consortium (DLC) as an ultra-efficient premium product that qualifies for the highest tier of rebates from DLC Member Utilities.DLC Product Code: P7WJBTTWC

LED Characteristics

Lifespan:

100,000-hour LED lifespan based on IES LM-80 results and TM-21 calculations

LEDs:

Long-life, high-efficacy surface-mount LEDs

Color Consistency:

3-step MacAdam Ellipse binning to achieve consistent fixture-to-fixture color

Color Stability:

LED color temperature is warrantied to shift no more than 200K in CCT over a 5-year period

Color Uniformity:

RAB's range of CCT (Correlated Color Temperature) follows the guidelines of the American National Standard for (SSL) Products, ANSI C78.377-2017.

Electrical

Driver:

Constant Current, Class 2, 120-277V, 50-60Hz, 120V: 0.24A, 208V: 0.15A, 240V: 0.13A, 277V: 0.11A

THD:

8.47% at 120V, 17.83% at 277V

Power Factor:

99.1% at 120V, 90.3% at 277V

Note:

All values are typical (tolerance +/- 10%)

Construction

Lens:

Soda lime silica clear glass

Housing:

Die-cast aluminum housing, lens frame and mounting arm

Mounting:

Heavy-duty mounting arm with "O" ring seal & stainless steel screw

IP Rating:

Ingress Protection rating of IP66 for dust and water

Maximum Ambient Temperature:

Suitable for use in 40°C (104°F)

Cold Weather Starting:

Minimum starting temperature is -40°C (-40°F)

Effective Projected Area:

EPA = 0.65

Green Technology:

Mercury and UV free. RoHS-compliant components.

Copyright © 2019 RAB Lighting All Rights Reserved Note: Specifications are subject to change at any time without notice

Technical Specifications (continued)

Construction

Finish:

Formulated for high durability and long-lasting color

Optical

NEMA Type:

7H x 6V Beam Spread

Other

Warranty:

RAB warrants that our LED products will be free from defects in materials and workmanship for a period of five (5) years from the date of delivery to the end user, including coverage of light output, color stability, driver performance and fixture finish. RAB's warranty is subject to all terms and conditions found at rablighting.com/warranty.

Patents:

The FFLED design is protected by U.S. Pat. D643,147, Canada Pat. 140798, China Pat. ZL201130171304.1, Mexico Pat. 36757 and pending patent in Taiwan.

Buy American Act Compliance:

RAB values USA manufacturing! Upon request, RAB may be able to manufacture this product to be compliant with the Buy American Act (BAA). Please contact customer service to request a quote for the product to be made BAA compliant.

Dimensions

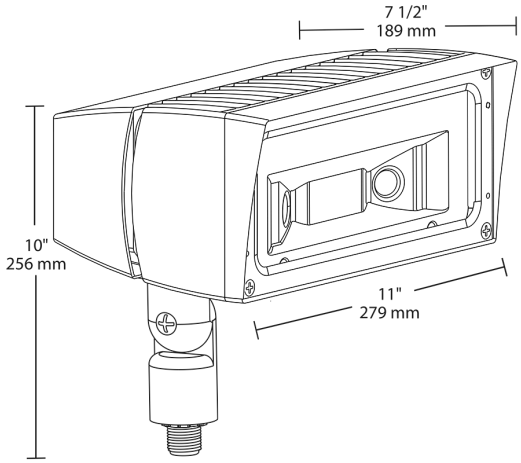

Features

- Ultra-efficient LED and optical design
- Replaces 100W MH floodlights
- 100,000-hour life based on LM-80 results and TM-21 calculations
- "Air-Flow" technology heatsink
- 5-Year, No-Compromise Warranty

Copyright © 2019 RAB Lighting All Rights Reserved Note: Specifications are subject to change at any time without notice

FFLED26N

RAB

Ordering Matrix

Family	Wattage	Mounting	Color Temp	NEMA Type	Finish	Driver	Options	Other Options
FFLED	26		N					
	18 = 18W **26 =** 26W **39 =** 39W **52 =** 52W **80 =** 80W	**Blank =** Swivel Arm **SF =** Slipfitter **T =** Trunnion	**Blank =** 5000K (Cool) **N =** 4000K (Neutral) **Y =** 3000K (Warm)	**Blank =** 7H x 6V **B55 =** 5H x 5V **B44 =** 4H x 4V	**Blank =** Bronze **W =** White	**Blank =** On/Off [1] **/D10 =** 0-10V Dimming **/480 =** 480V On/Off [2] **/E =** 120-277V Battery Backup **/EC =** Cold Start Battery Backup	**Blank =** No Option **/PC =** 120V Photocell **/PC2 =** 277V Photocell **/PCS =** 120V Swivel Photocell **/PCS2 =** 277V Swivel Photocell **/PCS4 =** 480V Swivel Photocell **/PCU =** 120-277V Button Photocell **/MS =** Mini Sensor **/STL3 =** Stealth Sensor	**Blank =** Standard **USA =** BAA Compliant

[1] Dimming Driver for 18W, 26W & 39W models only
[2] Not available for 80W models

Copyright © 2019 RAB Lighting All Rights Reserved Note: Specifications are subject to change at any time without notice

BAYLED104NW

RAB | Indoor

104W LED high bay fixture with over 10,000 lumens. Reduces energy consumption by up to 70%. Ideal for large spaces, including warehouses, gymnasiums, and distribution centers.

Color: White

Weight: 27.9 lbs

Project:

Type:

Prepared By:

Date:

Driver Info

Type	Constant Current
120V	1.03A
208V	0.65A
240V	0.56A
277V	0.49A
Input Watts	122.00W
Efficiency	85%

LED Info

Watts	104.00W
Color Temp	4000K (Neutral)
Color Accuracy	75 CRI
L70 Lifespan	100,000
Lumens	15,049
Efficacy	123.4 LPW

Technical Specifications

Listings

UL Listing:

Suitable for damp locations with cord and hook. Suitable for wet locations with 3/4" pendant stem.

IESNA LM-79 & LM-80 Testing:

RAB LED luminaires and LED components have been tested by an independent laboratory in accordance with IESNA LM-79 and LM-80.

DLC Listed:

This product is on the Design Lights Consortium (DLC) Qualified Products List and is eligible for rebates from DLC Member Utilities. DLC Product Code: PAFX2V9L

LED Characteristics

LEDs:

Multi-chip, high-output, long-life LEDs

Lifespan:

100,000-hour LED lifespan based on IES LM-80 results and TM-21 calculations

Color Consistency:

3-step MacAdam Ellipse binning to achieve consistent fixture-to-fixture color

Color Stability:

LED color temperature is warrantied to shift no more than 200K in CCT over a 5-year period

Color Uniformity:

RAB's range of CCT (Correlated Color Temperature) follows the guidelines of the American National Standard for Specifications for the Chromaticity of Solid State Lighting (SSL) Products, ANSI C78.377-2017.

Construction

Ambient Temperature:

Suitable for use in 55°C (131°F)

Thermal Management:

Superior heat sinking with external Air-Flow fins

Housing:

Precision die-cast aluminum housing and door frame with 3-foot 600V power cord

Mounting:

Heavy-duty 3/4" NPS hook and 3-foot safety chain; is also 3/4" pendant mount-capable (pendant by others)

Recommended Mounting Height:

30 ft

Lens:

Tempered glass

Reflector:

Specular vacuum metallized polycarbonate

Gaskets:

High-temperature silicone

Finish:

Our environmentally friendly polyester powder coatings are formulated for high-durability and long-lasting color

Green Technology:

Mercury and UV free. RoHS-compliant components.

Other

Replacement:

Replaces 320W Metal Halide

Copyright © 2019 RAB Lighting All Rights Reserved Note: Specifications are subject to change at any time without notice

Technical Specifications (continued)

Other

Warranty:

RAB warrants that our LED products will be free from defects in materials and workmanship for a period of five (5) years from the date of delivery to the end user, including coverage of light output, color stability, driver performance and fixture finish. RAB's warranty is subject to all terms and conditions found at rablighting.com/warranty.

Buy American Act Compliance:

RAB values USA manufacturing! Upon request, RAB may be able to manufacture this product to be compliant with the Buy American Act (BAA). Please contact customer service to request a quote for the product to be made BAA compliant.

Electrical

Drivers:

Constant Current, 800mA, Class 2 with 6 kV surge protection, 100-277VAC, 50/60 Hz

THD:

8.21% at 120V, 9.75% at 277V

Power Factor:

99.5% at 120V, 93.8% at 277V

Dimensions

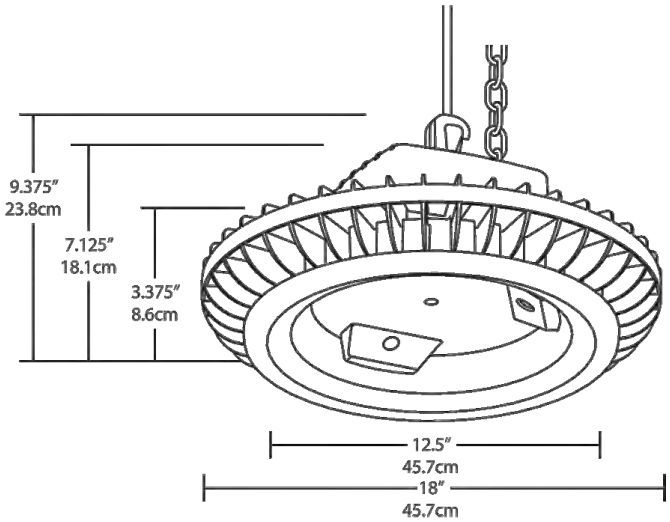

Features

- High output, high efficiency LED high bay
- Bi-level and dimming models available when installed with pendant by others
- Polyshield and wire guard accessories available for additional protection
- 100,000-hour lifespan
- 5-Year, No-Compromise Warranty

Ordering Matrix

Family	Wattage	Color Temp	Finish	Options	Other Options
BAYLED	104	N	W		
	78 = 78W **104 =** 104W	**Blank =** 5100K (Cool) **N =** 4000K (Neutral) **Y =** 3000K (Warm)	**W =** White	**Blank =** No Option **/BL =** Bi-Level **/D10 =** 0-10V Dimming **/D10/LC =** 0-10V Dimming w/ Lightcloud® Controller	**USA =** BAA Compliant **Blank =** Standard

Copyright © 2019 RAB Lighting All Rights Reserved Note: Specifications are subject to change at any time without notice

SYLVANIA Luminaires

Troffer Retrofit Kit

Catalog #	Type
Project	
Notes	
Date	
Prepared by	

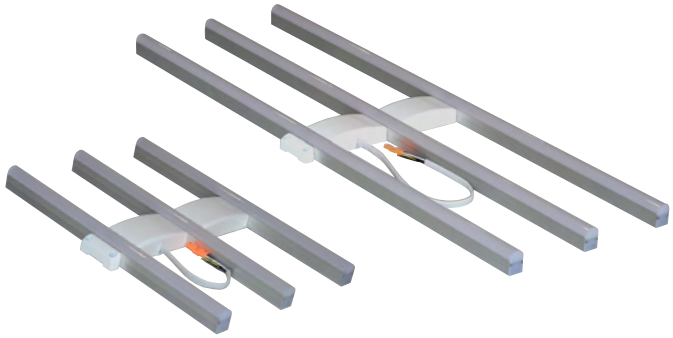

SYLVANIA Troffer Retrofit Kits are environmentally preferable LED alternatives for retrofitting traditional fluorescent lens troffer luminaires, offering up to 50% in energy savings. The kits are offered in two sizes/lamp configurations and are ideal for illuminating commercial spaces, offices, and retail applications.

The Troffer Retrofit Kits feature a safe, easy, and quick install in under 4 minutes, and they bypass the existing ballast to eliminate any ballast incompatibility issues. The SYLVANIA luminaires assure optimum light engine performance for extended service and rated life (≥50,000 hours L_{70}).

2x4 2-Lamp

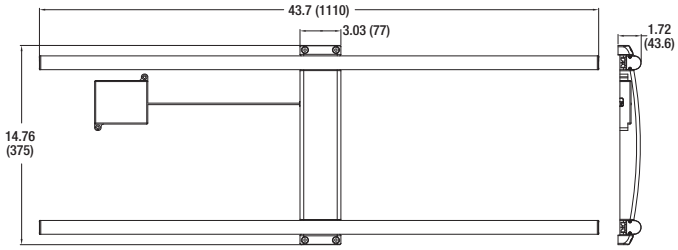

2x4 3-Lamp

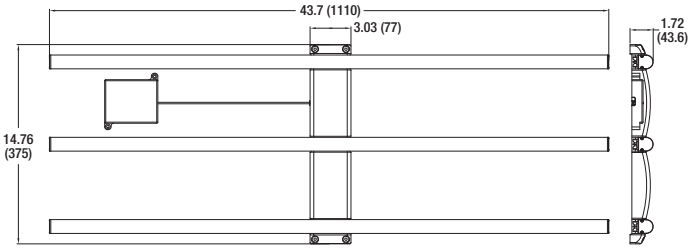

Dimensions are in inches (mm)

Dimensions

2x2 2-Lamp

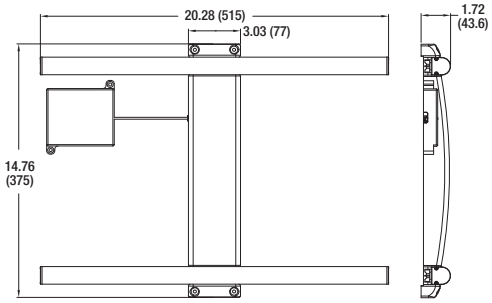

2x2 3-Lamp

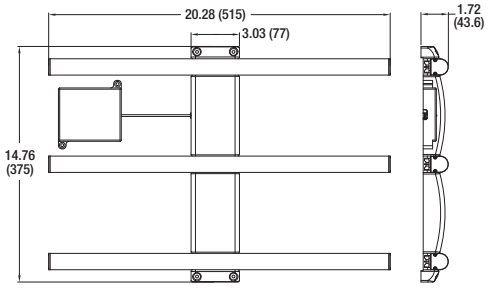

Dimensions are in inches (mm)

Specifications

Weight: 2x2 2-lamp (765g), 2x2 3-lamp (938g), 2x4 2-lamp (1123g). 2x4 3-lamp (1488g).

Construction: Lightweight plastic body with extruded aluminum light bars.

LED System: LED system with a life rating of ≥50,000 hours at L_{70} @25°C. Luminaire efficacy up to 125 LPW.

Electrical: Offered in 24, 26, 27 and 40 Watts, the luminaire is designed to operate through the 120-277 VAC universal voltage range. The LED driver is a constant current device. The power factor is ≥90% and THD is ≤20%.

Dimming: The driver is 0-10V dimmable (down to 10%).

Color Characteristics: CRI>80; CCT of 3000K, 3500K, 4000K, or 5000K.

Optics: Single white diffuse polycarbonate curved lens with 120° beam angle.

Installation: Retrofit kit to be installed inside existing troffer.

Operating Temperature: -4°F to +122°F (-20°C to +50°C).

Listings: cETLus classified to UL1598C standards and suitable for damp locations.

Warranty: Standard 5-year luminaire warranty (LED284R1).

Note: Specifications subject to change without notice. IES files available online.

Photometric Data

Average Illuminance (FC) at 30" AFF and avg/min uniformity
80/50/20 Reflectances

		8 ft Mounting Height			10 ft Mounting Height			12 ft Mounting Height		
		On Center Fixture Spacing			On Center Fixture Spacing			On Center Fixture Spacing		
		8'x10'	10'x10'	10'x12'	8'x10'	10'x10'	10'x12'	8'x10'	10'x10'	10'x12'
2 Ft – 2-Lamp	**24W**	35/1.8	29/1.6	25/1.7	34/1.8	28/1.6	24/1.4	32/1.8	27/1.7	23/1.5
2 Ft – 3-Lamp	**26W**	38/1.8	31/1.6	27/1.7	36/1.7	30/1.5	26/1.4	35/1.8	29/1.7	25/1.5
4 Ft – 2-Lamp	**27W**	37/1.9	30/1.6	26/1.8	36/1.8	29/1.5	25/1.5	34/1.8	28/1.7	24/1.5
4 Ft – 3-Lamp	**40W**	53/1.8	44/1.6	37/1.9	52/1.8	42/1.6	36/1.4	50/1.9	41/1.7	35/1.5

Ordering Guide

Item Number:

LED /	**TROFF** /	**XX** /	**XXX** /	**XXX** /	**D** /	**CRI**	**XX** /	**Dimensions** /	**Finish**

LED	Product Name
	TROFF
		# Lamps
		2L = 2 lamps
		3L = 3 lamps
			024 = 24W
			026 = 26W
			027 = 27W
			040 = 40W
				Voltage
				UNV = 120-277V
					D = 0-10V	8 = 80+	Color Temperature
							30 = 3000K
							35 = 3500K
							40 = 4000K
							50 = 5000K
								22 = 2x2
								24 = 2x4
									WH = White

Ordering Information

Kit Type	Item Number	Oredering Abbreviation	Wattage	Lumens	LPW	Beam Angle	Input Voltage	CCT	Dimming	CRI
2ft – 2 Lamp	75460*	LEDR/TROFF/2L/024/UNV/D/830/22/WH	24	3000	125	120	120-277V	3000K	0-10V	82
	75461*	LEDR/TROFF/2L/024/UNV/D/835/22/WH	24	3000	125	120	120-277V	3500K	0-10V	82
	75462*	LEDR/TROFF/2L/024/UNV/D/840/22/WH	24	3000	125	120	120-277V	4000K	0-10V	82
	75463*	LEDR/TROFF/2L/024/UNV/D/850/22/WH	24	3000	125	120	120-277V	5000K	0-10V	82
2ft – 3 Lamp	75431*	LEDR/TROFF/3L/026/UNV/D/830/22/WH	26	3200	123	120	120-277V	3000K	0-10V	82
	75432*	LEDR/TROFF/3L/026/UNV/D/835/22/WH	26	3200	123	120	120-277V	3500K	0-10V	82
	75433	LEDR/TROFF/3L/026/UNV/D/840/22/WH	26	3200	123	120	120-277V	4000K	0-10V	82
	75434*	LEDR/TROFF/3L/026/UNV/D/850/22/WH	26	3200	123	120	120-277V	5000K	0-10V	82
4ft – 2 Lamp	75427*	LEDR/TROFF/2L/027/UNV/D/830/24/WH	27	3200	119	120	120-277V	3000K	0-10V	82
	75428*	LEDR/TROFF/2L/027/UNV/D/835/24/WH	27	3200	119	120	120-277V	3500K	0-10V	82
	75429*	LEDR/TROFF/2L/027/UNV/D/840/24/WH	27	3200	119	120	120-277V	4000K	0-10V	82
	75430*	LEDR/TROFF/2L/027/UNV/D/850/24/WH	27	3200	119	120	120-277V	5000K	0-10V	82
4ft – 3 Lamp	75496*	LEDR/TROFF/3L/040/UNV/D/830/24/WH	40	4800	120	120	120-277V	3000K	0-10V	82
	75497*	LEDR/TROFF/3L/040/UNV/D/835/24/WH	40	4800	120	120	120-277V	3500K	0-10V	82
	75498	LEDR/TROFF/3L/040/UNV/D/840/24/WH	40	4800	120	120	120-277V	4000K	0-10V	82
	75499*	LEDR/TROFF/3L/040/UNV/D/850/24/WH	40	4800	120	120	120-277V	5000K	0-10V	82

* Made to order with lead time.

Application Information

Application Notes

1. The troffer retrofit kit (all models) is compatible with the Bodine emergency back-up model ELI-S-100 and IOTA models IIS-125 and IIS-35.
2. Check fixture compatibility with our troffer retrofit kit before installation.
3. Check the compatible troffer list at: https://www.sylvania.com/en-us/products/solid-state-lighting-led/Pages/LED-RT-Literature-Gallery.aspx
4. Qualifies for DLC 4.1.

LEDVANCE LLC
200 Ballardvale Street
Wilmington, MA 01887 USA
Phone 1-800-LIGHTBULB (1-800-544-4828)
www.sylvania.com

SYLVANIA and LEDVANCE are registered trademarks.
All other trademarks are those of their respective owners.
Licensee of product trademark SYLVANIA in general lighting.
Specifications subject to change without notice.

/sylvania /sylvania

© 2019 LEDVANCE LLC

GLOBAL ENERGY & LIGHTING

GLEDPHB2 100W

PURE HIGH BAY SPECIFICATION SHEET

OPTICAL SPECS

System Efficacy	Up to 130 Lm/W (CCT = 50K)
Lumen Output	13,000 Lumens (CCT = 50K)
CCT	30K / 40K / 50K
CRI	70 / 80 Ra
Beam Angle	50°, 90°, 120°

ELECTRICAL SPECS

System Power Usage	100W
Input Voltage	AC 100 - 277 Volts
Power Frequency	50 ~ 60 Hz
Power Factor	> 0.92
Total Harmonic Distortion	< 15%

FIVE YEARS 5 YEAR WARRANTY

CERTS

RoHS

FC

CE

CB

c UL us LISTED

DIMENSIONS

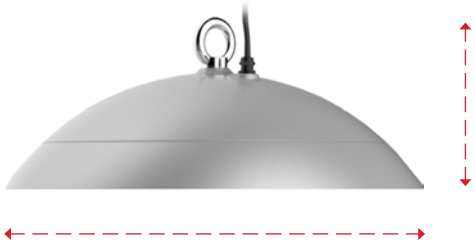

Diameter: 19.25in (489 mm)
Height: 7.8 in (200 mm)

BEAM ANGLES

50° 90° 120°

OTHER DETAILS

Fixture Material	Aluminum Alloy
Ingress Protection	IP66
Luminaire Net Weight	7.2 ± 0.3 Kg
Lifespan	> 50,000 Hours
Operating Humidity	15 - 90%
Operating Temperature	-22° ~ 122°F (-30° ~50°C)
Storage Temperature	-40° ~ 158°F (-40° ~70°C)
Product Dimensions	ø19.25 x 7.8 in (ø489 x 200 mm)
Standard Cord Length	1.5 Meter

FIXTURE ACCESSORIES

Bezel Color	● ● ○ ● ● ●
Alternate Lens	Frosted or Clear PC
Cord Options	Length / Type

*Consult your GEL sales representative or the DLC QPL for specific model certifications.

Standard Fixture:Silver Bezel with 120° Beam Angle

GLEDPHB2 SKU CREATOR

WWW.GEL-USA.COM
1 (800) 992-7370

After choosing options to create the perfect controlled fixture for your space, this chart will help you create the correct SKU necessary to order.

PURE HIGH BAY

PRODUCT	WATTAGE	A CCT	B BEAM ANGLE
GLEDPHB2	100W	30K / 40K / 50K	50 / 90 / 120
GLEDPHB2	120W	30K / 40K / 50K	50 / 90 / 120
GLEDPHB2	150W	30K / 40K / 50K	50 / 90 / 120
GLEDPHB2	200W	30K / 40K / 50K	50 / 90 / 120

Create your SKU:

GLEDPHB2			
PRODUCT	WATTAGE	CCT	BEAM ANGLE

Accessory SKUS (if applicable)	Fixture Quantity

SKU CREATOR GUIDELINES

- Options in chart separated by slash (/)
- Choose one option per column.
- All characters must **always** utilize capitalization. No special characters (/, &, #, etc.) will be permitted.
- White space in between columns indicates single space in SKU.

SKU CREATOR CATEGORY KEY

A **CCT** - COLOR TEMPERATURE

30K - 3,000 Kelvin
40K - 4,000 Kelvin
50K - 5,000 Kelvin

B **BEAM ANGLE**

Degrees at which light is distributed. Photometrics diagrams can be found on the options page.

ACCESSORY SKUS

Order accessories as separate part number from your Fixture SKU.
Learn more about these options on the Accessories Page.

ALTERNATE LENSES	BEZEL COLORS	CORD & PLUG ENDS
GLEDPHB2A Clear PC Lens	GLEDPHB2A BC Custom	GLEDPHB2A CC
GLEDPHB2A Frosted PC Lens	GLEDPHB2A BC Red	GLEDPHB2A EXT 1.5
GLEDPHB2A 120 Lens	GLEDPHB2A BC Grey	GLEDPHB2A 5-15P
GLEDPHB2A 90 Lens	GLEDPHB2A BC White	GLEDPHB2A L5-15P
GLEDPHB2A 50 Lens	GLEDPHB2A BC Yellow	GLEDPHB2A L6-15P
	GLEDPHB2A BC Blue	GLEDPHB2A L7-15P
	GLEDPHB2A BC Black	GLEDPHB2A L7-20P

NOTES

FIXTURE OPTIONS

PHOTOMETRICS

For certification information or questions concerning beam angle options, please consult your GEL sales representative.

50°

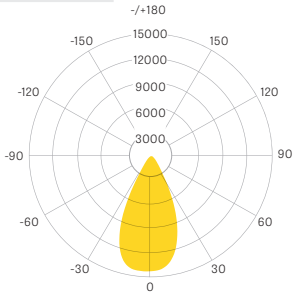

90°

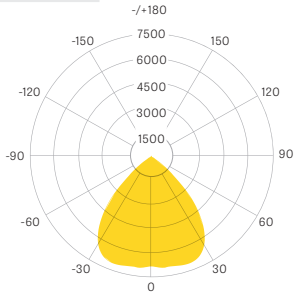

120°

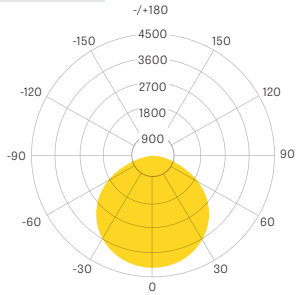

ALTERNATE LENSES

50 / 90 / 120

Polycarbonate Optic lenses which set beam angle to 50°, 90° or 120°.

GLEDPHB2A (50, 90 or 120) Lens

Clear Polycarbonate

Clear cover maximizes light. Beam angle approximately 120°.

GLEDPHB2A Clear PC Lens

Frosted Polycarbonate

Frosted coverage diffuses light and reduces glare. Beam angle approximately 120°.

GLEDPHB2A Frosted PC Lens

INSTALLATION

LOOP MOUNTING

The Pure High Bay fixture mounts safely through a seamless metal hook.

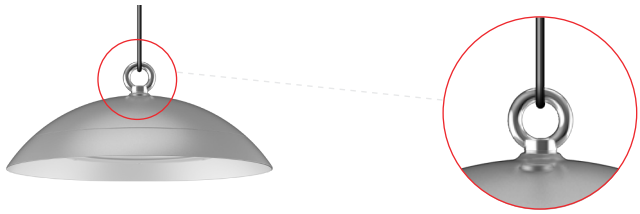

CORD & PLUGS

SKU	DESCRIPTION
GLEDPHB2A EXT 1.5	1.5 Meter Cord Extension (3 meters overall)
GLEDPHB2A 5-15P	Straight Blade 120v NEMA 5-15P Plug End
GLEDPHB2A L5-15P	Twist Lock 120v NEMA L5-15 Plug End
GLEDPHB2A L6-15P	Twist Lock 208/240v NEMA L6-15 Plug End
GLEDPHB2A L7-15P	Twist Lock 277v NEMA L7-15 Plug End
GLEDPHB2A L7-20P	Twist Lock 277v NEMA L7-20 Plug End

SKU	PHOTO
GLEDPHB2A CC IP65 Cable Connector (extends cable length)	

BEZEL COLOR

Customize your fixtures by adding color to integrate them more thoroughly into your space or connect them with your brand. As well as the color options pictured here, you also have the option to choose a completely custom bezel color.

Choose a custom color.

Your Choice
GLEDPHB2A BC Custom
(MOQ 500)

RAL3028
GLEDPHB2A BC Red

RAL9017
GLEDPHB2A BC Black

RAL9016
GLEDPHB2A BC White

RAL5005
GLEDPHB2A BC Blue

RAL7042
GLEDPHB2A BC Grey

RAL1018
GLEDPHB2A BC Yellow

Fail-Safe

DESCRIPTION

Designed with asthetics as a high priority, the tasteful FVS8 combines style with strength. Ideally suited for high abuse areas, Fail-Safe's FVS8 is offered as ceiling or wall-mounted, to provide general ambient illumination. Designed for use in public access areas where vandalism may occur and for areas that must maintain a clean, well-illuminated appearance.
Ideal for schools, dormitories, hallways, locker rooms, shower facilities, and restrooms.

Catalog #		Type
Project		
Comments		Date
Prepared by		

SPECIFICATION FEATURES

Fasteners
Captive, stainless steel tamperproof, T20 TORX ®-head screws prevent unauthorized access.

Housing
Die-formed 16 ga. Steel (FVS8P), 18 ga. Steel (FVS8M) with welded and ground ends. Stainless steel housing available.

Finish
Matte white electrostatically applied powder coat finish. Gloss white and anti-microbial white painted finish available.

Gasket
Concealed, polyurethane end gaskets inhibit the entrance of environmental contaminants.

Lens
Nominal 0.125", UV stabilized, clear Pattern 12, impact-resistant, prismatic polycarbonate refractor for high efficiency, low surface brightness and maximum strength. Opal smooth available. 0.187" thick clear Pattern 12 prismatic clear polycarbonate available. **Lifetime Lens Warranty**.

LEDs
Available with 3000K, 3500K,4000K, 5000K with minimum of 80CRI. Projected life is 50,000 hours at 70% lumen maintenance.

Lens Retention
The FVS8P double-wall lens channel captivates lens to prevent unauthorized fixture penetration. Screws along each side to ensure maximum lens captivation. FVS8M incorporates (2) tamper resistant screws, one on each endcap.

Transformer/Driver
Electronic driver 120V-277V, 0-10V. Dimming available 10% and 1%.

Compliance
UL listed for damp location, wet location listed under covered ceiling optional (FVS8P only).

Warranty
5 Year warranty on LED's and electrical. Lifetime warranty if fixture found to be inoperative due to physical abuse for duration of the installation.

FVS8

LD4 LED

8" Wide
2',3',4',8' Length
Polycarbonate Lens
Vandal Resistant

Ceiling/Wall

FVS8P

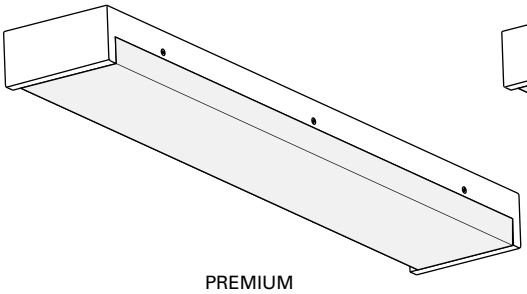

PREMIUM

FVS8M

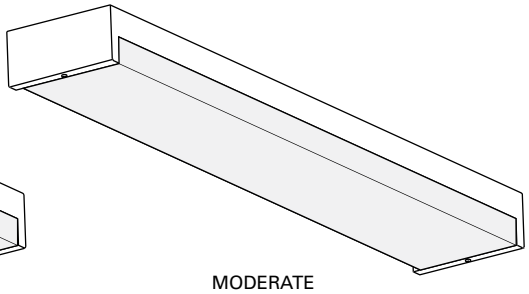

MODERATE

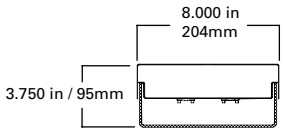

FVS8P	
Length	# Screws each side
2′	2
3′	2
4′	3
8′	5

	FVS8P	FVS8M
Housing	16GA Steel	18GA Steel
Listing	UL listed Damp Location Wet Optional	UL listed Damp Location
Construction	Screws along fixture edge	Screws on Endcaps

TORX® is a registered trademark of Camcar Division of Textron Inc.

Powering Business Worldwide

ORDERING INFORMATION

SAMPLE NUMBERS: FVS8M-8-LD4-3STD-35-UNV-OPL-EDC1-EL7W
FVS8P-4-LD4-2STD-30-120-P187-EDC1-OS1-WL

Product Family		Length	LED	No. of LEDs	Illumination Level	Color Temp	Voltage	Lens	Driver	Options
FVS8			**LD4**							

FVS8 =High Abuse 8″ wide Surface Luminaire

M=Moderate
P=Premium [3]

2=2′ length
3=3′ length
4=4′ length
8=8′ length

LD4 =Linear LED, Version 4

1=1 row LED module in X-section
2=2 rows LED module in X-section
3=3 rows LED module in X-section

LO=Low
STD=Standard
HI=High

30=3000K
35=3500K
40=4000K
50=5000K

120=120 Volt
277=277 Volt
UNV=120-277 Volt

P125= .125″ Clear polycarbonate prismatic lens
P187= .187″ Clear polycarbonate prismatic lens
OPL= .125″ Polycarbonate smooth opal lens

EDC1=Electronic driver, Non-Dimming, 1 circuit
EDC2=Electronic driver, Non-Dimming, 2 circuits
EDD1=Electronic driver, Dimming 10%, 1 circuit
EDD2=Electronic driver, Dimming 10%, 2 circuits
ED1D1=Electronic driver, Dimming 1%, 1 circuit
ED1D2=Electronic driver, Dimming 1%, 2 circuits

EL7W=7 watt EM Pack [1]
EL14W=14 watt EM Pack [1]
SHP=Stainless steel, painted housing
SHB=Stainless steel, brushed housing
OS1=Internal Occupancy Sensor [2] (behind lens), connected to one LED module. Specify 120 or 277 voltage.
OS2=Internal Occupancy Sensor [2] (behind lens), connected to two LED modules. Specify 120 or 277 voltage.
WL=Wet location, listed under [3] covered ceiling (FVS8P only)
GW=Gloss white finish on exposed surfaces.
AM=Anti-mircrobial finish on exposed surfaces.
NTP=Non-tamper proof screws

Notes:

1 **2HI, 3STD, 3HI not available with EL7W or EL14W.**
2 **OS1 and OS2 require 120 or 277 to be specified in the ordering logic.**
3 **Only FVS8P is listed wet location under covered ceiling.**

MOUNTING DIMENSIONS

2′,3′,4′ - Mounting Dimensions

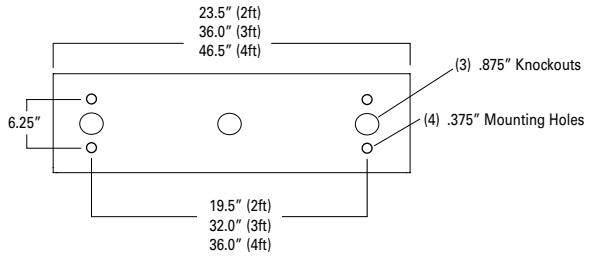

8′ - Mounting Dimensions

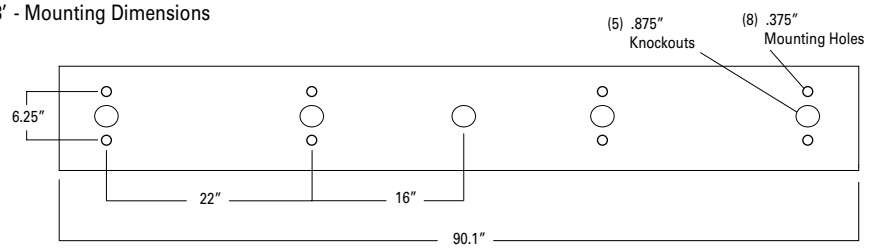

NOMINAL INPUT WATTS

	Fixture Length	# Modules in Cross-Section/ Illumination Level	Nominal InputWatts	Nominal Delivered Lumens (4000K)
FVS8	2'	2LO	23.7	2781
		2STD	33.5	3718
		2HI	44.2	4540
		3LO	36.0	4163
		3STD	50.6	5537
		3HI	66.5	6449
	3'	2LO	40.7	5033
		2STD	54.7	6456
		2HI	69.3	7744
		3LO	61.5	7535
		3STD	82.5	9653
		3HI	104.9	11556
	4′	2LO	45.5	5675
		2STD	64.9	7601
		2HI	85.4	9295
		3LO	68.8	7959
		3STD	98.5	11392
		3HI	129.5	13841

- Nominal input wattage values include LED voltage, drive currents and typical driver efficiency.
- Refer to LM 79 data/photometric files for exact delivered lumen values and input wattage. Values in table are nominal values only.

Approximate Lumen Multiplier

Tested with P125 lens	
P187	0.92
OPL	0.60

Approximate Color Temperature Multiplier

5000K	1.1
4000K	1.0
3500K	0.95
3000K	0.93

E-VTB Series

LED Vapor Tight Jelly Jar
Replaces up to 200W Incandescent

Sturdy. Sleek. Sold.

Lasting over 100,000 maintenance-free hours, the cULus listed E-VTB Series Vapor Tight Jelly Jar makes installation simpler than ever, with threaded and plugged 1/2" conduit entry points for multiple mounting options, plus built-in 4KV surge protection and a multi-voltage driver that accepts 120-277V. With an IP65 rating, it's sturdy and durable enough to withstand the harshest environments, yet its sleek design makes for an aesthetically pleasing appearance. The E-VTB Series comes packed with an 80 CRI, a 5-year warranty, and two available CCT's: 4000K and 5000K.

Efficient

- Over 80% energy savings over traditonal technology
- Comes with a diffused glass lens for an even illumination without the harsh visibility of the LED's
- Built-in 4KV surge protection

Durable

- Sturdy design built to withstand the harshest environment

Recommended Use

- Warehouses
- Industrial
- Retail
- Entryways

Input Voltage

- Universal (120V through 277V Operation)

Certifications

5 YEAR WARRANTY | WET LOCATION SUITABLE | c UL us LISTED | IP65

"WARNING - Cancer and Reproductive Harm - www.p65warnings.ca.gov"

e-conolight®

1501 96th Street, Sturtevant, WI 53177 | Phone (888) 243-9445 | Fax (262) 504-5409 | www.e-conolight.com

E-VTB Series

Ceiling Mount

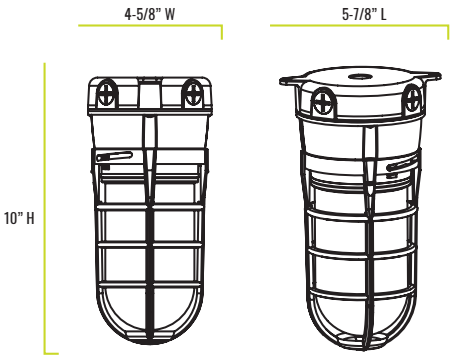

Wall Mount

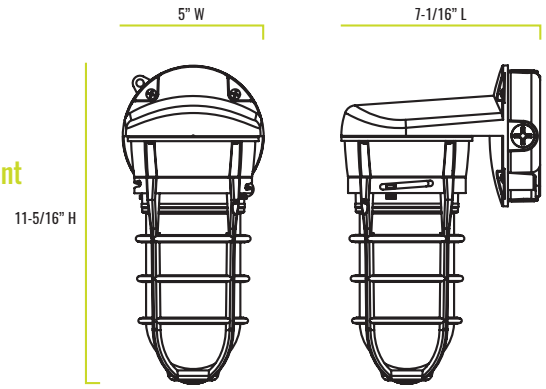

Series Overview

DIMENSIONS	PRODUCT WEIGHT	MOUNTING HEIGHT	SPACING
Ceiling Mount 5 7/8"**L** x 4 5/8"**W** x 10"**H**	3.04 lbs.	Up to 15 feet	15 feet
Wall Mount 7 1/16"**L** x 5"**W** x 11 5/16"**H**	3.70 lbs.		

Fixture Specifications

HOUSING	Die-cast aluminum housing and lamp guard. Gray polyester powder-coat finish.
LENS ASSEMBLY	Screw-in, frosted glass globe provides uniform light distribution.
MOUNTING	Ceiling or Wall Mount (5) 1/2-inch threaded conduit entry points

Electrical Performance

OPERATING RANGE	LIFESPAN L_{70} AT 25°C (77°F)	POWER FACTOR	TOTAL HARMONIC DISTORTION	DIMMABLE
-30°C to 45°C (-31°F - 113°F)	Estimated >100,000 Hours	> 0.9	< 20%	No

INPUT VOLTAGE CURRENT DRAW (AMPS.)	120V	208V	240V	277V
E-VTB01 - 1000 lumens	0.09A	0.05A	0.05A	0.04A
E-VTB02 - 1900 lumens	0.18A	0.12A	0.1A	0.09A

CORRELATED COLOR TEMPERATURE (CCT)

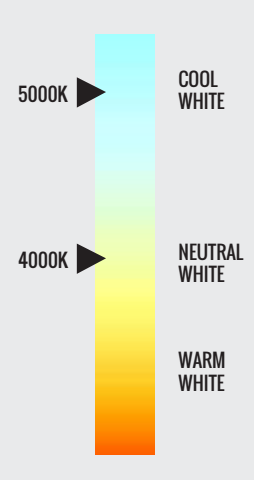

Due to continuous product improvement, information in this document is subject to change.
The UL logo is a registered trademark of UL LLC.

Revision Date: 07/29/19

1501 96th Street, Sturtevant, WI 53177 | Phone (888) 243-9445 | Fax (262) 504-5409 | www.e-conolight.com

E-VTB Series

Warranty & Certifications

WARRANTY	cULus LISTED
5-Year Limited	Wet Locations

Output Specifications

SKU	LIGHT OUTPUT	COLOR TEMP	POWER CONSUMPTION	COLOR ACCURACY	MOUNT TYPE	REPLACES
E-VTB02A-CM401G	1900 Lumens	Neutral White (4000K)	22W	≥ 80 CRI	Ceiling mount	200W Incandescent
E-VTB02A-CM501G	1900 Lumens	Cool White (5000K)	22W	≥ 80 CRI	Ceiling mount	200W Incandescent
E-VTB02A-WM401G	1900 Lumens	Neutral White (4000K)	22W	≥ 80 CRI	Wall mount	200W Incandescent
E-VTB02A-WM501G	1900 Lumens	Cool White (5000K)	22W	≥ 80 CRI	Wall mount	200W Incandescent
E-VTB01A-CM401G	1000 Lumens	Neutral White (4000K)	12W	≥ 80 CRI	Ceiling mount	100W Incandescent
E-VTB01A-CM501G	1000 Lumens	Cool White 5000K)	12W	≥ 80 CRI	Ceiling mount	100W Incandescent
E-VTB01A-WM401G	1000 Lumens	Neutral White (4000K)	12W	≥ 80 CRI	Wall mount	100W Incandescent
E-VTB01A-WM501G	1000 Lumens	Cool White 5000K)	12W	≥ 80 CRI	Wall mount	100W Incandescent

Accessories

Aluminum Shroud
SKU: **E-MTAC01S**
NOTE: **For use with Ceiling Mount type only**

Due to continuous product improvement, information in this document is subject to change.
The UL logo is a registered trademark of UL LLC.

Revision Date: 07/29/19

1501 96th Street, Sturtevant, WI 53177 | Phone (888) 243-9445 | Fax (262) 504-5409 | www.e-conolight.com

FLAT LED PANEL SERIES

2' X 4' FLAT LED PANEL

7500 LUMENS	9000 LUMENS
60 WATT	72 WATT
According to DLC Test Results	According to DLC Test Results

The FPLA1-LED flat led panel are DLC Premium Listed, delivers high Lumen of exceptional 85+ CRI light while achieving about 120 lumens per watt. It is available in 4000k, 5000k DLC Premium CCT options and has 0-10V dimming, which is perfect for new construction applications or retrofitting existing fluorescent troffer fixtures with recessed installation,widely used in office spaces, major retail stores, education,government, healthcare, and hospitality

LED CHIP - Use approved LM-80 SMD packing,Active color management maintains superior color consistency over time and temperature.Every fixture is tuned as a complete system to the optimal color point before shipment,ensuring fixture-to-fixture color consistency.

HEAT SINK - The source and radiator distribution in fixture around, heat source distribution placed solve heat concentration, quantity of heat conduction of each other and radiation, effective to solve thermal management system design of the cooling.This enables the LEDs to consistently run cooler, providing significant boosts to lifetime, efficacy, and color consistency.

OPTICAL SYSTEM - Proprietary optical system utilizes a unique combination of reflective and refractive optical components to achieve a uniform, comfortable appearance. Use guide plate laser high density pixels to shine, and has the light even, high lum maintenance, shiny surface, no shelter Angle, and no glare, high efficacy.

THERMAL MANAGEMENT - LED light engines are attached directly to the housing which keeps the engines cool. Our advanced thermal management system allows the light output of the LED engines to be maintained at 70% of initial lumens at 83,000 hours of operation.

DIMMING - The FPLA1-LED comes standard with 0-10Vdimming on either 120 or 277V. Dimmable down to 1% of initial lumens.

ELECTRICAL - Powered by high-quality constant-current power LED drivers which are rated for 50 to 60Hz at 120-277V input, produce less than 20% THD, and have a power factor of .90 to 1.00.

MAINTENANCE - LED engines and driver can be accessed through the bottom by removing hinged door frame and driver box cover. LED engines are removable and upgradable even after fixture installation. Fixture can be regularly and safely wiped down to ensure optimal fixture performance.

OPTIONS - Fixtures can be shipped pre-installed with daylight harvesting controls, occupancy sensors, and/or power pack. Available manufacturer options include Leviton, Wattstopper, Hubble Automation, and others.

QUALITY CONTROL - Every fixture is turned on and rigorously tested by our QC Department before shipping.

LISTING - DLC Premium, Listed for Damp Location

WARRANTY - Limited 5 Year Warranty

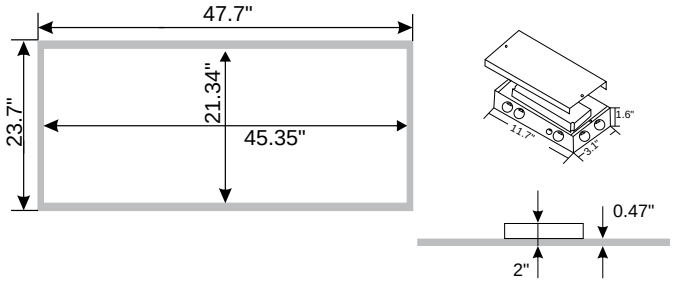

DAMP LOCATION

SAMEDAY SHIPPING (On selected configuration, consult factory)

PROUDLY ASSEMBLED in AMERICA

c UL us LISTED

Ordering Information: Example: 24-FPLA1-LED-9000L-DIM10-MVOLT-40K-85

24	FPLA1	LED							
FIXTURE SIZE	**SERIES**	**TYPE**	**LUMENS**	**DIMMING**	**VOLTAGE**	**CCT**	**CRI**	**EMERGENCY**	
24 - 2' X 4'	**FPLA1**-Oracle Flat LED Panel	**LED**	**7500L** - (7500 lumens) **9000L** - (9000 lumens)	**DIM10** - 0-10V Dimming	**MVOLT** **347*** * Consult factory for details	**35K** - (3500K) **40K** - (4000K) **50K** - (5000K)	**85**	**0-EMG-LED**	

OTHER OPTIONS

24-FPL1-LED-SMK - Surface Mount Kit
LMFC-011 - Digital On/Off/0-10V Dimming Fixture Controller
CLM-WCM - Osram Connected Lighting Module w/ Wireless Control Module

EASYFIT
by EnOcean

Controls Options to be Installed on the Fixture

Self-powered sensors and switches, combined with LED fixture controllers and a commissioning tool, permit easy configuration, intelligent local control, and seamless integration into building automation systems.

LEDRU
LED Relay Zone Controller 0-10V

LEDDU
LED Zone Controller 0-10V

Controls Provided by EnOcean

EOSCU
Occupancy Sensor Ceiling Mount

EOSWU
Occupancy Sensor Wall Mount

ELLSU
Daylight Sensor Ceiling Mount

ESRPU/ EDRPU
Wall Switches

LEVITON
Wall Switches
902 MHz category

NWC 300U
Navigan Wireless Commissioner

PHILIPS
EasySense

Philips EasySense sensors provide luminaire-level control with Occupancy sensing, Daylight harvesting, and Field task tuning.

Controls Installed on the Fixture

SRB
Fixture will be Shipped Sensor Ready with SRB Bridge . Fixture will be Compatible with EasySense Sensor SNS200-CMP which can be Added in the Field for Remote Mounting. Fixture May Only be Controlled with Philips Field App or Wireless Switches or any 0-10V. Wall Box Dimmer.

PHILIPS-XSR + SNS200-CMP
Fixture will be Shipped Sensor Ready with PHILIPS-XSR driver and EasySense SNS200-CMP Sensor which is Included to be Remote Mounted. Fixture May Only be Controlled with Philips Field App or Wireless Switches

SRB + SNS200-CMP
Fixture Will be Shipped Sensor Ready with PHILIPS SRB Bridge and EasySense SNS200-CMP Sensor which is Included to be Remote Mounted. Fixture May Only be Controlled with Philips Field App or Wireless Switches or any 0-10V. Wall Box Dimmer.

Controls Provided by Philips

ZBT-S1AWH

ZBT-S2AWH

Illumra Wireless Switches

Philips Field App

CONTROL OPTIONS

LUTRON

Controls Installed on the Fixture

FCJS-010
Individual
Fixture Control

Fixture Will be Shipped LUTRON VIVE Enabled with LUTRON FCJS-010 0-10V Control Module Installed on the Fixture. Fixtures will be compatible with Lutron FC-SENSOR Occupancy/ Daylight Sensor or FC-VSENSOR Vacancy/Daylight Sensor which can be Added in the Field for Remote Mounting. Fixture May be Controlled with any Vive control systems. Fixtures must be ordered with a 0-10V. Driver.

FCJS-ECO
Individual
Fixture Control

Fixture Will be Shipped LUTRON VIVE Enabled with LUTRON FCJS-ECO EcoSystem Control Module Control Module Installed on the Fixture. Fixtures will be compatible with Lutron FC-SENSOR Occupancy/Daylight Sensor or FC-VSENSOR Vacancy/Daylight Sensor which can be Added in the Field for Remote Mounting. Fixture May be Controlled with any Vive control systems. Fixtures must be ordered with a Lutron Driver.

Controls Provided by Lutron

Lutron
App

Vive Wireless Hub

DayLight
Sensor

Ceiling Mount
Occupancy Sensor

Ceiling Mount
Occupancy/Daylight
Sensor

Wall Mount
Occupancy Sensor

Wall Mount
Switch

Pico
Remote

WPLED52N

RAB

LED 52W Wall packs. 3 cutoff options. patent-pending thermal management system. 100,000 hour L70 lifespan. 5-year, no-compromise warranty.

Color: Bronze

Weight: 21.6 lbs

Project:

Type:

Prepared By:

Date:

Driver Info

Type	Constant Current
120V	0.51A
208V	0.33A
240V	0.29A
277V	0.24A
Input Watts	56.90W
Efficiency	91%

LED Info

Watts	52.00W
Color Temp	4000K (Neutral)
Color Accuracy	76 CRI
L70 Lifespan	100,000
Lumens	7,320
Efficacy	128.6 LPW

Technical Specifications

Listings

UL Listed:

Suitable for wet locations

IESNA LM-79 & IESNA LM-80 Testing:

RAB LED luminaires and LED components have been tested by an independent laboratory in accordance with IESNA LM-79 and LM-80.

DLC Listed:

This product is on the Design Lights Consortium (DLC) Qualified Products List and is eligible for rebates from DLC Member Utilities. DLC Product Code: P00001742

LED Characteristics

Lifespan:

100,000-hour LED lifespan based on IES LM-80 results and TM-21 calculations

LEDs:

Two (2) multi-chip, high-output, long-life LEDs

Color Consistency:

3-step MacAdam Ellipse binning to achieve consistent fixture-to-fixture color

Color Stability:

LED color temperature is warrantied to shift no more than 200K in CCT over a 5-year period

Color Uniformity:

RAB's range of CCT (Correlated Color Temperature) follows the guidelines of the American National Standard for Specifications for the Chromaticity of Solid State Lighting (SSL) Products, ANSI C78.377-2017.

Construction

Ambient Temperature:

Suitable For use in 40°C (104°F)

Cold Weather Starting:

Minimum starting temperature is -40°C (-40°F)

Housing:

Precision die-cast aluminum housing, lens frame

Mounting:

Die-cast aluminum wall bracket with (5) 1/2" conduit openings with plugs. Two-piece bracket with tether for ease of installation and wiring.

Arm:

Die-cast aluminum with wiring access plate

Cutoff:

Standard (15°)

Reflector:

Specular vacuum-metallized polycarbonate

Gaskets:

High-temperature silicone

Lens:

Tempered glass

Finish:

Formulated for high durability and long-lasting color

Green Technology:

Mercury and UV free. RoHS-compliant components.

Copyright © 2019 RAB Lighting All Rights Reserved Note: Specifications are subject to change at any time without notice

Technical Specifications (continued)

Electrical

Driver:

Constant Current, 720mA, Class 2, 100 - 277V, 50 - 60 Hz, 100 - 277VAC .8 Amps.

THD:

7.64% at 120V, 5.72% at 277V

Power Factor:

99.1% at 120V, 97.5% at 277V

Surge Protection:

6kV

Other

Warranty:

RAB warrants that our LED products will be free from defects in materials and workmanship for a period of five (5) years from the date of delivery to the end user, including coverage of light output, color stability, driver performance and fixture finish. RAB's warranty is subject to all terms and conditions found at rablighting.com/warranty.

Patents:

The WPLED design is protected by patents in the U.S. Pat D653,377, Canada Pat. 142252, China Pat. ZL201130356930.8, and Mexico Pat. 36921 and pending patent in TW.

Replacement:

Replaces 250W HID

Buy American Act Compliance:

RAB values USA manufacturing! Upon request, RAB may be able to manufacture this product to be compliant with the Buy American Act (BAA). Please contact customer service to request a quote for the product to be made BAA compliant.

Optical

BUG Rating:

B0 U2 G3

Dimensions

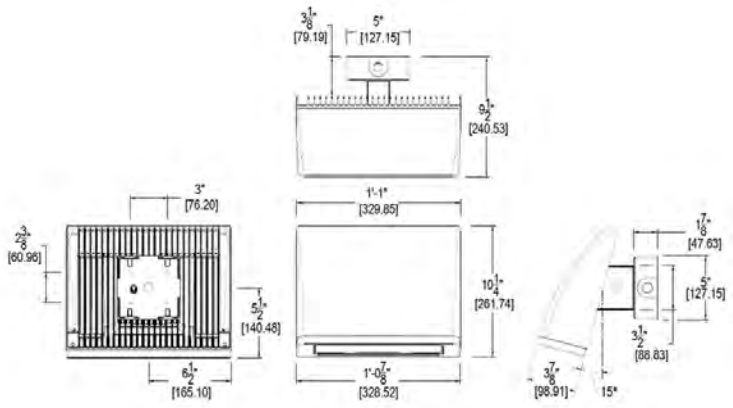

Features

- High performance LED light engine
- Maintains 70% of initial lumens at 100,000-hours
- Weatherproof high temperature silicone gaskets
- Superior heat sinking with die cast aluminum housing and external fins
- Replaces 250W MH
- Traditional wall pack look from the front
- 3 cutoff options
- 5-Year, No-Compromise Warranty

Ordering Matrix

Family	Cutoff	Wattage	Color Temp	Finish	Driver Options	Options	Other Options
WPLED		52	N				
	Blank = Standard (15 degrees) **C =** Cutoff (7.5 degrees) **FC =** Full Cutoff (0 degrees)	**52 =** 52W **80 =** 80W	**Blank =** 5000K (Cool) **N =** 4000K (Neutral) **Y =** 3000K (Warm)	**Blank =** Bronze **W =** White	**Blank =** 120-277V **/480 =** 480V **/BL =** Bi-Level **/D10 =** 0-10V Dimming	**Blank =** No Option **/PCS =** 120V Swivel Photocell **/PCS2 =** 277V Swivel Photocell **/PCS4 =** 480V Swivel Photocell **/LC =** Lightcloud®	**USA =** BAA Compliant **Blank =** Standard

Copyright © 2019 RAB Lighting All Rights Reserved Note: Specifications are subject to change at any time without notice

Catalog Number
Notes
Type

Contractor Select™

JEBL

LED High Bay Light

The JEBL is built to last with 6kV surge protection standard, 55°C ambient temperature rating, and IP65 rated for elimination of dust, moisture and airborne contaminants. The unique, quick-connect driver-to-optical assembly interface allows for quick and easy maintenance for applications including warehousing, gymnasiums, manufacturing and outdoor canopies.

FEATURES:

- Robust 6kV surge protection standard, meeting the ANSI standard for Industrial environments
- Mounting heights up to 30 feet. It is listed for wet locations and IP65 rated to help protect against dust, and airborne contaminants from indoor and outdoor environments
- The removeable quick-disconnect driver housing that allows for easy field replacement of the LED driver, eliminating the need to replace the entire fixture

Catalog Number	UPC	Description	Replaces up to	Lumens	Input Watts	CCT	Voltage	Distribution	Pallet Qty.
JEBL 12L 40K 80CRI WH	00191848153840	JEBL LED High Bay	4-lamp T5HO, 6-lamp T8	13,286	92W	4000K	120-277	General	54
JEBL 12L 50K 80CRI WH	00191848153901	JEBL LED High Bay	4-lamp T5HO, 6-lamp T8	13,190	92W	5000K	120-277	General	54
JEBL 18L 40K 80CRI WH	00191848153895	JEBL LED High Bay	6-lamp T5HO, 8-lamp T8, 400W HID	19,680	136W	4000K	120-277	General	54
JEBL 18L 50K 80CRI WH	00191848153888	JEBL LED High Bay	6-lamp T5HO, 8-lamp T8, 400W HID	19,770	136W	5000K	120-277	General	54
JEBL 24L 40K 80CRI WH	00191848153918	JEBL LED High Bay	6-lamp T5HO, 8-lamp T8, 400W HID	26,559	181W	4000K	120-277	General	42
JEBL 24L 50K 80CRI WH	00191848153956	JEBL LED High Bay	6-lamp T5HO, 8-lamp T8, 400W HID	26,189	181W	5000K	120-277	General	42
JEBL 30L 40K 80CRI WH	00191848153925	JEBL LED High Bay	10-lamp T5HO, 575W HID	31,423	218W	4000K	120-277	General	42
JEBL 30L 50K 80CRI WH	00191848153932	JEBL LED High Bay	10-lamp T5HO, 575W HID	32,824	218W	5000K	120-277	General	42
JEBL 18L HVOLT 40K 80CRI WH	00193047073745	JEBL LED High Bay	6-lamp T5HO, 8-lamp T8, 400W HID	19,680	136W	4000K	347-480	General	54
JEBL 18L HVOLT 50K 80CRI WH	00193047073721	JEBL LED High Bay	6-lamp T5HO, 8-lamp T8, 400W HID	19,770	136W	5000K	347-480	General	54
JEBL 24L HVOLT 40K 80CRI WH	00193047073769	JEBL LED High Bay	6-lamp T5HO, 8-lamp T8, 400W HID	26,559	181W	4000K	347-480	General	42
JEBL 24L HVOLT 50K 80CRI WH	00193047073783	JEBL LED High Bay	6-lamp T5HO, 8-lamp T8, 400W HID	26,189	181W	5000K	347-480	General	42
JEBL 30L HVOLT 40K 80CRI WH	00193047073806	JEBL LED High Bay	10-lamp T5HO, 575W HID	31,423	218W	4000K	347-480	General	42
JEBL 30L HVOLT 50K 80CRI WH	00193047073837	JEBL LED High Bay	10-lamp T5HO, 575W HID	32,824	218W	5000K	347-480	General	42

Accessories next page

Specifications

INTENDED USE:

The Lithonia Lighting JEBL LED High bay is an affordable LED solution for users who prefer a luminaire with the look and feel of a round form factor. The JEBL delivers comfortable and uniform lighting from mounting heights up to 30ft. **Certain airborne contaminants can diminish integrity of acrylic. Click here for Acrylic Environmental Compatibility table for suitable uses.**

Certain airborne contaminants may adversely affect the functioning of LEDs and other electronic components, depending on various factors such as concentrations of the contaminants, ventilation, and temperature at the end-user location. **Click here for a list of substances that may not be suitable for interaction with LEDs and other electronic components.**

CONSTRUCTION:

JEBL features a white die-cast aluminum housing along with a removable die-cast aluminum driver housing. Optional clear polycarbonate or diffuse aluminum reflectors available separately.

OPTICS:

A .16" thick clear tempered glass lens protects LEDs. Placement, spacing, and aperture of LEDs provides a 120 degree spread of light.

ELECTRICAL:

High-efficiency LEDs. 0-10V dimming standard for a dimming range of 100% to 10%.

Input voltage is MVOLT (120-277V) and HVOLT (347-480V). Suitable for 50/60Hz. Luminaire Surge Protection Level: Designed to withstand up to 6kV/3kA per ANSI C82.77-5-2015.

L90 > 54,000 hours.

CONTROLS:

Sensors may be field installed utilizing the wiring box accessory that is attached to the top of the fixture in the field. Recommended Acuity Brands sensors: SBOR, rSBOR, XPA SBOR, and XPA CMRB.

INSTALLATION:

1/4" NPT eye bolt with 1/2" thick loop and 6' cord with dimming lead provided for easy installation. 3/4" reducer available for stem or hook mounting. Optional surface mount bracket allows flexibility by adjusting in 15 degree increments for a total range of 150 degrees. Also capable of accepting 3/4" stem or hook. Recommended hooks include HKMG and HKF.

LISTINGS:

CSA certified to US and Canadian safety standards. Wet location listed. For use under covered ceilings. For use in ambient temperatures from -40°F (-40°C) to 131°F (55°C). IP65 rated. Certified to meet NSF Splash Zone 2. NEMA 4X rated.

DesignLights Consortium® (DLC) Premium qualified product.

WARRANTY:

5-year limited warranty. Complete warranty terms located at:
www.acuitybrands.com/support/customer-support/terms-and-conditions

Note: Actual performance may differ as a result of end-user environment and application. All values are design or typical values, measured under laboratory conditions at 25 °C. Specifications subject to change without notice.

Dimensions

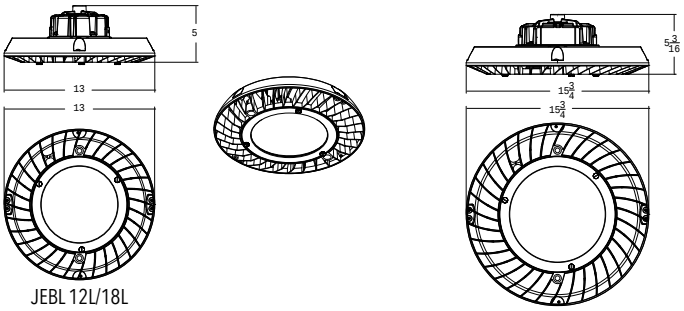

JEBL 12L/18L

JEBL 24L/30L

All dimensions are inches (centimeters) unless otherwise indicated.

Accessories: *Order as separate catalog number.*

JEBLPCLR1 M4	Polycarbonate clear reflector for 12L and 18L
JEBLDALR1 M4	Diffuse Aluminum reflector for 12L and 18L
JEBLPCLR2 M4	Polycarbonate clear reflector for 24L and 30L
JEBLDALR2 M4	Diffuse Aluminum reflector for 24L and 30L
JEBLMTG ADAPTER M12	3/4" reducer
JEBLSMB1 M6	Surface mount bracket for 12L and 18L
JEBLSMB2 M6	Surface mount bracket for 24L and 30L
JCBLSC120	Safety cable 120"
JCBLSC240	Safety cable 240"
JEBLWBK18 M6	Wiring box kit for sensor attachment for use with 12L/18L fixtures
JEBLWBK M6	Wiring box kit for sensor attachment for use with 24L and 30L fixtures
JEBLWG1 M6	Lens wireguard for 12L and 18L [1]
JEBLWG2 M6	Lens wireguard for 24L and 30L [1]
HKF	Female aluminum hook
HKMG	Male grommeted aluminum hook

NOTES

1. Compatible with optional reflectors.

JEBLPCLR

JEBLSMB

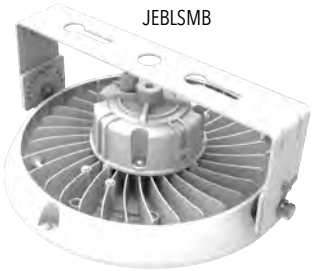

JEBLDALR

JEBLMTG Adapter

HYLITE™ LED Lighting

LED OMNI-BULB™

Ideal for High-quality Illumination in:

- Down Lights
- Decorative Lighting
- Pendant Lights
- Stairwell Lighting
- Wall Scones
- Accent Lighting
- Walkway Lighting
- Corridor Lighting
- Wall Packs
- Ceiling Lights
- Task Lighting
- Carriage Lanterns

18W / 26W CFL Equivalent

High Performance 8W LED Omni-Bulb

AC Direct | **Type B**

The HyLite High Performance LED Omni-Bulb is an ideal Energy-Efficient replacement for CFL & Incandescent Bulb installations in Existing & New Fixtures. The 8W HyLite LED Omni-Bulb provides 360° Energy-Efficient Illumination and replaces 18W/26W CFL Bulbs, effectively reducing Energy Consumption by 56%-69%, and as much as 89% when replacing 75W Incandescent Bulbs. HyLite LED Omni-Bulbs are rated up to 50,000 hours of Lamp Life. This is 50 times longer than a traditional Incandescent Bulb, and 7 times longer than a CFL Bulb. This significantly reduces Energy Usage and Costs as well as Maintenance Expenditures.

- Easy Installation & Retrofitting: Simply Bypass Ballast and Plug-in. Runs on AC Direct Line Voltage. Eliminates Compatibility, Power Loss & Lifetime Issues and Maintenance Costs associated with Ballasts
- Full Brightness with Instant On and Instant Restrike
- Optimal Design for Horizontal or Vertical Mount Sockets
- >80 CRI for Great Visibility
- Suitable for Dry or Damp Location
- Universal Voltage: 100-277V, AC
- Heat & Impact Resistant, UV Protected, Non-Yellowing, Optical Grade Lens
- Excellent Heat Dissipation with Proprietary-Designed Heat Sink
- Cool Operation: Does not add to Heat Load (up to 90% less heat than Incandescent) while producing Brilliantly Bright Light
- Non-Combustible. Made from Flame Retardant, Engineered Polymer, the Base is Mechanically Strong and Heat-Resistant up to 435°F (225°C)
- Safe and Reliable: Isolated Circuit Design
- Maintenance-Free Operation: Lasts up to 50 times longer than Incandescent Bulb. Lowers Costs by Reducing Relamp Frequency
- Safe: Contain No Hazardous Materials; RoHS Compliant: No Lead, Mercury, Toxic Metals or Arsenic Gases. No Disposal Requirements. Facilitates LEED® points
- No Electro-Magnetic (EMi) or Radio Frequency Interference (RFi)
- Environmentally Friendly: 98% of the HyLite LED Lamp is Recyclable

Not Suitable for Enclosed Fixtures

CLASSIFIED c UL us E361357 | FC | CE | Pb lead-free | RoHS 2002/95/EC

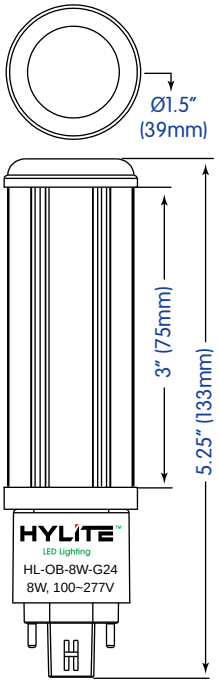

HyLite LED Omni-Bulbs offer a truly universal G24 base - designed to replace both 2-pin and 4-pin G24 bases listed below:

G24d	G24q	Gx24d	Gx24q
G24d-1	G24q-1	Gx24d-2	Gx24q-1
G24d-2	G24q-2	Gx24d-3	Gx24q-2
G24d-3	G24q-3		Gx24q-3
			Gx24q-4

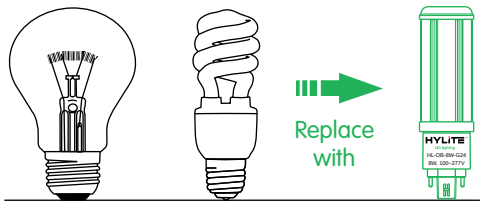

Incandescent	CFL	HyLite
75W	18W / 26W	8W
89%	56%-69%	Energy Savings (%)

98% RECYCLABLE

NO LEAD, MERCURY, HEAVY METALS OR TOXIC GASES

Universal Burning Positioning

Lamp can be oriented in any position - does not affect or diminish the life of the lamp

Longer Life	Energy Costs	Power	Beam Angle	Lumen Efficacy	No IR/UV No Noise	No EMi / RFi	Solid State	Reliability	Warranty
Up to 50,000 Hours	kW							✓OK ON OFF × 1.000.000	5 years
Increased Sustainability	Reduction of up to 89%	Low Consumption	360° Illumination	Up to 110 LpW LM-79 Tested	Radiation-Free No Humming	Zero Interference	Vibration and Shock Resistant	LM-80 Tested ISTMT Tested	Reliable and Long-Lasting

HYLITE™
LED Lighting

LED
OMNI-BULB™
AC Direct | Type B

As part of the company's continuous product improvement program, HyLite reserves the right to change materials or modify the design of its product without notification. All Specifications subject to change without notice. All values are design and/or typical values when measured under laboratory conditions. Actual Values depend upon the ambient temperature of the installation location. Please consult factory for your specific requirements.

Model No.	Watts	Delivered Lumens	Input Line Current	Dimensions and Weight (each)		
				Width	Height	Net Weight
HL-OB-8W-G24	8	898	65mA@120V	1.5" (39mm)	5.25" (133mm)	3.5 oz. (100g)

- Efficacy: 110 LpW
- CRI: >80
- Beam Angle: 360°
- THD (%): <7%
- Universal Input Voltage 100~277V, AC 50/60 Hz.
- Power Factor: >0.98
- Protection: IP20
- Rated Life: 50,000 Hrs.*
- Warranty: 5 Years
- Base Type: G24
- Ambient Working Temperature: -4°F~+104°F (-20°C~+40°C)
- CCT: 3500K (Neutral White), 4000K (Cool White) and 5000K (DayLight)

** Depending upon the ambient temperature of the installation location*

WARNING
Not Suitable for Totally Enclosed Luminaires or Fully Enclosed Fixtures

HyLite Omni-Bulb, HL-OB-8W-G24
Photometrics

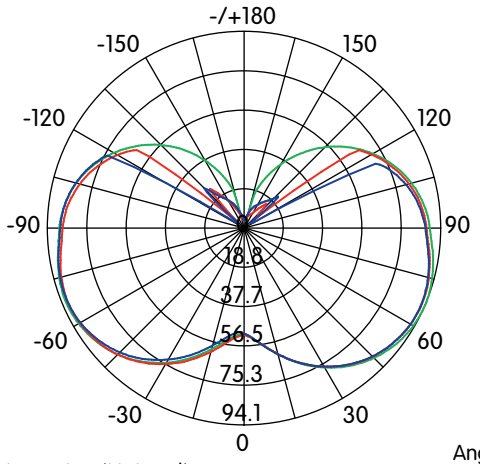

Intensity: (Unit, cd)

	Angle [50% Max.]	[10% Max]
C180/360	283.5°	329.6°
C0/180	253.7°	306.6°
C90/270	237.3°	322.0°

HYLITE™
LED Lighting

Illuminance Distance Curve

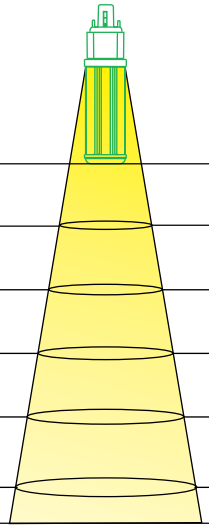

Height	Center E (lx/fc)	Diameter
1 m	50.54 lx	3.06 m
3.3 ft.	4.7 fc	10 ft.
2 m	12.63 lx	6.11 m
6.5 ft.	1.17 fc	20 ft.
3 m	5.62 lx	9.16 m
9.8 ft.	0.52 fc	30 ft.
4 m	3.16 lx	12.22 m
13.1 ft.	0.29 fc	40 ft.
5 m	2.02 lx	15.27 m
16.4 ft.	0.19 fc	50 ft.

Angle: 283.50°

Note: The Curves indicate the illuminated area and the average illumination when the luminaire is at different distance

Ordering for HyLite 8W LED Omni-Bulb with G24 Base

Model / Base	Nominal Color Temperature (CCT, °K)	
HL-OB-8W-G24	-35K	3500K = Neutral White (NW)
	-40K	4000K = Cool White (CW)
	-50K	5000K = DayLight (DL)

Warning: Disable all Power to the Luminaire. HyLite LED Omni-Bulbs are designed to work off 100V~277V, AC. HyLite 8W LED Omni-Bulbs are not compatible with Electronic Ballasts. Electronic Ballast (if equipped) must be Bypassed or removed from the Luminaire before installing the Lamp. Failure to Follow Instructions will VOID Warranty. It can also result in an Electric Shock, or Fire. NOT FOR TOTALLY ENCLOSED LUMINAIRES OR EMERGENCY LIGHTING. NOT FOR USE WITH DIMMERS.

Warning – Risk of Fire or Electric Shock

- For use in Dry or Damp Locations. Do not use where directly exposed to Liquid, Vapor, Rain or Weather. Non-Submergible (not water tight).
- Operate in Fixtures that provide the free flow of air around the Lamp. This will ensure Lumen Maintenance and Extend Its Working Life. When Products are used in Outdoor Fixtures, ensure the space is Waterproof and Well-Ventilated.
- The Installer must determine and verify whether 120V to 277V AC is being utilized at the Luminaire before Installation. Improper Voltage matching can result in Performance Degradation and/or Physical Damage. These Lamps work on Line Voltage and require all Ballasts and Starters to be Bypassed.
- Wiring modification for HyLite LED Lamp Installation requires knowledge of Luminaire Electrical Systems. If not qualified, DO NOT attempt Installation. Contact a Qualified Electrician.
- Luminaire Wiring, Ballast, or other Electrical Parts may be Damaged when Installing. Always check for enclosed Wiring and Components.
- To prevent Wiring Damage or Abrasion, DO NOT expose Wiring to edges of Sheet Metal or other Sharp Objects.
- DO NOT Make or Alter any Open Holes in an Enclosure for Wiring or Electrical Components during Installation.
- DO NOT Block Light emanating from Product in Whole or Part, as this may Cause an Unsafe Condition.
- Installing Surge/Lightning Protectors is Highly Recommended and helps to Eliminate Premature Driver Failure caused by Surges and other Power Fluctuations.
- The End Retrofit Fixture, once Modified, can No Longer Operate as was Originally Intended.

© 2016-2018 HyLite LED, LLC., USA

VANLED52NFFRW

RAB

Low-profile vandal-resistant fixture covers the footprint of most traditional canopy lights. Available in flat or drop lens with frosted and unfrosted options.

Color: White

Weight: 10.3 lbs

Project:

Type:

Prepared By:

Date:

Driver Info

Type	Constant Current
120V	0.47A
208V	0.28A
240V	0.24A
277V	0.21A
Input Watts	56.20W
Efficiency	93%

LED Info

Watts	52.00W
Color Temp	4000K (Neutral)
Color Accuracy	83 CRI
L70 Lifespan	100,000
Lumens	6,623
Efficacy	117.8 LPW

Technical Specifications

Listings

UL Listed:

Suitable for Wet Locations. Covered Ceiling Mount Only.

IESNA LM-79 & LM-80 Testing:

RAB LED luminaires and LED components have been tested by an independent laboratory in accordance with IESNA LM-79 and LM-80.

DLC Listed:

This product is on the Design Lights Consortium (DLC) Qualified Products List and is eligible for rebates from DLC Member Utilities. DLC Product Code: PSITUSTM

LED Characteristics

LEDs:

Long-life, high-efficacy surface-mount LEDs

Color Stability:

RAB LEDs exceed industry standards for chromatic stability

Color Uniformity:

RAB's range of CCT (Correlated Color Temperature) follows the guidelines of the American National Standard for Specifications for the Chromaticity of Solid State Lighting (SSL) Products, ANSI C78.377-2017.

Construction

Maximum Ambient Temperature:

Suitable for use in 40°C (104°F)

Cold Weather Starting:

Minimum starting temperature is -40°C (-40°F)

Lens:

Vandal-resistant polycarbonate textured opaque for low glare frosted flat lens

Housing:

Die-cast aluminum housing and lens frame with (4) 1/2" NPS side conduit entries and weatherproof rear wire plug and access plate

Mounting:

Ceiling mount to recessed junction with knockout template or directy to ceiling surface, utilizing side conduit entry points

IP Rating:

Ingress Protection rating of IP66 for dust and water

Air Tight:

Housing certified Air Tight as per ASTM E283

Finish:

Our environmentally friendly polyester powder coatings are formulated for high-durability and long-lasting color

Other

Warranty:

RAB warrants that our LED products will be free from defects in materials and workmanship for a period of five (5) years from the date of delivery to the end user, including coverage of light output, color stability, driver performance and fixture finish. RAB's warranty is subject to all terms and conditions found at rablighting.com/warranty.

Buy American Act Compliance:

RAB values USA manufacturing! Upon request, RAB may be able to manufacture this product to be compliant with the Buy American Act (BAA). Please contact customer service to request a quote for the product to be made BAA compliant.

Electrical

Driver:

Class 2, Constant Current, 120-277V, 50-60Hz, 120V: 0.47A, 208V: 0.28A, 240V: 0.24A, 277V: 0.21A

THD:

8.26% at 120V, 7.26% at 277V

Power Factor:

99.8% at 120V, 94.9% at 277V

Copyright © 2019 RAB Lighting All Rights Reserved Note: Specifications are subject to change at any time without notice

VANLED52NFFRW

Dimensions

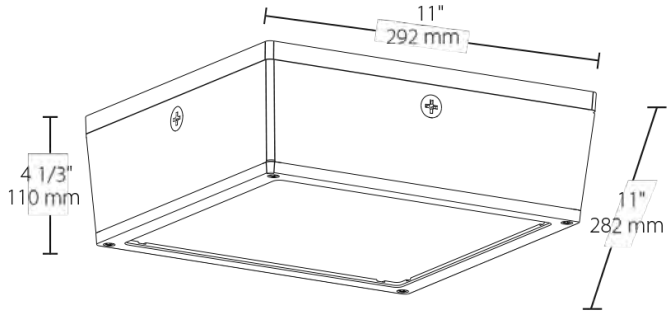

Features

- Fits the footprint of older canopy lights
- Vandal resistant and UV resistant lens
- Ultra-high efficiency
- Clean, contemporary, low-profile design
- Available with drop lens or flat lens
- IP66 rated, keeps dust, bugs and water out
- Photo and motion sensor options available

Ordering Matrix

Family	Wattage	Color Temp	Lens-Optics	Finish	Voltage	Options	Suffix
VANLED	52	N	FFR	W			
	10 = 10W **20 =** 20W **28 =** 28W **40 =** 40W **52 =** 52W **65 =** 65W **75 =** 75W	**Blank =** 5000K (Cool) **N =** 4000K (Neutral) **Y =** 3000K (Warm)	**Blank =** Drop lens **F =** Flat lens [1] **FR =** Frosted Drop Lens **FFR =** Frosted Flat Lens [1]	**Blank =** Bronze **W =** White	**Blank =** 120-277V, 0-10V Dim Standard **/480 =** 480V, 0-10V Dim Standard	**Blank =** No Options **/MVS =** Microwave Sensor [1] **/WS =** Wattstopper, 8ft **/WS2 =** Wattstopper, 20ft **/PCS =** 120V Swivel Photocell **/PCS2 =** 277V Swivel Photocell **/PCS4 =** 480V Swivel Photocell **/LC =** Lightcloud® Control factory Installed **/E2 =** Emergency Battery, 120-277V only	**Blank =** Standard **USA =** Complies with the BAA

[1] /MVS option not available with F and FFR lens

Copyright © 2019 RAB Lighting All Rights Reserved Note: Specifications are subject to change at any time without notice

NEW
No neutral dual-tech

Dual-technology Maestro® Sensors

Superior in-wall sensors featuring Lutron XCT™ sensing technology

Sensor switch

Dual-circuit sensor switch

Helps meet building codes

- Title 24 2013
- ASHRAE 90.1 2010
- IECC 2012

- **XCT sensing technology with cross-correlation**
  - Enhanced ultrasonic and passive infrared (PIR) technology in the Maestro sensor keeps lights on and reduces false ons
  - Best of both technologies – no callbacks
- **Durable design with modern, clean aesthetic**
  - Tamper-resistant lens
  - 30+ year switch lifetime
  - Available in 27 colors
- **Ideal for retrofit — no neutral required**

View our sensor videos:

For more information:
www.lutron.com/OccVacSensors

Order now:
Contact your local electrical distributor

LUTRON®

Lutron dual-technology Maestro® sensors minimize callbacks

XCT™ technology with cross-correlation — won't leave you in the dark

Lutron XCT technology can recognize the difference between fine human motion and background noise.

☑ Very Fine Motion

Minimal movements like typing on a keyboard

☑ Fine Motion

Small movements like flipping pages of a book

☑ Minor Motion

Movements like extending your arm

☑ Major Motion

Person walking 3 feet

NEW!

XCT technology now available for dual-technology sensors.
Dual-technology sensors use PIR and ultrasonic technologies together for maximum sensitivity.

Lutron sensors are engineered with robust components, and combined with award-winning aesthetics

Available in 27 colors

30+ year switch lifetime (250,000 on/off switch cycles)

Tamper-resistant lens

Gloss colors:

- White (WH)
- Ivory (IV)
- Almond (AL)
- Light Almond (LA)
- Gray (GR)
- Brown (BR)
- Black (BL)

Satin Colors®:

- Hot (HT)
- Merlot (MR)
- Plum (PL)
- Turquoise (TQ)
- Sea Glass (SG)
- Midnight (MN)
- Sienna (SI)
- Terracotta (TC)
- Greenbriar (GB)
- Bluestone (BG)
- Taupe (TP)
- Eggshell (ES)
- Biscuit (BI)
- Snow (SW)
- Palladium (PD)
- Mocha Stone (MS)
- Goldstone (GS)
- Desert Stone (DS)
- Stone (ST)
- Limestone (LS)

Dual-technology Maestro® sensor product information

Mistake-proof wiring

NEW **No neutral required model**

- Installs fast — versions with or without neutral wire
- No polarity for line or load wiring
- Any voltage — 120-277V, any phase or mixed phases — A, B, or C
- For 3-way control with an existing switch, use neutral-required model

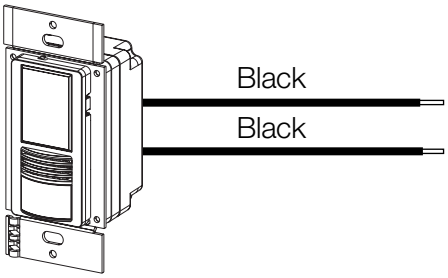

Sensor switch

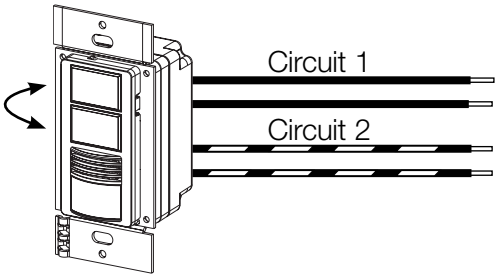

Dual-circuit sensor switch

Easily reassign circuits
Change circuits with a simple button press—no rewiring required

Easy set up

- Independent setting per circuit
- Easy to see LEDs indicate settings
- No dip switches or dials
- Simple button press to change settings
  - Timeout
  - Sensitivity (ultrasonic)
  - Sensitivity (PIR)
  - Mode
    - Occupancy
    - Ambient light detection (learning)
    - Ambient light detection (fixed)
    - Vacancy

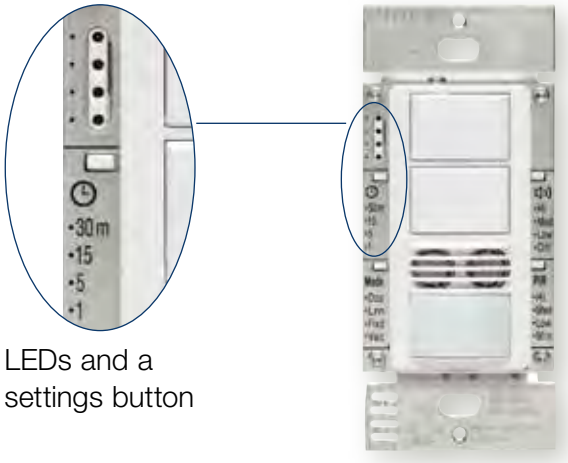

LEDs and a settings button

Controls all lighting and fan loads

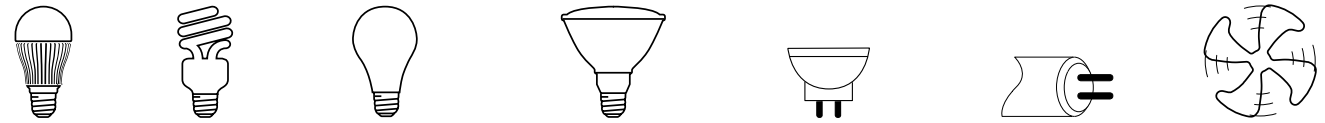

LED | CFL | Incandescent/ halogen | Magnetic low voltage | Electronic low voltage | Fluorescent | Fan

120V to 277V, 6A

4.4A (120V only)

All Lutron products backed by world-class support

- 24/7 live technical support 1.800.523.9466
- Customer service/quotes 1.888.588.7661

Ordering information
Dual-technology Maestro® occupancy/vacancy sensors

Models	Model number	Specifications	Voltage
No neutral required (shipping 7/1/14)			
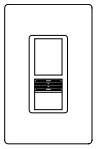	MS-A102-XX[1,2]	Single pole Single-circuit model 6 A lighting 4.4 A fan (120 V only)	**120-277 V~**
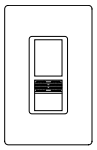	MS-A202-XX[1]	Single pole Dual-circuit model 6 A lighting per circuit 4.4 A fan (120 V only) per circuit	**120-277 V~**
Neutral required			
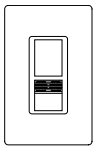	MS-B102-XX[1,2]	Single pole/multi-location[3] Single-circuit model 6 A lighting 4.4 A fan (120 V only)	**120-277 V~**
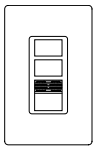	MS-B202-XX[1]	Single pole/3-way Dual-circuit model 6 A lighting per circuit 4.4 A fan (120 V only) per circuit	**120-277 V~**

[1] XX denotes color suffix (above)
[2] Vacancy-only models available
[3] Multi-location switches work with up to nine companion switches

Additional Lutron sensors

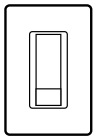
Maestro PIR single-circuit sensors

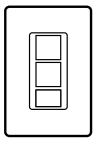
Maestro PIR dual-circuit sensors

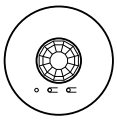
Radio Powr Savr™ wireless sensors

Code information

Sensors help meet stringent code requirements

- ASHRAE 90.1-2010, Title 24 2013, and IECC 2012
  - Meets automatic shutoff
  - Meets multi-level lighting controls requirement (dual-circuit model)
- For more information, visit www.lutron.com/energycodes

www.lutron.com/OccVacSensors
World Headquarters 1.610.282.3800
Technical Support Center 1.800.523.9466 (Available 24/7)
Customer Service 1.888.588.7661

save energy with Lutron™ ®

LUTRON®

© 03/2014 Lutron Electronics Co., Inc. | P/N 367-2458 REV B

369652b 1 05.04.12

Dual Technology Ceiling Mount Sensor

The ULOS-CDT Series ceiling-mount dual-technology sensors can integrate into Lutron systems or function as stand-alone controls using a Lutron power pack. The technology eliminates manual sensitivity and timer adjustments during installation and over the life of the product.

Features

- Intelligent, continually adapting sensor
- Ultrasonic (US) combined with passive infrared (PIR) sensing provide high sensitivity, high noise immunity, and excellent false tripping immunity
- Suited for complex environments that are difficult to control with single-technology sensors
- Snap-locks to ceiling-mounted cover plate
- Non-Volatile Memory: settings saved in protected memory are not lost during power outages
- 500 to 2000 sq ft (46 to 186 m^2) coverage when mounted on an 8 - 12 ft (2.4 to 3.7 m) ceiling; 180° and 360° field of view
- Affords choice of turning lights off or dimming to a preset level in the unoccupied state when integrated with a Lutron system.
- Assembled in the USA.

Models Available

Cat. No.	Color	Coverage	Field of View
ULOS-CDT-500-WH	White	500 sq ft (46 m^2)	180°
ULOS-CDT-500R-WH	White	500 sq ft (46 m^2)	180°
ULOS-CDT-1000-WH	White	1000 sq ft (93 m^2)	180°
ULOS-CDT-1000R-WH	White	1000 sq ft (93 m^2)	180°
ULOS-CDT-2000-WH	White	2000 sq ft (186 m^2)	360°
ULOS-CDT-2000R-WH	White	2000 sq ft (186 m^2)	360°

Self-Adaptive Feature

The ULOS-CDT Series ceiling-mount occupant sensors combine both (US) motion detection for maximum sensitivity and passive infrared (PIR) motion detection for false triggering immunity. The self-adapting internal microprocessor analyzes the composite sum of both signals to eliminate time-consuming adjustments and callbacks found in non-intelligent sensors.

Job Name:	Model Numbers:
Job Number:	

Specifications

Timer Adjustment

- Automatic mode: Continually adapting sensor automatically adjusts settings to the space
- Manual mode: 8 to 30 minutes
- Test mode: 8 seconds

LED Lamp

- Red: infrared motion detected
- Green: ultrasonic motion detected

Housing

- Rugged, high-impact, injection-molded plastic
- Color-coded leads 6 in (15 cm)

Power

- Operating voltage: 20 - 24 V⎓, PELV (Class 2: USA) low-voltage
- Operating current: 33 mA nominal
- Control output: 20 - 24 V⎓ active high logic control signal with short-circuit protection, open collector when unoccupied

Operating Environment

- Temperature: 32 to 104 °F (0 to 40 °C)
- Relative humidity: less than 95%, non-condensing
- For indoor use only

Adaptive Functions

- Installation: 60 minutes
- Learning: 4 weeks for response to error conditions, air current adaptation, and timer optimization
- Post-learning occupancy periods
  - —24-hour circadian occupancy periods learned
  - —Weekly occupancy periods learned
- Adjustments in post-learning period
  - —Generally occupied periods (threshold = high-sensitivity mode)
  - —Generally unoccupied periods (threshold = miser mode)

Contact Rating (R Models only)

- SPDT 500 mA rated at 24 V⎓ isolated relay

Photo Cell (R Models only)

- Prevents light from turning on when there is sufficient natural light
- Sensitivity: 0 - 1000 LUX adjustable

Dimensions

Measurements are in inches (mm)

Front View

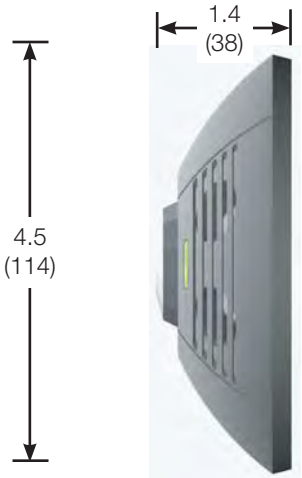

Side View

Job Name:	Model Numbers:
Job Number:	

Wiring

Note: Power pack may be required when interfaced to lighting control system; see below.

Single Sensor to System

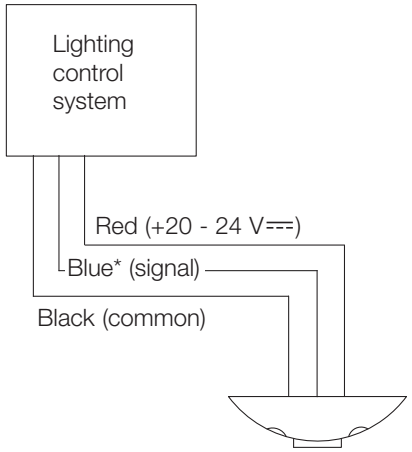

2 or More Sensors to System

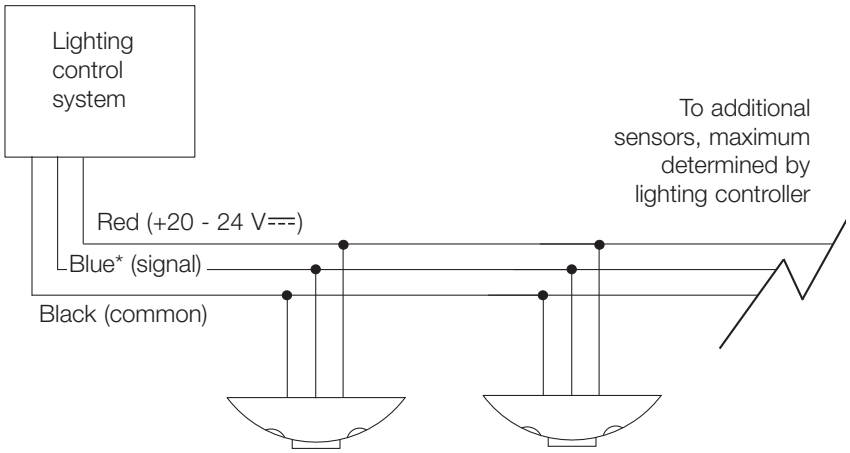

*Note: Use gray wire for -R model.

Power Supply Options

Lutron Lighting Control System	Power Pack Required?
Digital microWATT™	No
EcoSystem®	No
GRAFIK 5000 / 6000 / 7000™	No, when used with seeTouch® wallstations with occupant sensor connections.
GRAFIK Eye® 3000 / 4000	Yes
HomeWorks®	Yes
LCP128™	No, when used with seeTouch® wallstations with occupant sensor connections.
microWATT®	No
RadioRA®	Yes
RadioTouch®	No
Softswitch128®	No, when used with seeTouch® wallstations with occupant sensor connections.

NOTE: Power Pack may be required for more than one Occupant Sensor. Consult factory for multiple sensor requirements.

Job Name:	Model Numbers:
Job Number:	

Wiring: Stand-Alone Control

1 to 3 Sensors with Power Pack

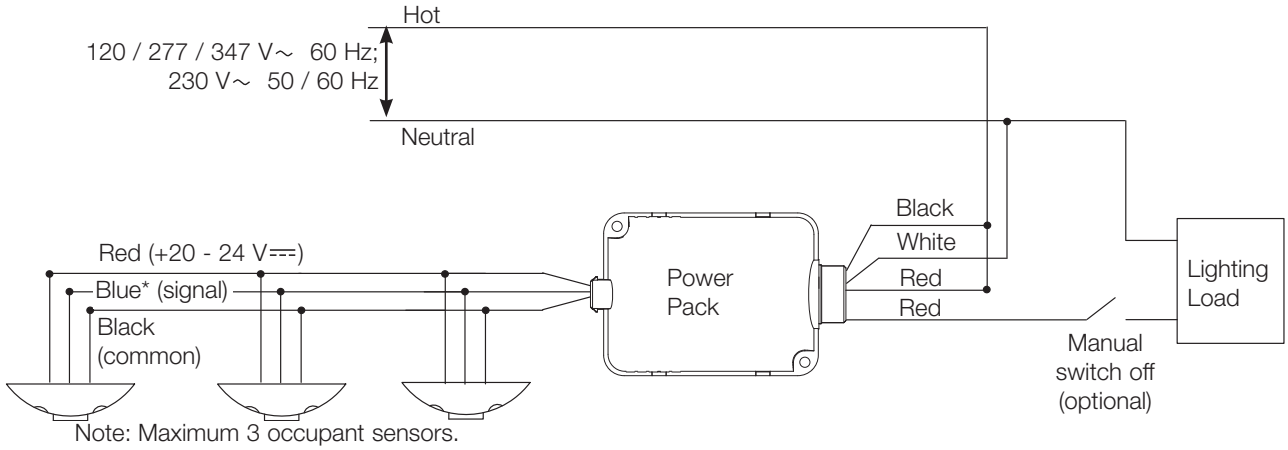

Switching Multiple Loads with Auxiliary Power Packs

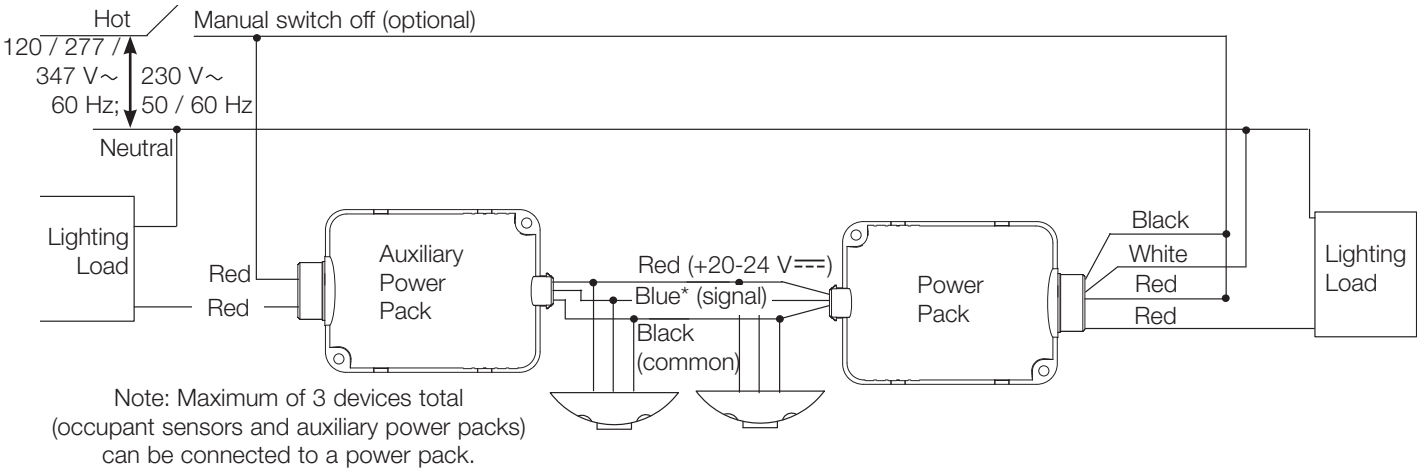

*Note: Use gray wire for -R model.

Job Name:	Model Numbers:
Job Number:	

Wiring

Relay Model Option

LOS-CDT-xxxxR only

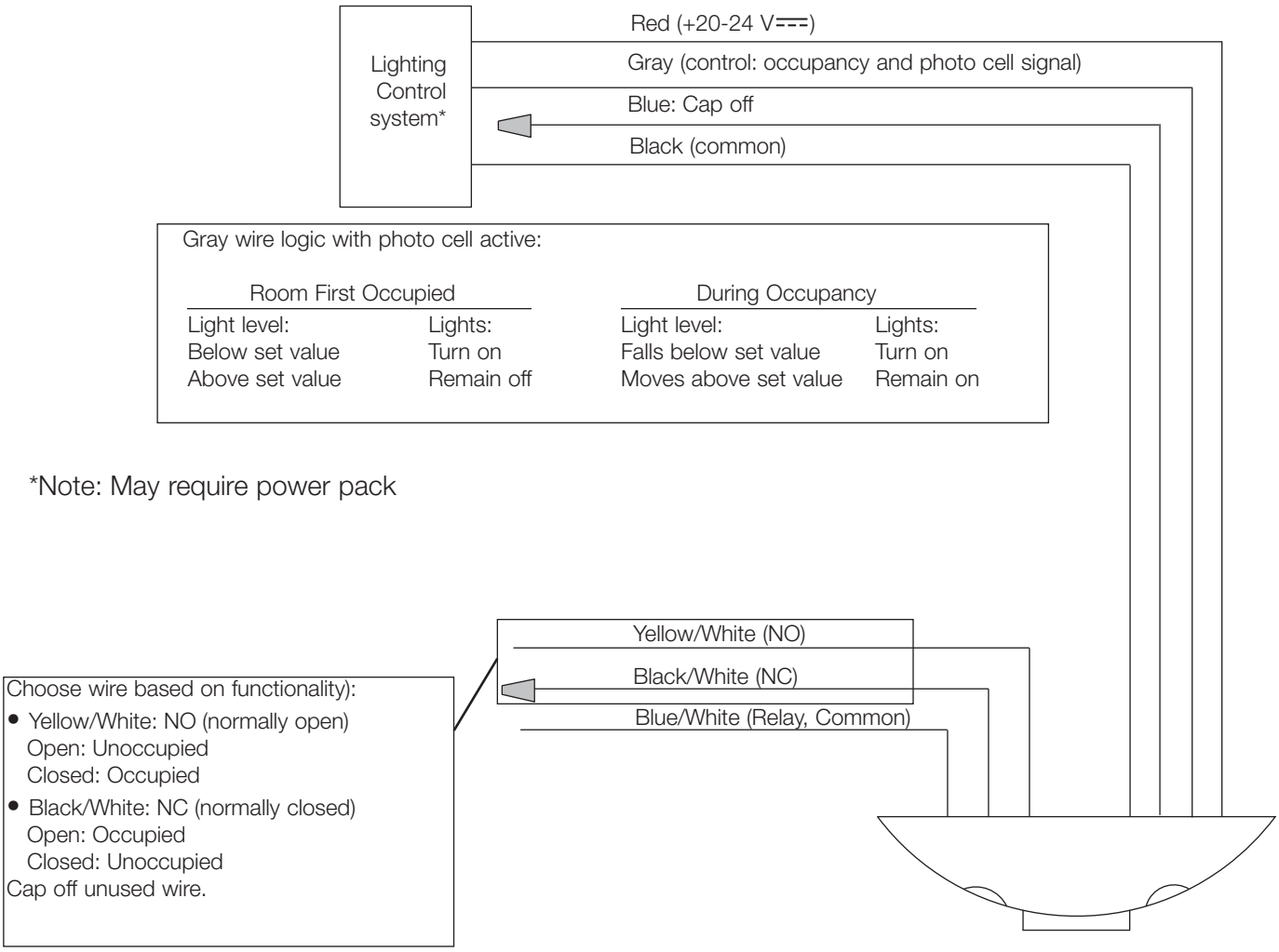

*Note: May require power pack

Job Name:	Model Numbers:
Job Number:	

Installation

Sensor Placement

- The occupant sensor must have an unobstructed view of the room. Do not mount behind or near tall cabinets, shelves, indirect hanging fixtures, etc.
- Do not place sensor within 6 ft (1.8 m) of air vents, air handlers, windows, fans, etc., as this may cause false triggering.
- If installing a 180° occupant sensor (500 and 1000 models), place the sensor on the same wall as the doorway so that traffic in a hallway will not affect the sensor; otherwise, place in center of room.
- Closely follow the diagrams shown concerning major and minor motion coverage. The sensor can detect major motion (such as a person taking a half-step) at a greater distance than it can detect minor motion (such as writing or typing at a desk).
- Decrease total coverage area by 15% for “soft” rooms (for example, heavy draperies or heavy carpeting).

Range Diagrams

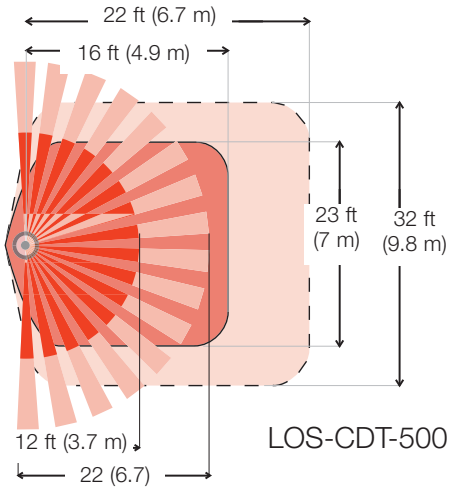

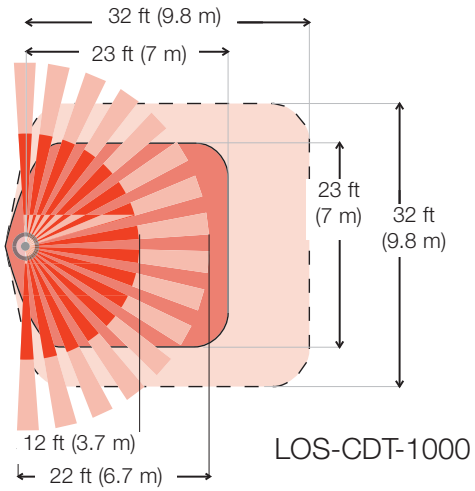

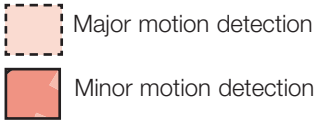

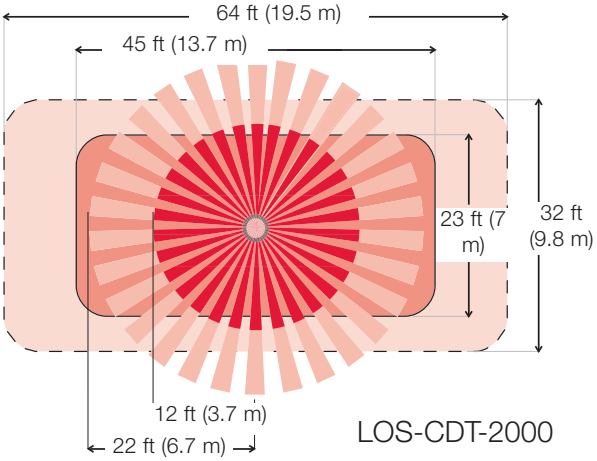

Job Name:	Model Numbers:
Job Number:	

Installation

Mounting

Normal Mounting
Twist and lock threaded mounting post onto cover plate. Drill through ceiling tile with assembly, using cutter end of the threaded mounting post. Secure with washer and nut.

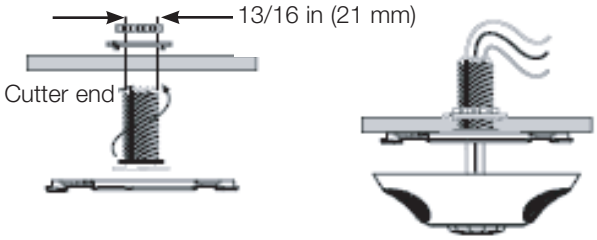

Mounting to Non-Standard Ceiling or Fixture
Mount twist-lock cover plate using mounting screws, nuts, and washers (included). Drill/punch wire routing hole through ceiling tile at center of cover plate.

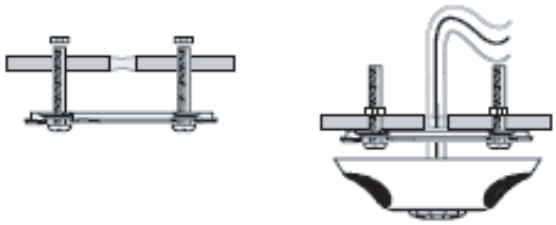

Wire Lengths

# Sensors	1	2	3	1	2	1
# Aux. PP	0	0	0	1	1	2
22 AWG	750 ft	375 ft	250 ft	375 ft	250 ft	250 ft
0.5 mm^2	365 m	180 m	120 m	90 m	120 m	120 m
20 AWG	1200 ft	600 ft	400 ft	600 ft	400 ft	400 ft
0.75 mm^2	730 m	365 m	240 m	365 m	240 m	365 m
18 AWG	2400 ft	1200 ft	800 ft	1200 ft	800 ft	800 ft

Mounting Plate Dimensions

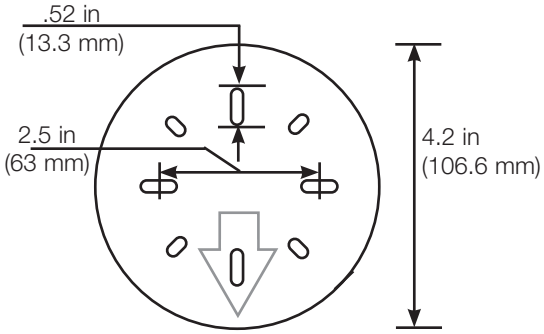

Using the Infrared Mask

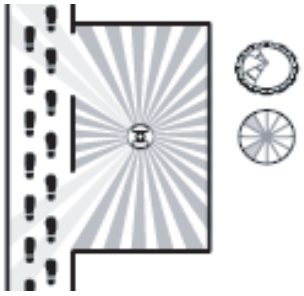

Center Ceiling Mount
(Mask blocks sensor seeing out doorway into hall)

Corner Ceiling Mount
(No mask needed)

Typical Mask Patterns

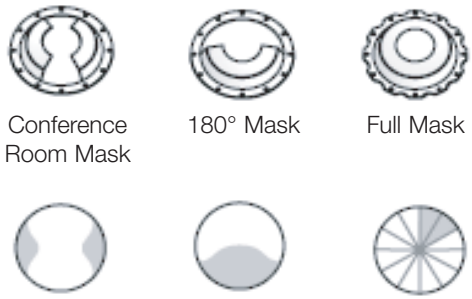

Conference Room Mask | 180° Mask | Full Mask

Rectangular Areas | Over the Door | Specific Areas You Wish to Mask

Job Name:	Model Numbers:
Job Number:	

Sensor Adjustments

Override Settings

A		Off (Default)	On
Auto/Manual	1	Automatic (Normal)	Manual on/off (Override)
Threshold	2	Auto Threshold Adjustment	High Sensitivity (Low turn-on threshold)
LED Motion Indicator	3	Lights indicate motion	Disable LED Indicator
Reset Learned Settings	4	Retain Settings (Normal)	Erase all learned settings, restart Learning (Toggle On)

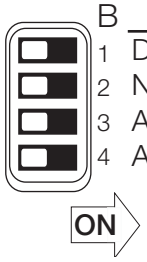

B		Off	On
Strong Airflow Compensation	1	Disable Compensation (Normal)	Enable Compensation
Over Doorway Installation	2	No (Normal)	Yes (Use increased turn-on threshold)
Timer Adjust	3	Adjust Timer Automatically	Use Manual Setting (No adjustment)
Auto Sensitivity	4	Adjust Sensitivity Automatically	Adjust Sensitivity Manually

Timer Test Mode

1. Remove the retainer cover.
2. Rotate the black timer adjustment knob to about midway (12 o'clock).
3. Return setting to minimum setting (full CCW).

Factory Settings 12 o'clock Full CCW

Note: The timer will remain in the 8-second test mode for 1 hour, then automatically reset to 8 minutes.

4. To manually take the timer out of the 8-second test mode, turn the timer adjustment approximately 1/16 in (1.5 mm) clockwise to make the setting slightly above minimum (just above the 8-minute setting).

Factory Settings

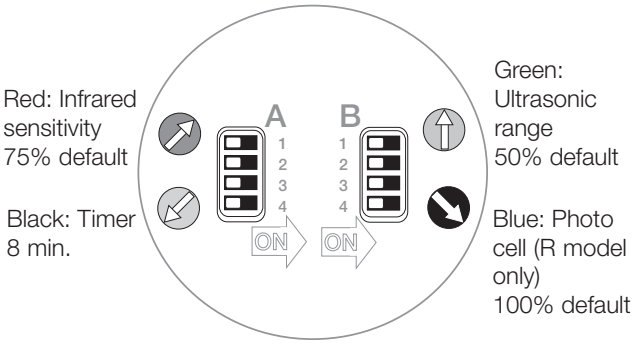

Job Name:	Model Numbers:
Job Number:	

Installation

Adjusting the “Lights Not On” Level

ULOS-CDT-xxxxR only

1. Place timer in Test Mode (see page 7).
2. Set photo cell to max.
   Turn the blue knob full clockwise (lights on no matter how bright the natural light is), then about 30 degrees counterclockwise.
3. Check for Lights-Out.
   Move from underneath the sensor, and remain still until the lights turn off. Move around normally to turn the light on.
4. Adjust to desired level.
   If lights remain off, adjust the blue knob another 30 degrees counterclockwise and repeat step 3 until the lights turn on.
   Note: Set blue knob to 100% to disable photo cell functionality and leave secondary dry contact closure output functionality intact.

Control Settings (Blue Knob)

ULOS-CDT-xxxxR only

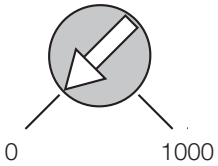

Minimum (low):
Lights will never come on, even though room is occupied.

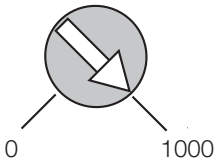

Maximum (high):
Photo cell has no effect on operation (factory setting).

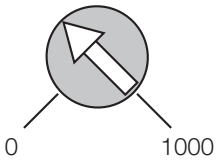

Normal:
200 to 600 LUX is normal range.

Job Name:	Model Numbers:
Job Number:	

PRODUCT CUT SHEETS

ECM-3.2 Steam Plant Upgrades
ECM 3.3 Hot Water Plant Upgrades

PITTSBURGH CORPORATE OFFICE
2016 BABCOCK BOULEVARD
PITTSBURGH, PA 15209
(412) 821-8900

COMBUSTION SERVICE & EQUIPMENT CO.®

EASTERN PA REGIONAL OFFICE
300 N. POTTSTOWN PIKE, STE 120
EXTON, PA 19341
(484) 873-3974

May 1, 2020

REVISION D

SUBJECT: **High Pressure Steam Fire Tube Boiler**
Hot Water Fire Tube Boilers
Deaerator
Water Softener System
Chemical Pump Unit

REFERENCE: **SCI HOUTZDALE**
GESA PROJECT
Houtzdale, PA

We propose to furnish the following equipment (revised for 4-pass boilers) for which we are the respective manufacturer's authorized trained representatives:

FIRE TUBE STEAM BOILER
(SB-1)

One (1) 350 H.P. Superior Super Seminole, 3-pass, wetback-packaged steam generator of the firetube Scotch Marine design. Generator to have minimum 1,767 sq. ft. of fireside heating surface and 150 psi ASME Section I steam construction. The generator output is 350 boiler horsepower or 12,075 PPH steam from and at 212°F.

The boiler shall incorporate the following special features:

- **Water column gauge glass.**
- **Primary float type low water cutoff.**
- **Siemens differential pressure transmitter and single loop controller for modulating boiler level controller with electric proportioning feedwater level control.**
- **Probe type auxiliary low water cutoff with manual reset and alarm.**
- **Shunt type push button switch around LWCO's for testing and blowdown.**
- **Probe type high water alarm.**

- **1" Electric modulating feedwater valve and 2" 3-valve bypass, factory mounted.**
- **2" 480 psig Feedwater globe & check valves, factory mounted.**
- **Operating, steam pressure and modulating pressure controls.**
- **6" Steam pressure gauge (0-300 psig) and test cock.**
- **5" Stack thermometer.**
- **Manual bottom blowdown valves, 1.5" 490 psig – 2 quick and 1 slow, factory mounted.**
- **One (1) ASME 6" x 4" x 30" length reducing spool piece, shipped loose.**
- **One (1) ASME 4" x 4" spool piece with ½" drain vale, shipped loose.**
- **One (1) 4" 250 psig steam angle-pattern stop check non-return valve, shipped loose.**
- **One (1) 4" 300 psig steam gate valve, shipped loose.**
- **Integral 24" stack damper.**
- **24" Flanged stack connection.**
- **ASME safety relief valves, set at 125 psig.**
- **NEMA 1 junction box, boiler mounted.**
- **Flue gas recirculation piping, factory installed (field insulation by others).**
- **All external boiler piping shall conform to the A.S.M.E. code, shall bear the PP stamp and shall be hydrostatically tested at the factory. This pertains to the water feed; blowoff and steam trim piping through the required valves.**
- **Skid jacking pads.**

One (1) Packaged Webster low NOx natural gas/#2 fuel oil power burner. Burner will be factory mounted and fitted with the following:

- **Fireye Nexus NXF4000 combustion controls to monitor and control all boiler/burner functions including flame safeguard functions and to include the following features/components:**
  - **UL/FM/CSD-1/NFPA85 controls and fuel trains.**
  - **13" HMI color touchscreen display and PLC.**
  - **Parallel positioning controls.**
  - **Fully modulating firing rate**

- **O_2 trim with probe.**
- **Solid state steam pressure transducer.**
- **Stack temperature RTD.**

- **High Turndown Firing (10:1 Gas / 8:1 #2 Oil)**
- **Gas train sized for 5 psi inlet natural gas pressure.**
  - ***Pilot gas train includes manual 3-way selector valve and regulator suitable for Propane gas (Propane bottle not in included and provided by others).***
- **Fuel oil train, factory mounted.**
- **Air atomizing compressor, boiler mounted and wired.**
- **Burner oil pump, boiler mounted and wired.**
- **Burner control panel, mounted on boiler.**
- **Burner blower motor VFD, mounted on boiler**
- **Factory fire tested.**
- **Low NOx burner head providing following emissions performance:**

  Less than 30 ppm NO_x at all firing rates on natural gas (corrected to 3% O_2).

  Less than 90 ppm NOx at all firing rates on #2 fuel oil (corrected to 3% O_2)

FIRE TUBE HOT WATER BOILERS (HWB-1, HWB-2)

Two (2) 350 H.P. Superior Super Seminole, 3-pass, wetback-packaged hot water boilers of the firetube Scotch Marine design. Boilers shall each have minimum 1,756 sq. ft. of fireside heating surface and 160 psi ASME Section I construction. Each boiler output is 350 boiler horsepower or 11,716 MBH.

Each boiler shall incorporate the following special features:

- **Primary probe type low water cutoff.**
- **Auxiliary probe-type low water cutoff with manual reset and alarm.**
- **2" 200 psig Drain Valve, factory mounted.**
- **Operating, steam pressure and modulating pressure controls.**

- **6" Water pressure gauge (0-300 psig).**
- **5" Water temperature gauge (50-300F).**
- **5" Stack thermometer.**
- **Integral 24" stack damper.**
- **24" Flanged stack connection.**
- **ASME safety relief valves, set at 125 psig.**
- **NEMA 1 junction box, boiler mounted.**
- **Flue gas recirculation piping, factory installed (field insulation by others).**
- **Skid jacking pads.**

Two (2) Packaged Webster low NOx natural gas/#2 fuel oil power burners. Burners will be factory mounted and fitted with the following:

- **Fireye Nexus NXF4000 combustion controls to monitor and control all boiler/burner functions including flame safeguard functions and to include the following features/components:**
  - **UL/FM/CSD-1/NFPA85 controls and fuel trains.**
  - **13" HMI color touchscreen display and PLC.**
  - **Parallel positioning controls.**
  - **Fully modulating firing rate**
  - **O_2 trim with probe.**
  - **Solid state steam pressure transducer.**
  - **Stack temperature RTD.**
- **High Turndown Firing (10:1 Gas / 8:1 #2 Oil)**
- **Gas train sized for 5 psi inlet natural gas pressure.**
  - ***Pilot gas train includes manual 3-way selector valve and regulator suitable for Propane gas (Propane bottle not in included and provided by others).***
- **Fuel oil train, factory mounted.**
- **Air atomizing compressor, boiler mounted and wired.**
- **Burner oil pump, boiler mounted and wired.**
- **Burner control panel, mounted on boiler.**

- **Burner blower motor VFD, mounted on boiler**
- **Factory fire tested.**
- **Low NOx burner head providing following emissions performance:**

  Less than 30 ppm NO_x at all firing rates on natural gas (corrected to 3% O_2).

  Less than 90 ppm NOx at all firing rates on #2 fuel oil (corrected to 3% O_2)

BOILER SEQUENCING CONTROL

The Fireye NXF4000 features integrated boiler sequencing control for the two new Superior boilers with Webster burners (detailed above) and the existing Cleaver Brooks (converted) hot water boiler with upgraded Fireye NXF4000 controls) control and monitoring of the hot water plant and monitoring only of the steam plant:

- **Designated "Master Boiler" will utilize it's 13" HMI color touchscreen panel**
- **BACnet (IP) communication protocol for ATC/BMS interfacing.**
- **Fault annunciation.**
- **Sequence hot water boilers to maintain loop set point temperature.**

Note: New Superior steam boiler and existing Kewanee steam boiler (with Fireye PPC4000 controls) would be displayed and points available to the ATC/BMS interface, but would not be controlled by the Nexus staging controllers.

DEAERATOR TANK (DE-1)

One (1) Shipco, or equal, pressurized internal spray/tray type deaerator rated at 20,000 Lbs/Hr.

Deaerator compartment shall be constructed of carbon steel, designed for 50 psig pressure in accordance with the latest revision of the A.S.M.E. Code, and shall be so stamped, with stainless steel 12"x16" manhole. Deaerator compartment has approximately 400 gallons storage.

The deaerator assembly is factory pre-assembled and mounted on a tank saddle, consisting of the following components:

Factory 2" insulation with painted steel jacket.

Conbraco 2" Inlet/3" Outlet Pressure Relief Valve set at 15 PSIG.

Manual vent valve.

Water level gauge glass assembly with shutoff cocks and protective rods to cover the full water level travel, on each chamber.

Vacuum breaker.

Stainless steel chemical quill with valve, surge chamber (for Sulfates only).

Sample valve, on DA chamber.

DA temperature transmitter.

Modulating water transfer and soft water make-up assemblies. The assemblies shall consist of a SLC PLC Controller, transmitter and valve, three-valve manual bypass and wye strainer. The capacity of the transfer valve shall be equal to 100% of the load with a 10 PSIG maximum drop across the valve. Transfer assembly will also send 4-20mAmp signals remotely as needed as well as alarms.

Three (3) Direct injection steam heating assemblies, 1", ¾" & ½", installed in the DA section, including regulating valves with steam pilots and stainless steel steam dispersion tubes for field installation by the contractor.

High pressure drips diffuser tube on Deaerator chamber.

2" Overflow trap/drainer.

High water and low water alarm points on each compartment.

Low water boiler feed and transfer pumps cutoff switches.

Two (2) VFD Pressure transducers, shipped loose for field installation by the Contractor in the common steam and boiler feedwater headers.

Structural steel skid base.

N.E.M.A. 12, UL Listed control cabinet complete with lockable main power disconnect switch, liquid tight conduit, 10" HMI/PLC, VFD controls for boiler feed pump operation, DA feed pump circuit breaker protection, fuse blocks, fused control transformer, control circuit disconnect, single point power connection for the deaerator boiler feed pumps, electric alternator for the boiler feed pumps, alarm bell and silencing circuit, pump selector switches, dry contact for remote alarm, signal lights, etc. PLC includes BACnet IP capability for interfacing to ATC/BMS.

Three (3) Gould vertical centrifugal boiler feed pumps, each mounted on a support base integral with tank support stand, driven by a 10 H.P., 460/3/60, 3500 rpm premium efficiency T.E.F.C. motor. Each pump is sized to deliver not less than 50 GPM of 230˚F water against a total discharge pressure of 320' TDH.

Three (3) Allen Bradley Power Flex 400 VFD's shall be supplied (one for each boiler feed pump), factory installed and wired, and controlled from the pressure transducers field installed in the common steam and feedwater header.

The skid shall include a factory manifolded discharge piping and suction piping for each boiler feed. The pumps and control panel shall be mounted on the structural steel skid.

WATER SOFTENER SYSTEM

One (1) Marlo Water Softener System designed to provide 35 gpm continuous flow, Model MAT270-M-1-1/2 TWIN, including:

Qty (2) 24" Diameter x 72" FRP Non-Code Pressure Vessels

ASME Code FRP Pressure Vessels, 150 psig Rating
9 ft^3 Softening Resin Per Vessel (270,000 grains Capacity Per Vessel)

Washed Gravel Sub-Fill for Media Support

1.5" Fleck Model 9500 Top-Mounted Control Valves for Automatic Operation

Pentair 'NXT' Microprocessor/Digital Display Controller

120/24 VAC, 60 Hz Electrical Power Rating

Qty (1) Fleck noryl inline turbine-type Flow Sensor(s) for Volume Initiated Regeneration

Qty (1) 30" x 50" Polyethylene Brine Storage Tank Assembly with Salt Shelf and Safety Overflow Valve

Water Hardness Testing Kit

CHEMICAL PUMP UNIT

One (1) Advantage Controls Chemical Pump unit, with the following:

50 gallon Polyethylene Chemical Tank

(1) Chemical Pump, ¼ hp, 115V/1/60

Agitator

SUPERIOR BOILER

BUILT TO OUTPERFORM

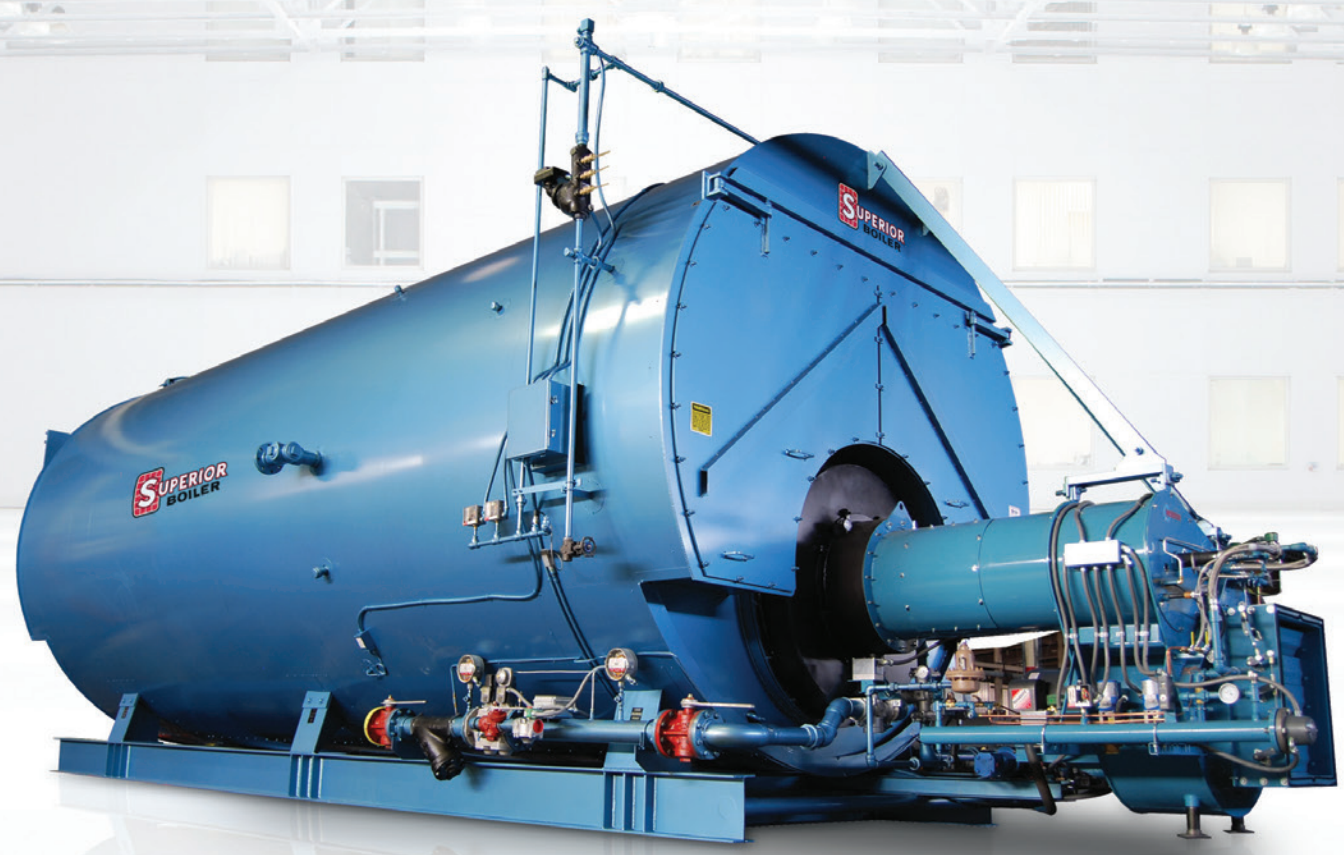

SUPER SEMINOLE

3-PASS WETBACK FIRETUBE BOILER

Designed for Maximum Efficiency, Reliability and Durability in Today's Most Demanding Environments.

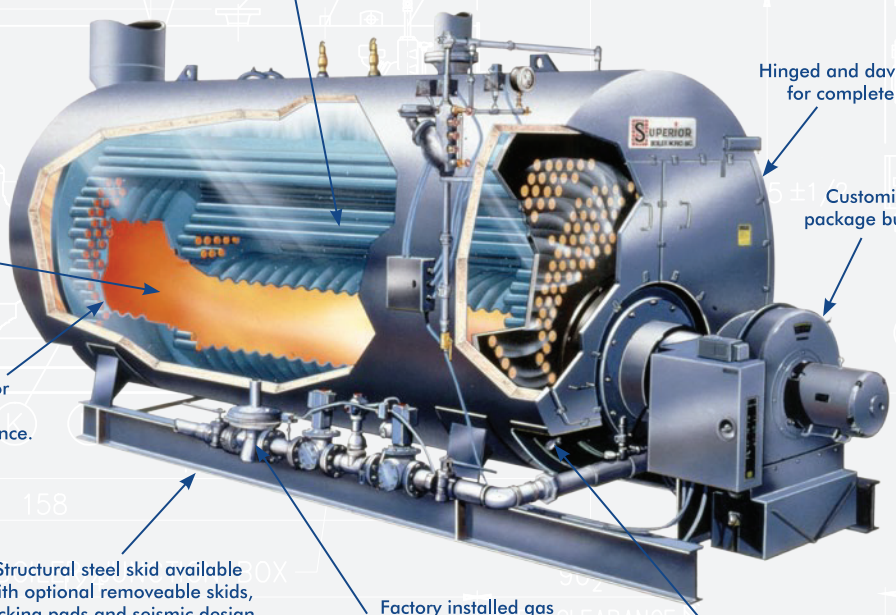

	70	80	100	125	150	200	250	300	350	400	500	600	700	750	800	900	1000
UNIT MODEL NUMBER	350	400	500	625	750	1000	1250	1500	1750	2000	2500	3000	3500	3750	4000	4500	5000
OUTPUT (MBH)	2343	2678	3348	4184	5021	6695	8369	10043	11716	13390	16378	20085	23433	25106	26780	30128	33475
STEAM (LBS/HR)	2415	2760	3450	4313	5175	6900	8625	10350	12075	13800	17250	20700	24150	25875	27600	31050	34500
INPUT GAS (1000 BTU/FT)	2929	3348	4184	5230	6276	8369	10461	12553	14645	16738	20922	25106	29291	31383	33475	37659	41844
INPUT #2 OIL (140,000 BTU/GAL)	20.91	23.91	29.88	37.35	44.83	59.77	74.72	89.66	104.60	119.55	149.44	179.33	209.21	224.16	239.10	269.00	298.88
HEATING SURFACE (FT^2)	364	412	510	643	765	1022	1282	1525	1765	2019	2517	3017	3548	3783	4040	4541	5040
FURNACE VOLUME (FT^3)	18.93	22.51	29.66	34.26	42.39	52.18	68.81	84.37	95.32	115.17	148.7	171.45	183.76	192.05	206.57	236.99	259.82
DESIGN PRESSURE*	250	250	250	250	250	250	250	250	250	250	250	250	250	250	250	250	250
LENGTH OVERALL (IN)	158	171	197	183	205	210	241	270	278	263	305	301	297	305	319	324	343
WIDTH OVERALL WITH TRIM (IN)	73	73	73	80	80	90	90	90	99	110	110	116	124	124	124	132	132
HEIGHT OVERALL (IN)	85	85	85	92	92	102	102	102	108	119	119	125	133	133	133	141	141
SHIPPING WEIGHT APPROX 15 PSI**	8400	9100	10400	11500	12900	17500	20300	23000	25800	29200	35300	39200	43100	44900	47200	51700	55800
SHIPPING WEIGHT APPROX 150 PSI**	9300	10000	11300	12800	14200	19400	22300	24900	28700	33200	38500	42800	46600	48300	50700	60400	65200

*Higher Pressures are available upon request. **Shipping Weights are approximate. Dimensions are subject to change without notice. Certified drawings are available.

+ 3-Pass wetback design
+ Pressures from 15-300 psi steam and 30-160 psi hot water
+ Corrugated furnaces on ASME Section I high pressure boilers
+ Sizes from 70-2,500 BoHP
+ Large furnace and rear turnaround volume for complete combustion
+ Packaged with gas, oil, or combination gas & oil Burner

3524 E. 4th Ave., Hutchinson, KS 67501 • (620) 662-6693 • sales@superiorboiler.com • SuperiorBoiler.com

ABMA LEADERSHIP FOR THE BOILER INDUSTRY

CONFIDENTIAL, FOR USE AND DISTRIBUTION ONLY BY S.B.W. INC. REPRESENTATIVES

Superior Boiler Works, Inc.

MANUFACTURER OF SCOTCH MARINE BOILERS

3524 E. 4th Ave.
Hutchinson, Ks. 67501

TEL: 800-444-6693
FAX: 620-662-7586

SUPERIOR BOILER PERFORMANCE

Reps: CS&E
Project:

Model: X6-X-1750-W125-WBCF-G **[NOx < 30 ppm]**
Firing: Nat. Gas **HHV =** 1,000 Btu/Ft3

Boiler Type & Size	----------	3-Pass Wetback	**w/X-ID Tubes**
Radiant Heat'g Surface	----------	201.7 Ft2	
Tubes Heat'g Surface	----------	1,519.0 Ft2	

	Operating Conditions	**CONSTANT FLOW RATE (GPM)**				
	Inlet Water Temp.	160	165	170	175	Deg. F
	Outlet Water Temp.	180	180	180	180	Deg. F
Assumed	Combustion Air Temp	80	80	80	80	Deg. F
Assumed	Relative Humidity	30	30	30	30	%
	Water Temperature	180	180	180	180	Deg. F
	Outlet Water Enthalpy	148.0	148.0	148.0	148.0	Btu/Lb
	Boiler Water Enthalpy	148.0	148.0	148.0	148.0	Btu/Lb
	Inlet Water Enthalpy	128.0	132.9	137.9	142.9	Btu/Lb

Firing Rate	100	75	50	25	%
Excess Air	15	15	15	15	%
CO2 in Dry Flue Gas	10.1	10.1	10.1	10.1	% Vol
O2 in Dry Flue Gas	3.0	3.0	3.0	3.0	% Vol
Rated Fuel Input	14,645	10,984	7,323	3,661	SCFH
	14,645	10,984	7,323	3,661	MBH
Combustion Air	11,977	8,983	5,989	2,994	Lb/hr
	2,674	2,005	1,337	668	SCFM
Flue Gas Flow	12,635	9,476	6,317	3,159	Lb/hr
	2,924	2,193	1,462	731	SCFM
LOSSES					
Flue Gas	13.04	12.73	12.39	12.03	%
Radiation&Convect.	0.22	0.29	0.43	0.86	%
EFFICIENCY (HHV)					
Thermal	86.96	87.27	87.61	87.97	%
Fuel to Water	86.74	86.98	87.18	87.10	%
BOILER					
Heat Output	12,704	9,554	6,384	3,189	MBH
Water Flow	1,268	1,263	1,260	1,258	GPM
Stack Temp-	235	221	206	191	Deg. F

NOTES:

1- Boiler performance is based on the heat loss method.

2- Jacket losses (radiation and convection losses) are calculated based on actual losses through boiler insulation and connections.

Mokhtar Matallah
V.P. of Engineering
Email: mmatallah@superiorboiler.com

CONFIDENTIAL, FOR USE AND DISTRIBUTION ONLY BY S.B.W. INC. REPRESENTATIVES

Superior Boiler Works, Inc.

MANUFACTURER OF SCOTCH MARINE BOILERS

3524 E. 4th Ave.
Hutchinson, Ks. 67501

TEL: 800-444-6693
FAX: 620-662-7586

SUPERIOR BOILER PERFORMANCE

Reps: CS&E
Project:

Model: X6-X-1750-S150-WBCF-G **[NOx < 30ppm]**
Firing: Nat. Gas **HHV =** 1,000 Btu/Ft3

	Boiler Type & Size	3-Pass Wetback		**w/X-ID Tubes**
	Radiant Heat'g Surface	201.7	Ft2	
	Tubes Heat'g Surface	1,519.0	Ft2	
	Operating Conditions			
	Steam Pressure	100	psig	
	Feedwater Temperature	227	Deg. F	**From DA.**
Assumed	Combustion Air Temper	80	Deg. F	
Assumed	Relative Humidity	30	%	
Assumed	Blowdown	3	%	
	Steam Temperature	338.0	Deg. F	
	Steam Enthalpy	1,189.7	Btu/Lb	
	Boiler Water Enthalpy	309.1	Btu/Lb	
	Feedwater Enthalpy	195.3	Btu/Lb	

Firing Rate	100	75	50	25	%
Excess Air	15	15	15	15	%
CO2 in Dry Flue Gas	10.1	10.1	10.1	10.1	% Vol
O2 in Dry Flue Gas	3.0	3.0	3.0	3.0	% Vol
Fuel Input	14,645	10,984	7,323	3,661	SCFH
	14,645	10,984	7,323	3,661	MBH
Combustion Air	11,977	8,983	5,989	2,994	Lb/hr
	2,674	2,005	1,337	668	SCFM
Flue Gas Flow	12,635	9,476	6,317	3,159	Lb/hr
	2,924	2,193	1,462	731	SCFM
LOSSES					
Flue Gas	16.45	16.17	15.87	15.57	%
Radiation&Convect.	0.27	0.36	0.54	0.82	%
EFFICIENCY (HHV)					
Thermal	83.55	83.83	84.13	84.43	%
Fuel to Steam	83.27	83.47	83.59	83.61	%
BOILER					
Heat Output	12,196	9,168	6,121	3,061	MBH
Steam Flow	11,897	8,944	5,971	2,986	Lb/hr
Stack Temp-	384.5	371.9	358.7	345.5	Deg. F

Notes:
1- Boiler performance is based on the heat loss method.
2- Jacket losses (radiation and convection losses) are calculated based on actual losses through boiler insulation and connections.

Mokhtar Matallah
V.P. of Engineering
Email: mmatallah@superiorboiler.com

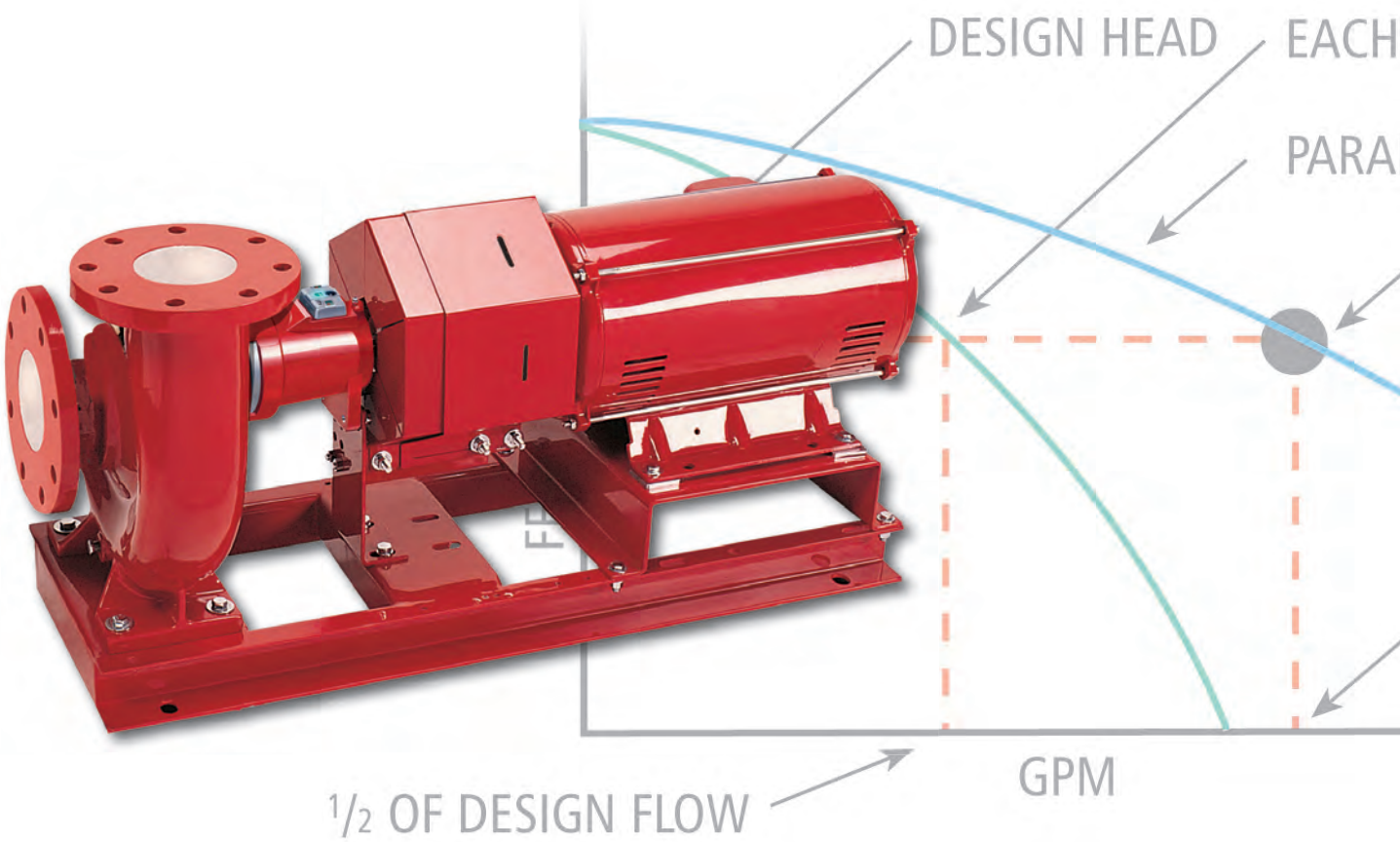

Series 1510
Centrifugal Pumps

B-207H

Bell & Gossett
a xylem brand

Table of Contents

Useful Pump Formulas 2

Standard Features 3

Technical Data 4

Materials of Construction 5

Selection Charts 6

Performance Curves 7

Centrifugal Pump Dimensions 8-9

The B&G End Suction Pump System 10

Typical Specifications 11

Useful Pump Formulas

$$\text{Pressure (PSI)} = \frac{\text{Head (Feet)} \times \text{Specific Gravity}}{2.31}$$

$$\text{Head (Feet)} = \frac{\text{Pressure (PSI)} \times 2.31}{\text{Specific Gravity}}$$

$$\text{Vacuum (Inches of Mercury)} = \text{Dynamic Suction Lift (Feet)} \times .883 \times \text{Specific Gravity}$$

$$\text{Horsepower (Brake)} = \frac{\text{GPM} \times \text{Head (Feet)} \times \text{Specific Gravity}}{3960 \times \text{Pump Efficiency}}$$

$$\text{Horsepower (Water)} = \frac{\text{GPM} \times \text{Head (Feet)} \times \text{Specific Gravity}}{3960}$$

$$\text{Efficiency (Pump)} = \frac{\text{Horsepower (Water)}}{\text{Horsepower (Brake)}} \times 100 \text{ Per Cent}$$

$$\text{NPSH (Available)} = \text{Positive Factors} - \text{Negative Factors}$$

Affinity Laws: Effect of change of speed or impeller diameter on centrifugal pumps.

	GPM Capacity	Ft. Head	BHP
Impeller Diameter Change	$Q_2 = \frac{D_2}{D_1} Q_1$	$H_2 = \left(\frac{D_2}{D_1}\right)^2 H_1$	$P_2 = \left(\frac{D_2}{D_1}\right)^3 P_1$
Speed Change	$Q_2 = \frac{RPM_2}{RPM_1} Q_1$	$H_2 = \left(\frac{RPM_2}{RPM_1}\right)^2 H_1$	$P_2 = \left(\frac{RPM_2}{RPM_1}\right)^3 P_1$

Where Q = GPM, H = Head, P = BHP, D = Impeller Dia., RPM = Pump Speed

Technical Data

BALANCE STANDARDS

Impellers are balanced to Hydraulic Institute Standards ANSI/HI 9.6.4-2009.

The allowable residual unbalance in the impeller rotating assembly conforms to ANSI grade G6.3 (Ref. ISO 1940).

ANSI Balance Quality Grades of G2.5 and G1 for the rotating assembly are also available. Consult your local Bell & Gossett Representative for additional details.

VIBRATION LIMITS

Series 1510 pumps conform to Hydraulic Institute ANSI/HI 9.6.4-2009 for recommended acceptable unfiltered field vibration limits (as measured at the pump bearings per
ANSI/HI 9.6.4-2009, Figure 9.6.4.2.3.1) for pumps with rolling contact bearings.

PUMP SPEED RPM	OVERALL DISPLACEMENT (Unfiltered) Peak to Peak-Mils (.001")
3600	2.2
1800	3.8
1200	5.8

SEISMIC CAPABILITIES

Series 1510 pumps are capable of withstanding a horizontal load of 0.5g* without adversely affecting pump operation.

*Piping and/or fasteners used to anchor the pump to the mounting pads on the floor are excluded.

MECHANICAL SEAL

Seal Features	
Standard Seal Type	B&G
Internally Flushed Seal	Yes
Enlarged Seal Chamber	Yes
Standard Seal Construction	Buna-Carbon-Ceramic
Standard Working Pressure	175 psig (12 Bar)
Maximum Working Pressure	250 psig (17 Bar)
Standard Seal Temperature Rating	225 deg F (107°C)
Optional Temperature Rating	250 deg F (121°C)

The ceramic material is 99.5% pure alumina oxide, ceramic seat hardness of 68 Rockwell C, or a tensile strength of 300,000 psi.

Materials of Construction

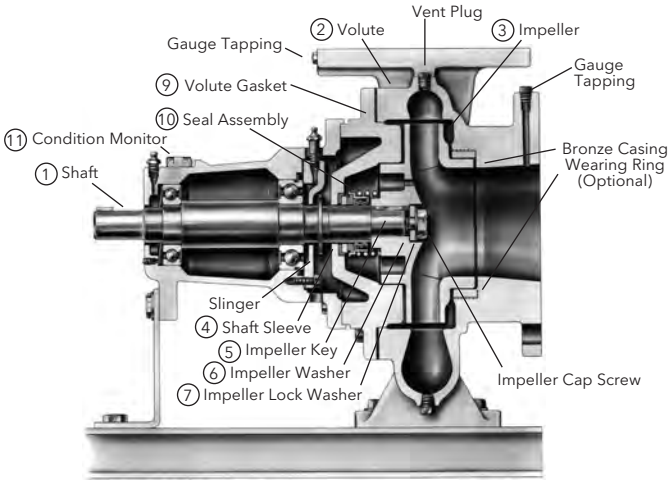

Standard Configuration

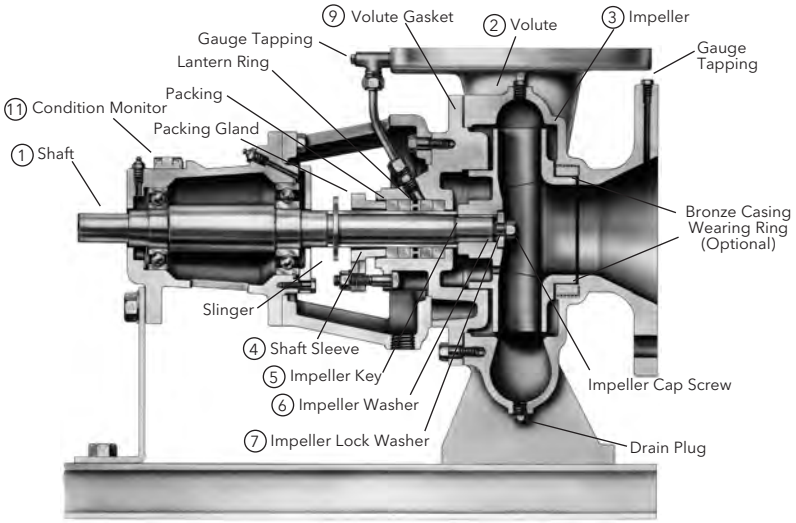

Optional – S Configuration

DESCRIPTION	BRONZE FITTED PUMP (STANDARD CONFIGURATION	ALL IRON PUMP (OPTIONAL)
1 Shaft	Steel SAE 1144	Steel SAE 1144
2 Volute	Cast Iron ASTM #A159	Cast Iron ASTM #A159
3 Impeller	Cast Bronze ASTM #B584	Cast Iron ASTM #A536
4 Shaft Sleeve	Bismuth Bronze #C89835	#304 Stainless Steel ASTM #A312
5 Impeller Key	#304 Stainless Steel	#304 Stainless Steel
6 Impeller Washer	1510 – Steel	Stainless Steel
7 Impeller Lock Washer	#304 Stainless Steel	#304 Stainless Steel
8 Impeller Cap Screw	#304 Stainless Steel	#304 Stainless Steel
9 Volute Gasket	Cellulose Fiber	Cellulose Fiber
10 Seal Assemblies		
11 Condition Monitor	Stainless Steel Encloser	Stainless Steel Encloser
Standard Seal		
Bellows	Buna N	Buna N
Faces	Carbon-Ceramic	Carbon-Ceramic
Metal Parts	Brass	Stainless Steel
Spring	Stainless Steel	Stainless Steel
For Stuffing Box		
10A Flushed Single		
O-Rings	EPR	EPR
Faces	Carbon-Tungsten Carbide	Carbon-Tungsten Carbide
Metal Parts	Stainless Steel	Stainless Steel
Spring	Stainless Steel	Stainless Steel
Packed		
Packing	Graphited Impregnated Teflon	Graphited Impregnated Teflon
Gland	Bronze	Cast Iron
Lantern Ring	Filled TFE	Filled TFE

*** For operating temperatures above 250°F, a cooled flush is required – and is recommended for temperatures above 225°F for optimum seal life. On closed systems, cooling is accomplished by inserting a small heat exchanger in the flush line to cool the fluid. Flush-line Filters and Sediment Separators are available on special request.*

OPTIONAL FEATURES

All Iron Construction

Bronze Casing Wear Ring

Stainless Steel Shaft Sleeve

Stainless Steel Shaft

Drip Pan

EPR/Tungsten Carbide Seal

(Standard Configuration only)

Stuffing Box Construction with several seal and packing options

Seal Selection Guide For:

A. Standard Seals

- BUNA-PH Limitations 7-9; Temperature Range –20°F to +225°F
- EPR-PH Limitations 7-11; Temperature Range –20°F to +250°F

For use on open or closed clear water systems. Maximum working pressure 175 psi.

B. Flushed Single Seals (Stuffing Box Design)

- PH Limitations 7-11; Temperature Range –20°F to +300°F**

For use on closed or open systems where the temperature or pressure requirements exceed the limitations of the standard seal. Available in 175 psi, or 250 psi working pressures.

C. Flushed double Seals (Stuffing Box Design)

PH Limitations 7-9; Temperature Range 0°F to +250°F

For use on closed or open low pressure systems which may contain a high concentration of abrasives. An external flush is required. Maximum working pressure 175 psi.

D. Packing (Stuffing Box Design)

PH Limitations 7-9; Temperature Range 0°F to +190°F

For use on open or closed systems which require a large amount of make-up water, as well as systems which are subjected to widely varying chemical conditions and solids buildup.

Selection Charts

60 Hz

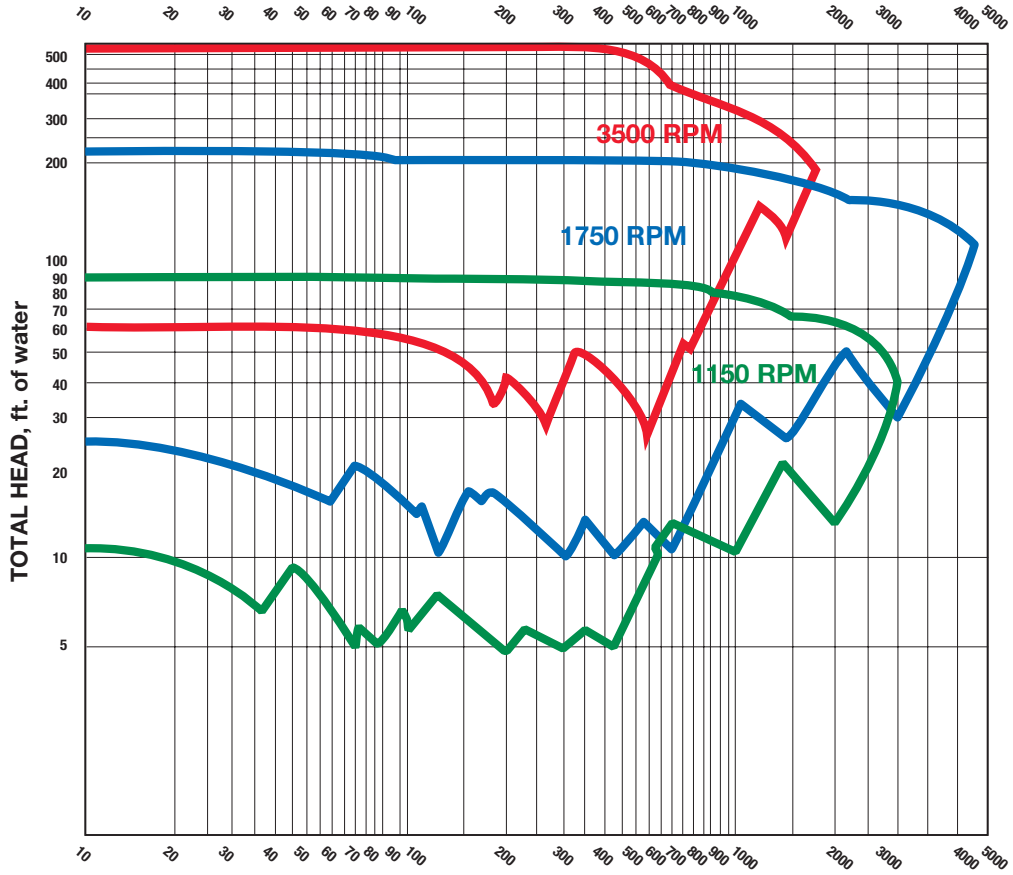

50 Hz

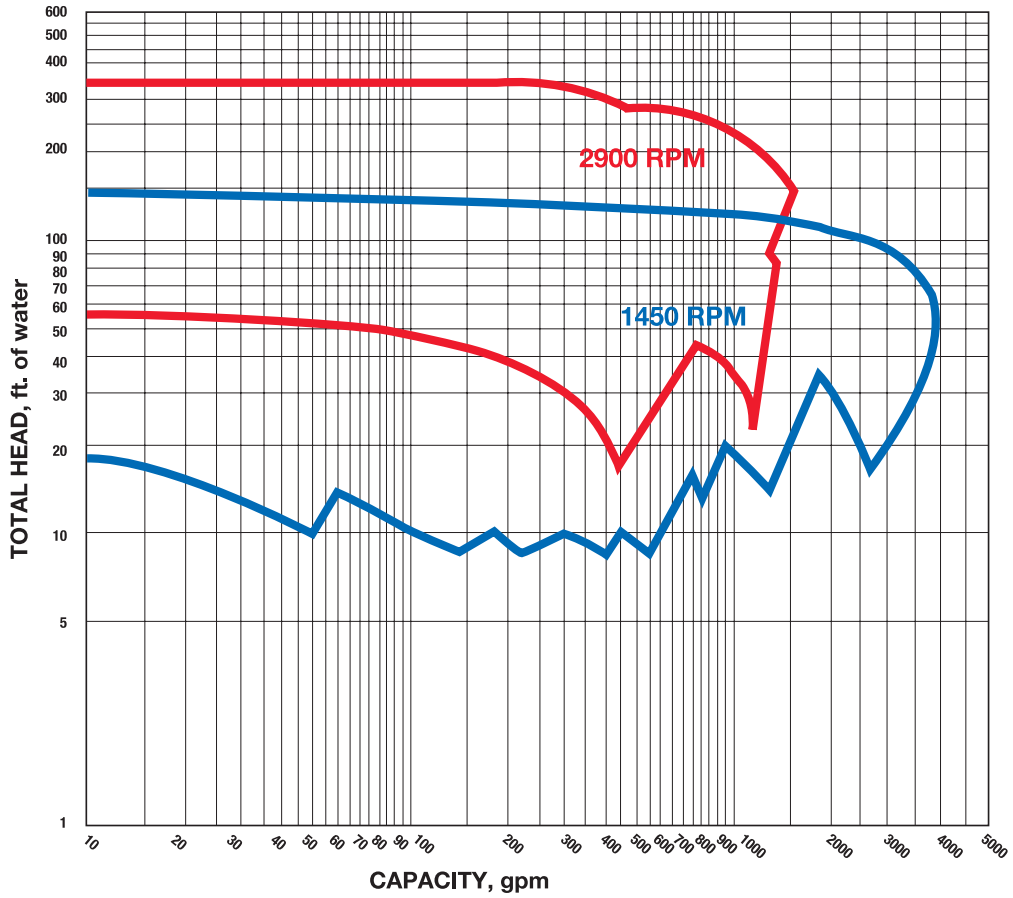

Series 1510 Performance Curves

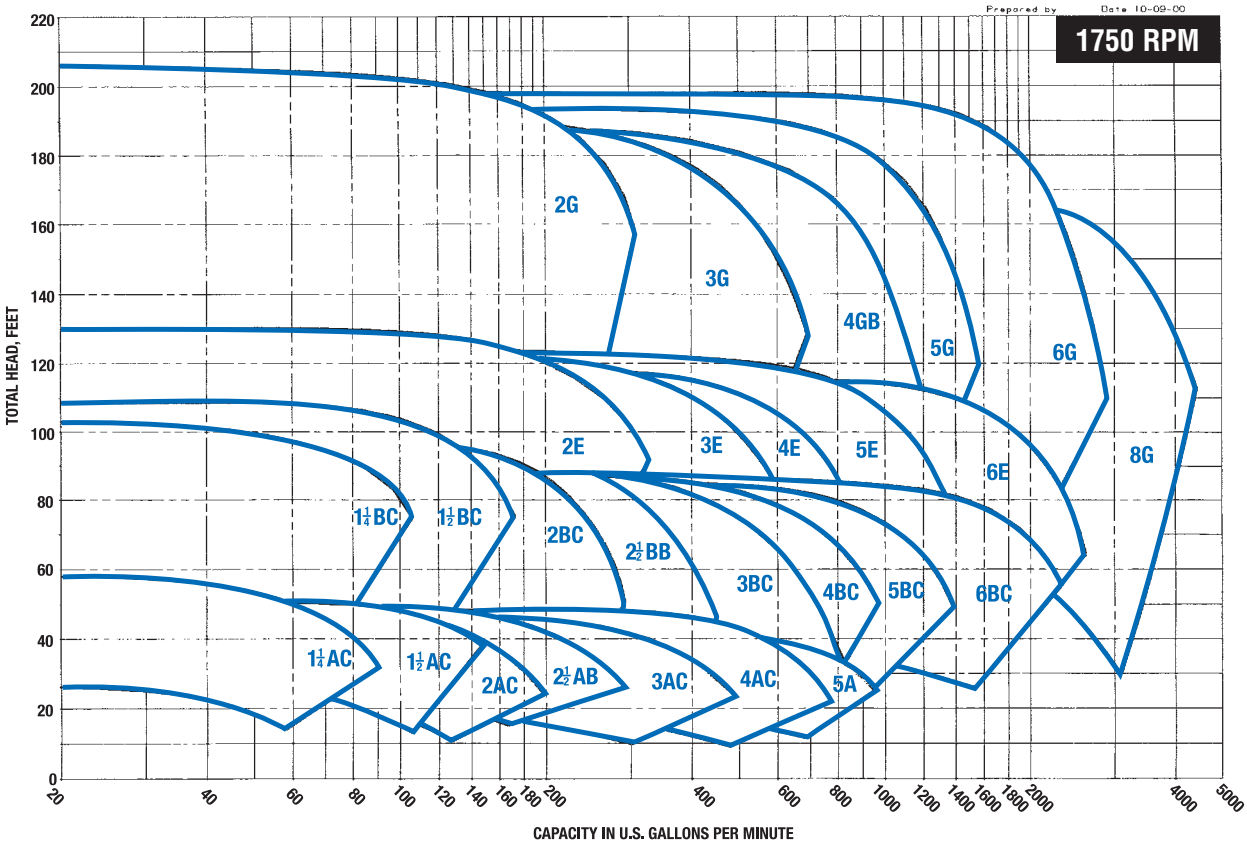

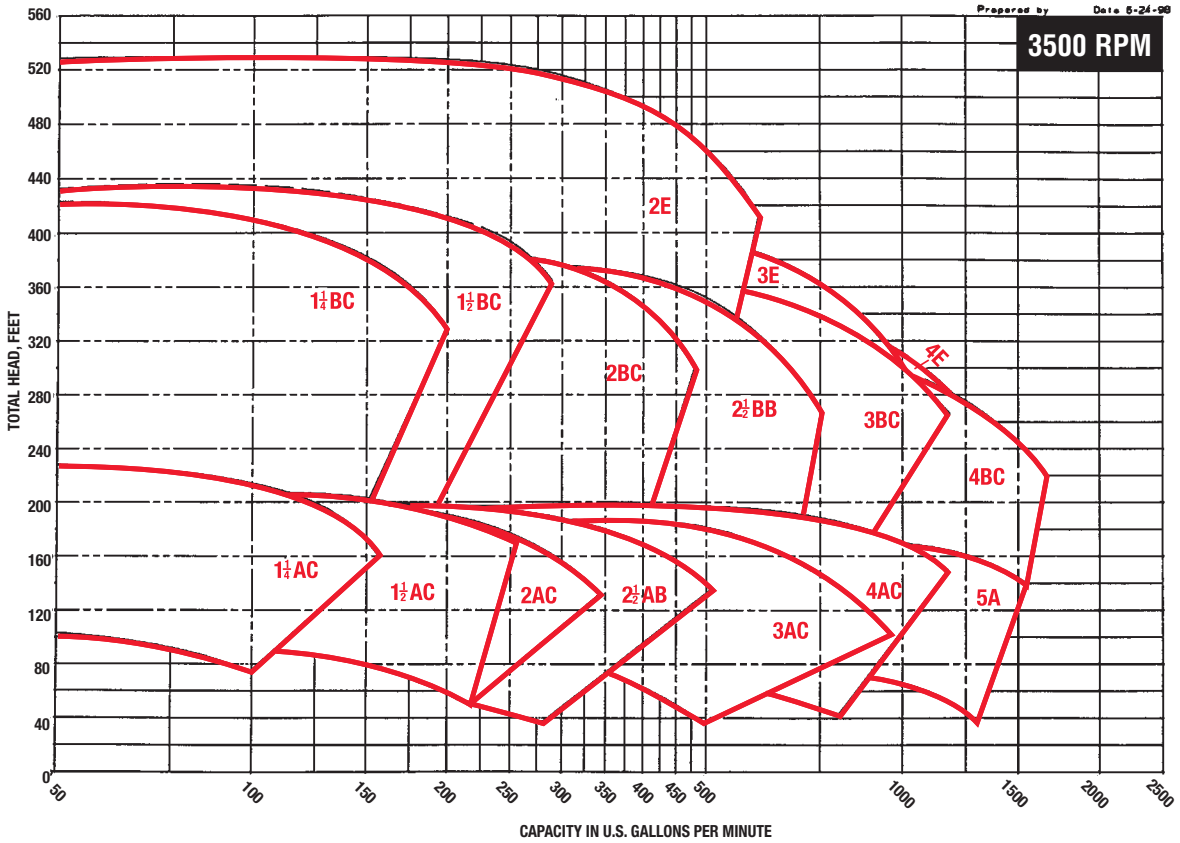

Series 1510 Centrifugal Pumps

Dimensions

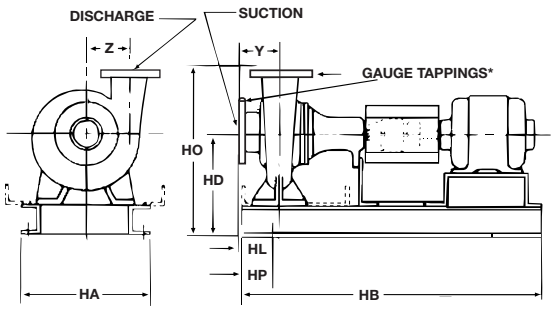

*Gauge Tapping Sizes: 1/8" for NPT, 1/4" for flanged sizes

Motor Horsepower and Frame Tabulation three phase (Dripproof Enclosure)

Horsepower	Frame @ 1750 RPM	Frame @ 3500 RPM	Horsepower	Frame @ 1750 RPM	Frame @ 3500 RPM
1/2	56		20	256T	254T
3/4	56		25	284T	256T
1	143T		30	286T	284TS
1 1/2	145T		40	324T	286TS
2	145T	145T	50	326T	324TS
3	182T	145T	60	364T	326TS
5	184T	182T	75	365T	364TS
7 1/2	213T	184T	100	404TS	365TS
10	215T	213T	125	–	404TS
15	254T	215T			

DIMENSIONS - INCHES (MM)			STANDARD MECHANICAL SEAL PUMP MODEL 1510, 1510-F								STUFFING BOX CONSTRUCTION PUMP MODEL 1510-PF, 1510-S							
PUMP SIZE DISCHARGE	SUCTION SIZE	MOTOR FRAME SIZE	HA	HB	HD	HL	HO	HP	Y	Z	HA	HB	HD	HL	HO	HP	Y	Z
1 1/4 AC (NPT)	1 1/2 (NPT)	56	12 (305)	28 3/4 (730)	9 3/4 (248)	3 1/8 (79)	14 3/4 (375)	3 (76)	3 1/4 (83)	4 1/2 (114)	14 5/8 (371)	34 5/8 (879)	9 3/4 (248)	1 3/4 (44)	14 3/4 (375)	3 (76)	3 1/4 (83)	4 1/2 (114)
		143T-145T																
		182T-184T	14 5/8 (371)	31(787)		1 3/4 (46)						39 3/4(1000)						
		213T-215T		34 5/8(879)														
1 1/4 BC (NPT)		143T-145T		31 (787)	10 3/4 (273)	1 13/16 (46)	18 3/4 (476)			5 1/2 (140)		34 5/8 (879)	10 3/4 (273)	1 13/16 (46)	18 3/4 (476)			5 1/2 (140)
		182T-184T																
		213T-215T		39 3/8(1000)														
		254T-256T	16 (406)	46 1/2 (1181)	12(305)	2 15/16 (75)	20(508)	5 (127)			16 (406)	46 1/2(1181)	12 (305)	2 15/16 (75)	20 (508)	5 (127)		
		284TS-286TS			13(330)		21(533)					51 3/4 (1314)	13(330)		21(533)			
1 1/2 AC (NPT)	2 (NPT)	56	12 (305)	28 3/4 (730)	9 3/4 (248)	3 1/16 (78)	15 3/4 (400)	3 (76)	3 1/8 (79)	4 5/8 (117)	14 5/8 (371)	34 5/8 (879)	9 3/4 (248)	1 11/16 (43)	15 3/4 (400)	3 (76)	3 1/8 (79)	4 5/8 (117)
		143T-145T																
		182T-184T	14 5/8 (371)	31(787)	10 3/4 (273)	1 11/16 (43)						39 3/4(1000)						
		213T-215T		34 5/8(879)														
		254T-256T		39 3/8(1000)			16 3/4(425)				16(406)	46 1/2(1181)	12(305)	2 13/16(71)	18(457)	5(127)		
1 1/2 BC (NPT)		143T-145T		31 (787)			17 1/4 (438)			5 3/4 (146)	14 5/8 (371)	34 5/8 (879)	10 3/4 (273)	1 11/16 (43)	17 1/4 (438)	3 (76)		5 3/4 (146)
		182T-184T																
		213T-1750		34 5/8(879)								39 3/4(1000)						
		213T-215T-3500		39 3/8(1000)								46 1/2(1181)	12 (305)	2 13/16 (71)	18 1/2 (470)	5 (127)		
		254T-256T	16 (406)	46 1/2 (1181)	12(305)	2 13/16 (71)	18 1/2(470)	5 (127)			16 (406)	51 3/4 (1314)						
		284TS-286TS			13(330)		19 1/2(495)						13(330)		19 1/2(495)			
2 AC	2 1/2	56	12 (305)	28 3/4 (730)	9 3/4 (248)	3 9/16 (90)	16 1/4 (413)	3 (76)	3 1/2 (89)	4 3/4 (121)	14 5/8 (371)	34 5/8 (879)	9 3/4 (248)	2 3/16 (56)	16 1/4 (413)	3 (76)	3 1/2 (89)	4 3/4 (121)
		143T-145T																
		182T-184T	14 5/8 (371)	31(787)	10 3/4 (273)	2 3/16 (56)												
		213T-215T		34 5/8(879)							16 (406)	46 1/2(1181)	11(279)	3 5/16 (84)	17 1/2(445)	5 (127)		
		254T-256T		39 3/8(1000)			17 1/4(438)					51 3/4(1314)	12(305)		18 1/2(470)			
2 BC		143T-145T		31 (787)		2 11/16 (68)	17 3/4 (451)		4 (102)	5 3/8 (149)	14 5/8 (371)	34 5/8 (879)	10 3/4 (273)	2 11/16 (68)	17 3/4 (451)	3 (76)	4 (102)	5 3/8 (149)
		182T-184T																
		213T-215T-1750		34 5/8(879)								39 3/8(1000)						
		254T-3500		39 3/8(1000)								46 1/2(1181)	12 (305)	3 13/16 (97)	19 (483)	5 (127)		
		254T-256T	16 (406)	46 1/2 (1181)	12(305)	3 13/16 (97)	19(483)	5 (127)			16 (406)	51 3/4 (1314)	13(330)		20(508)			
		284TS-286TS			13(330)		20(508)											
		324TS-326TS			12(305)		19(483)						12(305)		19(483)			
2 E†	3	182T	16 (406)	42 1/4 (1073)	14 (356)	6 1/2 (165)	22 (559)	5 (127)	5 1/2 (140)	6 1/2 (165)		42 1/4 (1073)	14 (356)	6 1/2 (165)	22 (559)	5 (127)	5 1/2 (140)	6 1/4 (165)
		184T																
		213T																
		215T																
		254T																
		286TS		46 1/2(1181)		4 1/8 (105)						51 3/4 (1314)		4 1/8 (105)				
		324TS		51 3/4 (1314)														
		326TS																
		364TS	24 (610)	56 (1422)	16 1/2 (419)	4 3/4 (121)	24 1/2 (622)	6 (152)			24 (610)	56 (1422)	16 1/2 (419)	4 3/4 (121)	24 1/2 (622)	6 (152)		
		365TS																
2 G†		213T-215T	16 (406)	46 1/2 (1181)	14 (356)	3 7/8 (98)	23 (584)	5 (127)		7 1/4 (184)	16 (406)	46 1/2(1181)	14 (356)	3 7/8 (98)	23 (584)	5 (127)		7 1/4 (184)
		254T-256T										51 3/4 (1314)						
		284T		51 3/4(1314)														
2 1/2 AB		56	12 (305)	28 3/4 (730)	9 3/4 (248)	4 3/8 (111)	15 3/4 (400)	3 (76)	4 1/4 (108)	4 11/16 (119)	14 5/8 (371)	34 5/8 (879)	9 3/4 (248)	3 (76)	15 3/4 (400)	3 (76)	4 1/4 (108)	4 11/16 (119)
		143T-145T																
		182T-184T	14 5/8 (371)	31(787)		3 (76)												
		213T-215T		34 5/8(879)							16 (406)	46 1/2(1181)	11(279)	4 1/8 (105)	17 (432)	5 (127)		
		254T-256T		39 3/8(1000)	10 3/4 (273)		16 3/4(425)					51 3/4(1314)	12(305)					
2 1/2 BB		182T-184T		31(787)		2 3/4 (70)	17 1/2 (445)		4 (102)	6 (152)	14 5/8 (371)	34 5/8(879)	10 3/4 (273)	2 3/4 (70)	17 1/2 (445)	3 (76)	4 (102)	6 (152)
		213T-215T		34 5/8(879)								39 3/8(1000)						
		284TS-286TS	16 (406)	46 1/2 (1181)	13(330)	3 7/8 (98)	19 3/4(502)	5 (127)			16 (406)	51 3/4 (1314)	13(330)	3 7/8 (98)	19 3/4(502)	5 (127)		
		324TS-326TS			12(305)		18 3/4(476)						12(305)		18 3/4(476)			
		346TS		51 3/4(1314)	13(330)		19 3/4(502)						13(330)		19 3/4(502)			
3 AC	4	143T-145T	12(305)	28 3/4(730)	9 3/4 (248)	4 5/16(110)	15 3/4 (400)	3 (76)	4 1/8 (105)	5 (127)	14 5/8 (371)	34 5/8 (879)	9 3/4 (248)	2 15/16 (75)	15 3/4 (400)	3 (76)	4 1/8 (105)	5 (127)
		182T-184T	14 5/8 (371)	31(787)		2 15/16 (75)												
		215T		39 3/8(1000)								46 1/2(1181)	11(279)	4 1/16 (103)	17(432)	5 (127)		
		254T-256T	16 (406)	46 1/2 (1181)	12(305)	4 1/16 (103)	18(457)	5 (127)			16 (406)	51 3/4 (1314)	12(305)		18(457)			
		284TS-286TS			13(330)		19(483)						13(330)		19(483)			

These dimensions are not to be used for installation purposes unless certified. †250 psi (17 bar) available Maximum Working Pressure 175 psi (12 bar)

Series 1510 Centrifugal Pumps cont.'d

DIMENSIONS – INCHES (MM)			STANDARD MECHANICAL SEAL PUMP MODEL 1510, 1510-F								STUFFING BOX CONSTRUCTION PUMP MODEL 1510-PF, 1510-S							
PUMP SIZE DISCHARGE	SUCTION SIZE	MOTOR FRAME SIZE	HA	HB	HD	HL	HO	HP	Y	Z	HA	HB	HD	HL	HO	HP	Y	Z
3 BC	4	182T-184T	14 5/8 (371)	31(787)	10 3/4 (273)	3 11/16 (94)	18 3/4 (464)	3 (76)	4 3/4 (121)	6 1/8 (156)	14 5/8 (371)	34 5/8(879)	10 3/4 (273)	3 11/16 (94)	18 1/4 (464)	3 (76)	4 3/4 (121)	6 1/8 (156)
		213T-215T		34 5/8(870)								39 3/8(1000)						
		254T		39 3/8(1000)							16 (406)	46 1/2(1181)	12(305)	4 13/16 (122)	19 1/2(495)	5 (127)		
		284TS-286TS	16 (406)	46 1/2 (1181)	13(330)	4 13/16 (122)	20 1/2(521)	5 (127)				51 3/4 (1314)	13(330)		20 1/2(521)			
		324TS-326TS			12(305)		19 1/2(495)						12(305)		19 1/2(495)			
3 E†		184T		42 1/4 (1073)	14 (356)	6 11/16 (170)	23 1/2 (597)		5 1/2 (140)	7 3/8 (187)	16 (406)	42 1/4 (1073)	14 (356)	6 11/16 (170)	23 1/2 (597)	5 (127)	5 1/2 (140)	7 3/8 (187)
		213T-215T										51 3/4 (1314)		4 5/16 (110)				
		254T				4 5/16 (110)												
		256T		46 1/2(1181)														
		326TS		51 3/4(1314)														
		364TS-365TS	24 (610)	56 (1422)	16 1/2 (419)	4 15/16 (125)	26 (660)	6 (152)			24 (610)	56 (1422)	16 1/2 (419)	4 15/16 (125)	26 (660)	6 (152)		
		404TS																
3 G†		213T-215T	16 (406)	46 1/2 (1181)	14 (356)	4 1/8 (105)	23 1/2 (597)	5 (127)	5 5/8 (143)	8 (203)	16 (406)	46 1/2(1181)	14 (356)	4 1/8 (105)	23 1/2 (597)	5 (127)	5 5/8 (143)	8 (203)
		254T-256T										51 3/4 (1314)						
		284T-286T		51 3/4 (1314)														
		324T																
4 AC†	5	145T	14 5/8 (371)	31 (787)	10 3/4 (273)	4 5/16 (110)	18 3/4 (464)	3 (76)	4 15/16 (125)	5 3/4 (146)	14 5/8 (371)	34 5/8 (879)	10 3/4 (273)	4 5/16 (110)	18 1/4 (464)	3 (76)	4 15/16 (125)	5 3/4 (146)
		182T-184T		34 5/8(870)							16 (406)	39 3/8(1000)						
		213T		39 3/8(1000)								46 1/2(1181)	12 (305)	5 7/16 (138)	19 1/2 (495)	5 (127)		
		215T										51 3/4 (1314)						
		254T-256T	16 (406)	46 1/2 (1181)	12(305)	5 7/16 (138)	19 1/2(495)	5 (127)					13(330)		20 1/2(521)			
		284TS-286TS			13(330)		20 1/2(521)						12(305)		19 1/2(495)			
		324TS-326TS			12(305)		19 1/2(495)											
4 BC		213T-215T	14 5/8 (371)	34 5/8(870)	12 3/4 (324)	4 (102)	20 3/4 (527)	3 (76)	5 (127)	7 (178)		46 1/2(1181)	14 (356)	5 1/8 (130)	22 (559)		5 (127)	7 (178)
		254T		39 3/8(1000)								51 3/4 (1314)						
		256T	16 (406)	46 1/2 (1181)	14 (356)	5 1/8 (130)	22 (559)	5 (127)			N/A							
		286TS		51 3/4(1314)														
		324TS-326TS																
		364TS-365TS	24 (610)	56 (1422)	16 1/2 (419)	5 3/4 (146)	24 1/2 (622)	6 (152)										
		404TS																
4 E†		213T-215T	16 (406)	42 1/4 (1073)	14 (356)	6 11/16 (170)	23 3/4 (603)	5 (127)	5 9/16 (141)	7 1/4 (184)	16 (406)	42 1/4 (1073)	14 (356)	6 11/16 (170)	23 3/4 (603)	5 (127)	5 9/16 (141)	7 1/4 (184)
		254T										51 3/4 (1314)		4 5/16 (110)				
		256T		46 1/2(1181)		4 5/16 (110)												
		284T-286T		51 3/4 (1314)														
		324TS-326TS																
		364TS-365TS	24 (610)	56 (1422)	16 1/2 (419)	4 15/16 (125)	26 1/4 (667)	6 (152)			24 (610)	56 (1422)	16 1/2 (419)	4 15/16 (125)	26 1/4 (667)	6 (152)		
		404TS																
4 GB		213T-215T	16 (406)	46 1/2 (1181)	15 (381)	5 3/8 (137)	25 (635)	5 (127)	6 (152)	8 9/16 (217)	16 (406)	46 1/2(1181)	15 (381)	5 3/8 (137)	25 (635)	5 (127)	6 (152)	8 9/16 (217)
		254T-256T										51 3/4 (1314)						
		284T-286T		51 3/4 (1314)														
		324T																
5 A†	6	182T-184T	14 5/8 (371)	31(787)	12 3/4 (324)	5 3/4 (146)	21 1/4 (540)	3 (76)	5 13/16 (148)	6 1/4 (159)	14 5/8 (371)	34 5/8(879)	12 3/4 (324)	5 3/4 (146)	21 1/4 (540)	3 (76)	5 13/16 (148)	6 1/4 (159)
		213T-215T		34 5/8(870)								39 3/8(1000)						
		254T-256T	16 (406)	46 1/2 (1181)	14 (356)	6 7/8 (175)	22 1/2 (572)	5 (127)			16 (406)	51 3/4 (1314)	14 (356)	6 7/8 (175)	22 1/2 (572)	5 (127)		
		284TS-286TS																
		324TS-326TS		51 3/4 (1314)														
		364TS																
5 BC†		213T-215T		46 1/2 (1181)	15 (381)	4 9/16 (116)	25 (635)		6 (152)	7 1/2 (191)		46 1/2(1181)	15 (381)	6 7/16 (164)	25 (635)		6 (152)	7 1/2 (191)
		254T										51 3/4 (1314)						
		256T				6 7/16 (164)												
		284T		51 3/4(1314)														
5 E†		254T-256T		46 1/2(1181)		4 7/16 (113)	25 1/2 (648)		5 7/16 (138)	7 15/16 (202)				4 7/16 (113)	25 1/2 (648)		5 7/16 (138)	7 15/16 (202)
		284T-286T		51 3/4 (1314)														
		324T																
5 G†		254T-256T	24 (610)	56 (1422)	16 1/2 (419)	5 7/16 (138)	29 1/2 (749)	6 (152)	6 (152)	9 (229)	24 (610)	56 (1422)	16 1/2 (419)	5 7/16 (138)	29 1/2 (749)	6 (152)	6 (152)	9 (229)
		284T-286T																
		324T-326T																
		364T-365T																
6 BC†	8	254T-256T	16 (406)	46 1/2(1181)	15 (381)	8 3/8 (213)	25 1/2 (648)	5 (127)	7 (178)	8 1/4 (210)	16 (406)	51 3/4 (1314)	15 (381)	8 3/8 (213)	25 1/2 (648)	5 (127)	7 (178)	8 1/4 (210)
		284T-286T		51 3/4 (1314)														
		324T-326T																
6 E†		254T-256T	24 (610)	56 (1422)	16 1/2 (419)	6 (152)	27 1/2 (699)	6 (152)	6 1/8 (156)	8 1/2 (216)	24 (610)	56 (1422)	16 1/2 (419)	6 (152)	27 1/2 (699)	6 (152)	6 1/8 (156)	8 1/2 (216)
		284T-286T																
		324T-326T																
		364T																
6 G†*		"L" FRAME – TO AND INCLUDING 12 1/2" IMPELLER																
		256T	24 (610)	56 (1422)	16 1/2 (419)	6 1/4 (159)	30 1/2 (775)	6 (152)	6 1/2 (165)	9 5/16 (237)	24 (610)	56 (1422)	16 1/2 (419)	6 1/4 (159)	30 1/2 (775)	6 (152)	6 1/2 (165)	9 5/16 (237)
		284T-286T																
		324T-326T																
		364T-365T																
		404TS																
		"XL" FRAME – 12 5/8" IMPELLER AND LARGER																
		365TS	26 (660)	59 1/4 (1505)	17 (432)	6 1/2 (165)	31 (787)	6 (152)	6 1/2 (165)	9 5/16 (237)	26 (660)	59 1/4 (1505)	17 (432)	6 1/2 (165)	31 (787)	6 (152)	6 1/2 (165)	9 5/16 (237)
		404TS-405TS																

These dimensions are not to be used for installation purposes unless certified. †250 psi (17 bar) available Maximum Working Pressure 175 psi (12 bar)

*13 1/2" impeller for 1450 RPM service with "L" frame.

8G ONLY

DIMENSIONS – INCHES (MM)			STUFFING BOX CONSTRUCTION PUMP MODEL 1510-S						
PUMP SIZE DISCHARGE	SUCTION SIZE	MOTOR FRAME SIZE	HA	HB	HD	HL	HO	HP	Y
8G (203)	10 (254)	284T-445TS	28 (711)	70 (1778)	18 1/4 (464)	.44 (11)	35.7 (907)	1 1/4 (32)	4 3/4 (121)

Flanges are: 125# ANSI - Standard

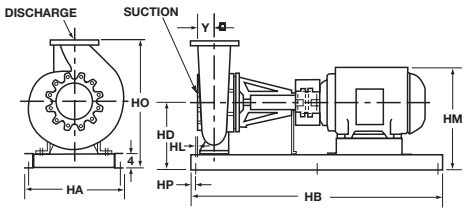

Typical Specification for Series 1510 Base Mounted, Flexible Coupled, End-Suction Pumps

Furnish and install pumps with performance characteristics as shown on plans. Pumps shall be base mounted, single stage, end suction design with a foot mounted volute to allow removal and service of the entire rotating assembly without disturbing the pump piping, electrical motor connections or pump to motor alignment.

A CSA certified condition monitor shall be installed on the pump power end to continuously measure vibration and temperature at the outboard bearing. Vibration modes shall be based on ANSI/HI 9.6.4-2009 and ISO 101816 recommended levels. Vibration alarms shall be at 100% increase over pump baseline. Minimum vibration of 0.125 inch/sec is required to avoid nuisance tripping. A high vibration alarm shall be at 0.50 inch/sec. Temperature alarm shall be at 195°F (91°C). The condition monitors' electronics shall be potted in epoxy and surrounded by a stainless steel enclosure. Accuracy shall be +/- 15% within an ambient temperature range of -40°F to 212°F (-40°C to 100°C).

Pump volute shall be Class 30 cast iron with integrally-cast pedestal support feet. The impeller shall be cast bronze enclosed type, balanced to ANSI/HI 9.6.4-2009 balance grade G6.3 and keyed to the shaft and secured by a locking capscrew.

The liquid cavity shall be sealed off at the pump shaft by an internally-flushed mechanical seal with ceramic seal seat and carbon seal ring, suitable for continuous operation at 225°F (107°C). A replaceable bronze shaft sleeve shall completely cover the wetted area under the seal.

Pump shall be rated for minimum of 175 psi (12 bar) working pressure. Volute shall have gauge tappings at the suction and discharge nozzles and vent and drain tappings at the top and bottom.

The pump(s) vibration limits shall conform to Hydraulic Institute ANSI/HI 9.6.4-2009 for recommend acceptable unfiltered field vibration limits (as measured per ANSI/HI 9.6.4-2009 Figure 9.6.4.2.3.1) for pumps with rolling contact bearings.

Baseplate shall be of structural steel or fabricated steel channel with fully enclosed sides and ends, and securely welded cross members. Grouting area shall be fully open. The combined pump and motor baseplate shall be sufficiently stiff as to limit the susceptibility of vibration. The minimum baseplate stiffness shall conform to ANSI/HI 1.3-2009 for Horizontal Baseplate Design standards.

The seismic capability of the pump shall allow it to withstand a horizontal load of 0.5g, excluding piping and/or fasteners used to anchor the pump to mounting pads or to the floor, without adversely affecting pump operation.

A flexible type, center drop-out design coupler, capable of absorbing torsional vibration, shall be employed between the pump and motor. Pumps for variable speed application shall be provided with a suitable coupler sleeve. The coupling shall be shielded by a dual rated ANSI B15.1 & OSHA 1910.219 compliant coupling guard and contain viewing windows for inspection of the coupling.

Motor shall meet NEMA and EISA 2007 (where applicable) specifications and shall be of the size, voltage and enclosure called for on the plans. Pump and motor shall be factory aligned, and shall be realigned by the contractor per factory recommendations after installation.

The pump(s) selected shall conform to ANSI/HI 9.6.3.1 standards for Preferred Operating Region (POR) unless otherwise approved by the engineer.

Each pump shall be factory hydrostatically tested per Hydraulic Institute standards. It shall then be thoroughly cleaned and painted with at least one coat of high grade paint prior to shipment.

The pump(s) shall be manufactured, assembled and tested in an ISO 9001 approved facility.

Pumps shall be Series 1510 as manufactured by Xylem Bell &Gossett or equal.

PRODUCT CUT SHEETS

ECM-5 & 5b Water Conservation/PRV Replacement

WATER CONSERVATION PRODUCTS
CORRECTIONAL APPLICATIONS

NEXUS® Model - 8 I/O AC Controller

CTR-X12-AC-08 Series

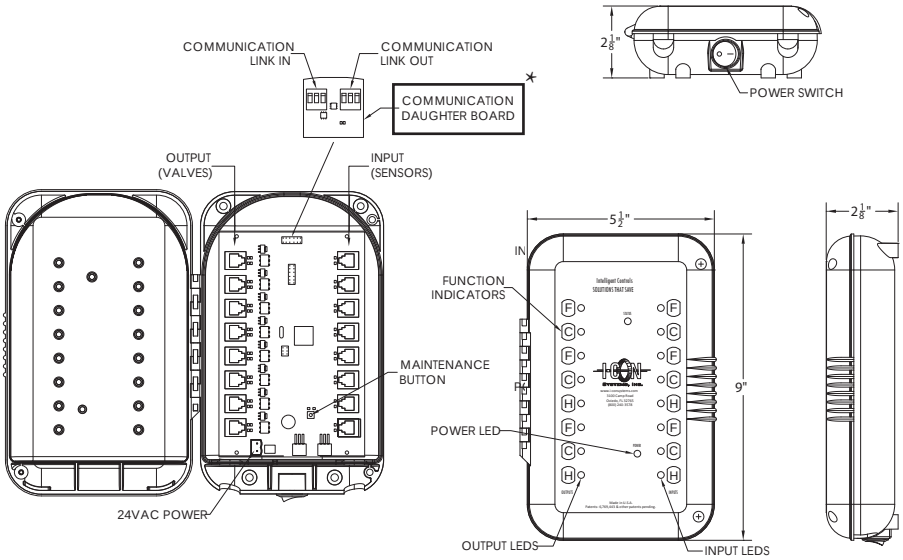

* **Note:** Communication Daughter Board is required for communicating controllers only.

► Description

Standalone or Communicating Eight Input/Eight Output Controller used to control up to Eight buttons and valves. Multiple controllers can be networked and linked into an I-CON ENVISAGE® powered computer system.

► 8 I/O Program Type (choose one)

	Port # 12345678
☐ Two Combies and Two Showers	(HCFHCFSS)
☐ Two Combies and Two Flush	(HCFHCFFF)
☐ Two Combies and Cold, Hot	(HCFHCFCH)
☐ Two Combies and Flush, Hot	(HCFHCFFH)
☐ Eight Showers	(SSSSSSSS)
☐ Eight Waterclosets	(FFFFFFFF)
☐ Four Lavatories	(HCHCHCHC)
☐ Special Order - Please Contact Factory	_____

Specifications

- New Water Resistant Enclosure
- Designed for penal use and other vandal prone areas to conserve potable water consumption
- 24 VAC power with low power consumption
- Electrical telephone plug type connectors for sensor and solenoid
- Ability to be remotely located up to three hundred (300) feet from the associated fixtures
- UL Listed (E308296) and independently tested
- Adjustable program times without dip switches
- Power switch on the exterior of the housing
- Amber power LED illuminates with power
- Green LEDs illuminate at each port to show the port is active
- Red LEDs indicate block times are in effect
- Power surge protection and voltage spike protection
- Nominal Current Draw: 90mA
- Current Draw per active port: 180 mA

► Accessories

See Accessories Section of the I-CON catalog or contact our Customer Service Team for details.

This space is for Architect/Engineer approval

The information contained in this document is subject to change without notice.

I-CON Systems, Inc. • 3100 Camp Road, Oviedo, FL 32765 • Toll Free (800) 240-3578 • Fax (407) 365-7944 • www.i-con.com

©2012 I-CON Systems, Inc. One or more products contained herein are protected by U.S. Patent with other undergoing the patent process. Printed in the U.S.A. JAN 2012/01

NEXUS® Model - 4 I/O AC Controller

CTR-X12-AC-04 Series

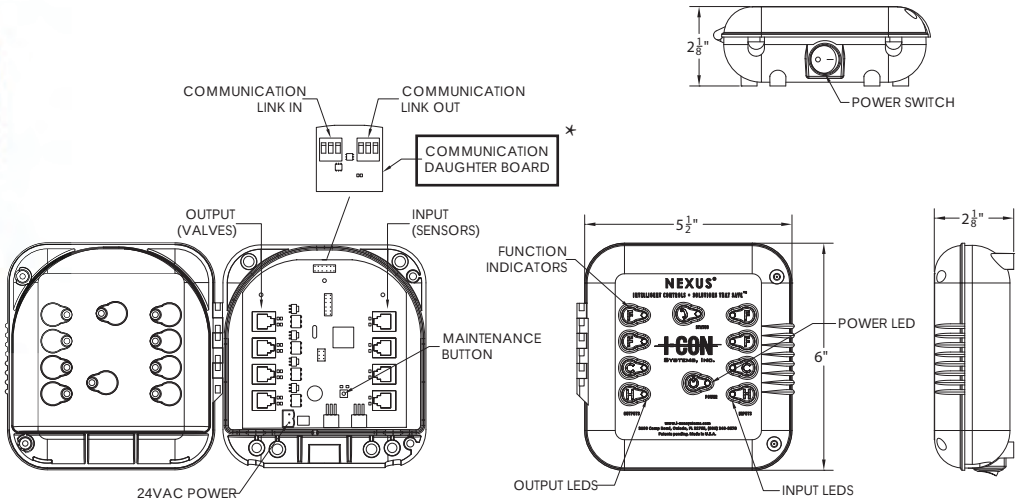

* **Note:** Communication Daughter Board is required for communicating controllers only.

► Description

Standalone or Communicating Four Input/Four Output Controller used to control up to Four buttons and valves. Multiple controllers can be networked and linked into an I-CON ENVISAGE® powered computer system. Adjust run-times and lockouts with a NEXUS® Time Adjuster or any ENVISAGE® product.

► 4 I/O Program Type (choose one)

	Port # 1234
☐ One Combie and One Shower	(HCFS)
☐ One Combie and Flush	(HCFF)
☐ Two Cold and Two Flush	(CCFF)
☐ Four Showers	(SSSS)
☐ Four Waterclosets	(FFFF)
☐ Two Lavatories	(HCHC)
☐ Special Order - Please Contact Factory	_____

Specifications

- New Water Resistant Enclosure
- Designed for penal use and other vandal prone areas to conserve potable water consumption
- 24 VAC power with low power consumption
- Electrical telephone plug type connectors for sensor and solenoid
- Ability to be remotely located up to three hundred (300) feet from the associated fixtures
- UL Listed (E308296) and independently tested
- Adjustable program times without dip switches
- Power switch on the exterior of the housing
- Amber power LED illuminates with power
- Green LEDs illuminate at each port to show the port is active
- Red LEDs indicate block times are in effect
- Power surge protection and voltage spike protection
- Nominal Current Draw: 90mA
- Current Draw per active port: 180 mA

► Accessories

See Accessories Section of the I-CON catalog or contact our Customer Service Team for details.

MADE IN USA | LEED POINTS 7 PTS UP TO | UL | U.S. GREEN BUILDING COUNCIL MEMBER

This space is for Architect/Engineer approval

The information contained in this document is subject to change without notice.

I-CON Systems, Inc. • 3100 Camp Road, Oviedo, FL 32765 • Toll Free (800) 240-3578 • Fax (407) 365-7944 • www.i-con.com

©2012 I-CON Systems, Inc. One or more products contained herein are protected by U.S. Patent with other undergoing the patent process. Printed in the U.S.A. SEPT 2014/09

NEXUS® Model 1 I/O AC Standalone Controller

CTR-X11.3-S-01 Series

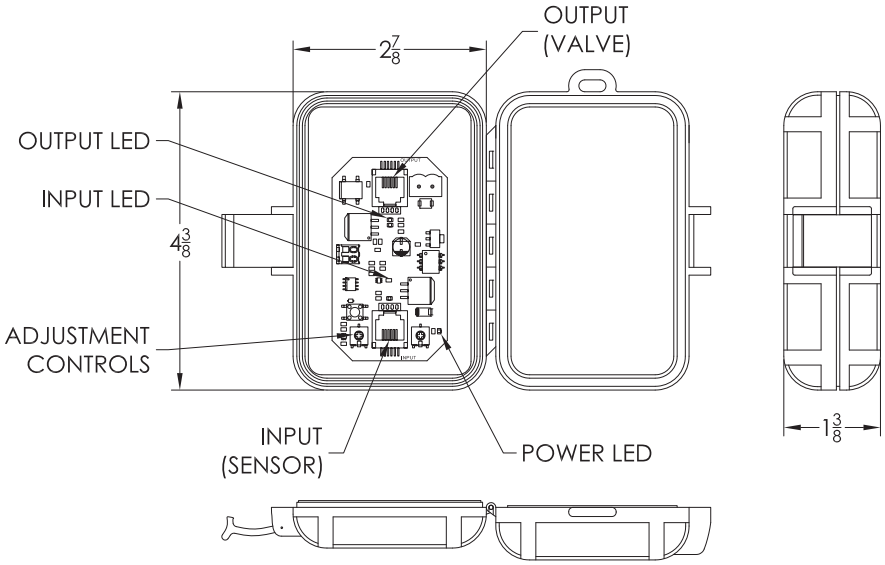

► **Description**

24VAC standalone electronic controller used to control a single pre-tempered shower, watercloset, or lavatory valve.

► **Program Type** (choose one) Port # 1

- ☐ One Cold (C)
- ☐ One Flush (F)
- ☐ One Hot (H)
- ☐ One Shower (S)
- ☐ Special Order - Please Contact Factory _____

► **Timing Adjustment Option** (choose one)

- ☐ Standard
- ☐ Custom Lockout Times (Waterclosets)
- ☐ Custom Run Times (Showers)
- ☐ Custom Lockout Times and Runtimes (WC & Shower)

► **Accessories**

See Accessories Section of the I-CON catalog or contact our Customer Service Team for details.

Specifications

- Specifically designed for penal use and other vandal prone areas to conserve potable water consumption
- 24 VAC power with low power consumption
- Electrical telephone plug type connectors for sensor and solenoid
- Ability to be remotely located up to three hundred (300) feet from the associated fixtures
- UL Listed (E308296) and independently tested
- Adjustable program times without dip switches
- Amber power LED illuminates with power
- Green LEDs illuminate at each port to show the port is active
- Red LEDs indicate block times are in effect
- Power surge protection and voltage spike protection

This space is for Architect/Engineer approval

The information contained in this document is subject to change without notice.

I-CON Systems, Inc. • 3100 Camp Road, Oviedo, FL 32765 • Toll Free (800) 240-3578 • Fax (407) 365-7944 • www.i-con.com

©2014 I-CON Systems, Inc. One or more products contained herein are protected by U.S. Patent with other undergoing the patent process. Printed in the U.S.A. OCT 2014/10

MOMENTUM® Model Electronic Retrofit Flush Valve

VLV-FVL-3801 Series

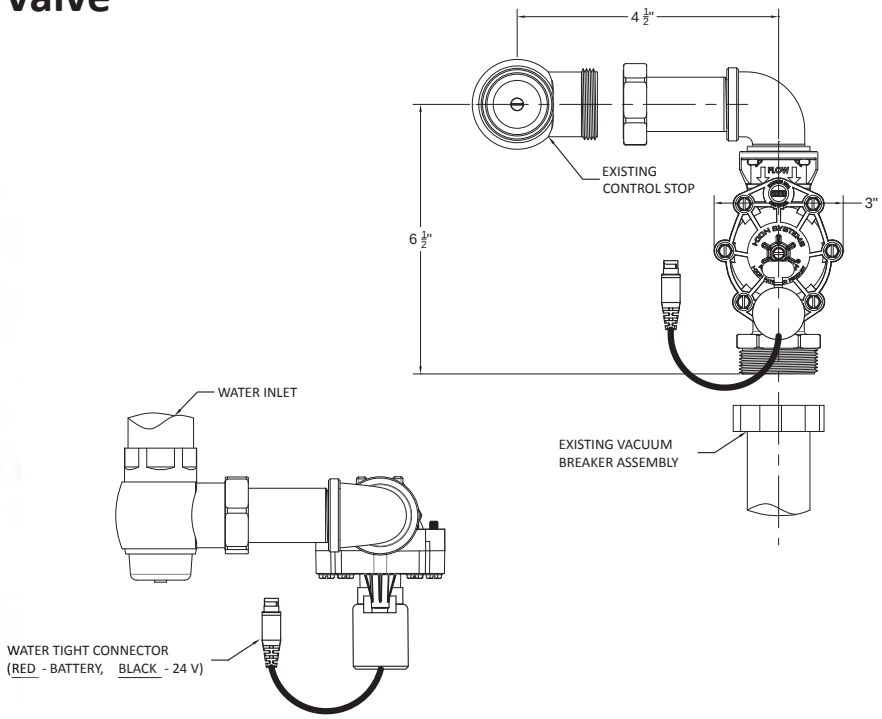

► Description

Concealed Water Closet and Urinal Flush Valve used in retrofit applications to reduce consumption and abuse.

► High Velocity Flow Rates

- 1.6 gpf on 3.5 gallon WC fixture - Low Consumption (LC)
- .9 gpf on 1.6 gallon WC fixture - Ultra High Efficient (UHE)
- .5 gpf on 1.0 gallon Urinal fixture - Low Consumption (LC)
- .125 gpf (1 pint) on Urinal fixture - Ultra High Efficient (UHE)

► Solenoid Power (choose one)

☐ 24 Volts AC
☐ 9 Volts DC (Battery Operated)

► Accessories

For additional accessories, see the Accessories Section of the I-CON catalog or contact our Customer Service Team for details.

Specifications

- Third Party Tested and approved for flushing 1.6 gallons on a 3.5 gallon fixture and .9 gallons on a 1.6 gallon fixture
- No metering diaphragms to fail and clog
- Engineered non-metallic valve body made from high strength glass filled polymer for advanced corrosion resistance
- Ability to flush using manual by-pass handle
- Straight through flow path to maximum flush velocity and provide superior force of flush
- All solenoids are interchangeable with other I-CON valves reducing spare parts
- Positive valve shut-off after pressure loss eliminating continual flush of typical flushometers
- Easily retrofits to existing inlet and outlet water piping hardware
- Flush activation adjustment to overcome calcium build-up blocking older flush jets

This space is for Architect/Engineer approval

The information contained in this document is subject to change without notice.

I-CON Systems, Inc. • 3100 Camp Road, Oviedo, FL 32765 • Toll Free (800) 240-3578 • Fax (407) 365-7944 • www.i-con.com

©2013 I-CON Systems, Inc. One or more products contained herein are protected by U.S. Patent with other undergoing the patent process. Printed in the U.S.A. JUN 2017/23

WATER CONSERVATION PRODUCTS
CORRECTIONAL APPLICATIONS

ELEMENT® Hot and Cold Model Electronic Manifold Lavatory Valve

VLV-LAV-4830 Series

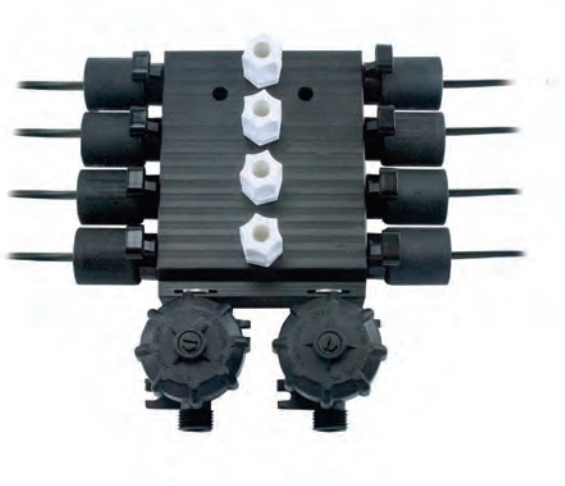

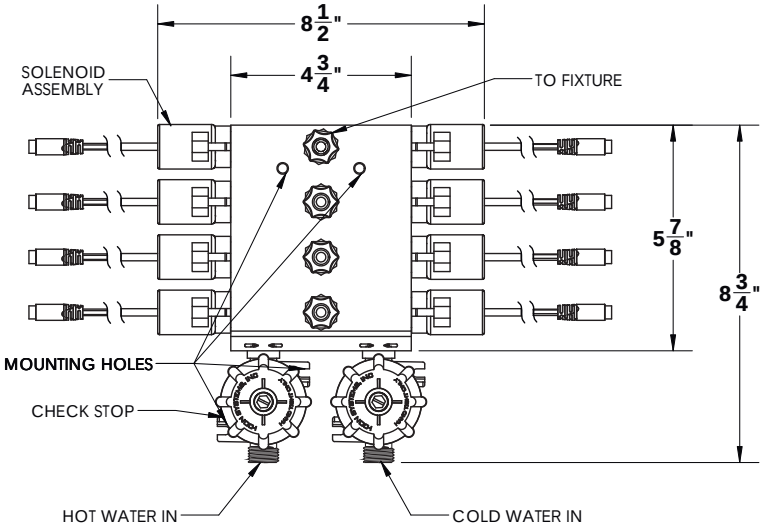

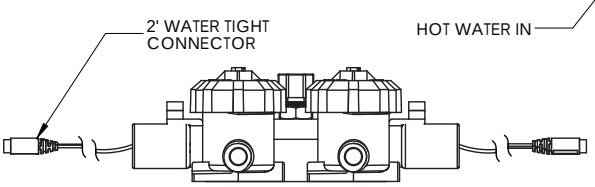

► **Description**
In-line shower valve for use with pre-tempered water.

► **Number of hot and cold lavatories** (choose one)
- ☐ One lavatory
- ☐ Two lavatories
- ☐ Four lavatories

► **Solenoid Power** (choose one)
- ☐ 24 Volts AC
- ☐ 9 Volts DC (Battery Operated)

► **Accessories**
For additional accessories, see the Accessories Section of the I-CON catalog or contact our Customer Service Team for details.

Specifications
- New pressure compensating 0.5 GPM flow regulators as standard
- New check stop retaining clips for added support and reliability
- Expandable valve solution allowing for one (1) hot and cold water supply for up to four (4) lavatories
- No metering diaphragms to fail and clog
- Engineered non-metallic polymer valve body for advanced corrosion resistance
- Ability to activate using manual by-pass handle
- All solenoids are interchangeable with other I-CON valves reducing spare parts
- Positive valve shut-off after pressure loss eliminating continual running of valve
- Maximum water temperature of 120 degrees F and maximum pressure of 100 PSI
- 1/2" NPT supply connections and 3/8" OD tubing outlet

This space is for Architect/Engineer approval

The information contained in this document is subject to change without notice.

I-CON Systems, Inc. • 3100 Camp Road, Oviedo, FL 32765 • Toll Free (800) 240-3578 • Fax (407) 365-7944 • www.i-con.com

©2012 I-CON Systems, Inc. One or more products contained herein are protected by U.S. Patent with other undergoing the patent process. Printed in the U.S.A. JUN 2015/06

Pre-Tempered Model Electronic Manifold Shower Valve

VLV-SHW-561X Series

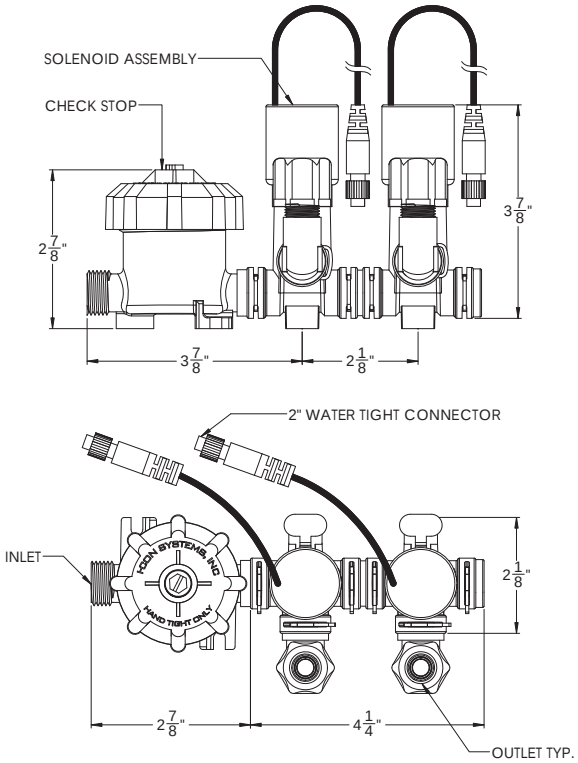

► **Description**
Shower manifold valve for use with pre-tempered water. Up to three pre-tempered showers can be supplied by one unit.

► **Number of pre-tempered showers** (choose one)
- ☐ One shower
- ☐ Two showers
- ☐ Three showers

► **Solenoid Power** (choose one)
- ☐ 24 Volts AC (High Flow)

► **Accessories**
For additional accessories, see the Accessories Section of the I-CON catalog or contact our Customer Service Team for details.

Specifications
- Expandable valve solution allowing for one (1) pre-temperd water supply for up to three (3) shower valves
- No metering diaphragms to fail and clog
- Engineered non-metallic valve body made from high strength glass filled polymer for advanced corrosion resistance
- Ability to activate using manual by-pass handle
- Advanced design allows for 1.5 GPM shower saving water over 2 GPM shower units
- All solenoid are interchangeable with other I-CON valves reducing spare parts
- Positive valve shut-off after pressure loss eliminating continual running
- Maximum water temperature of 120 degrees F and maximum pressure of 100 PSI
- 1/2” IPS compatible with 1/2” NPT

This space is for Architect/Engineer approval

The information contained in this document is subject to change without notice.

I-CON Systems, Inc. • 3100 Camp Road, Oviedo, FL 32765 • Toll Free (800) 240-3578 • Fax (407) 365-7944 • www.i-con.com

©2019 I-CON Systems, Inc. One or more products contained herein are protected by U.S. Patent with other undergoing the patent process. Printed in the U.S.A. APR 2019/01

FITTING NO.	
FCS-100	
SUBMITTED MODEL NO.	

JOB NAME	ITEM NO.

SUBMITTED AS SHOWN	
SUBMITTED AS NOTED	
SEE ATTACHED FOR SUBMITTED MODIFICATION	

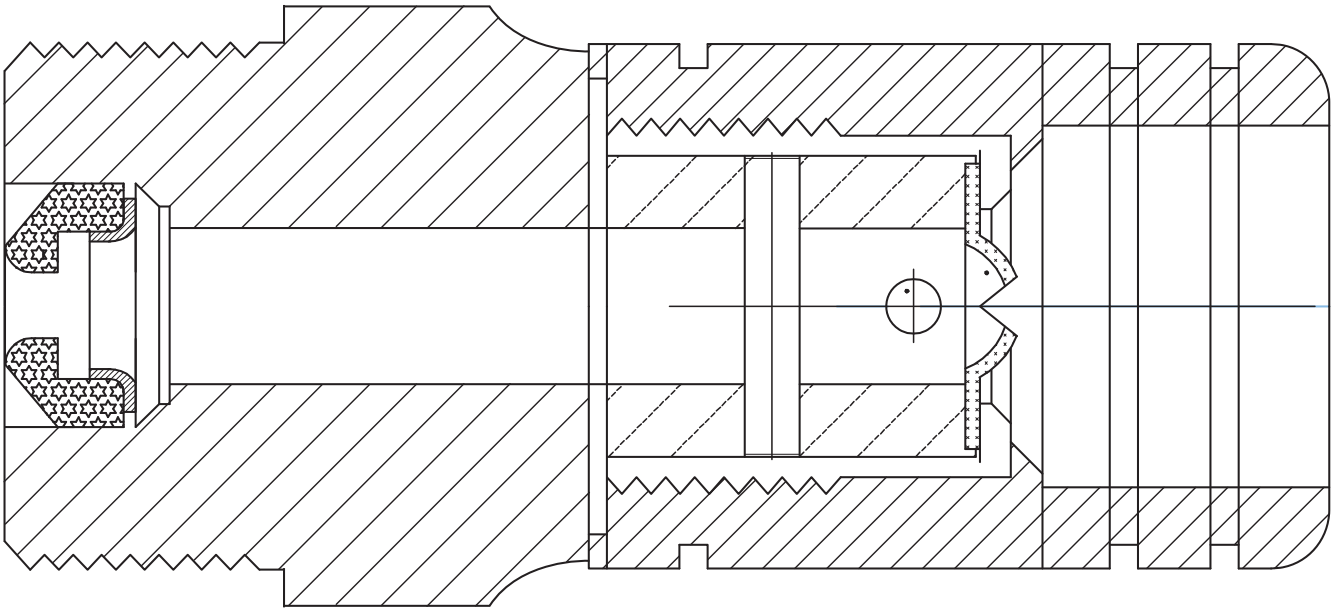

DIMENSIONS IN INCHES

TECHNICAL DATA	SPECIFICATION MANUAL

Core Drill Assembly

MHW-CDA Series

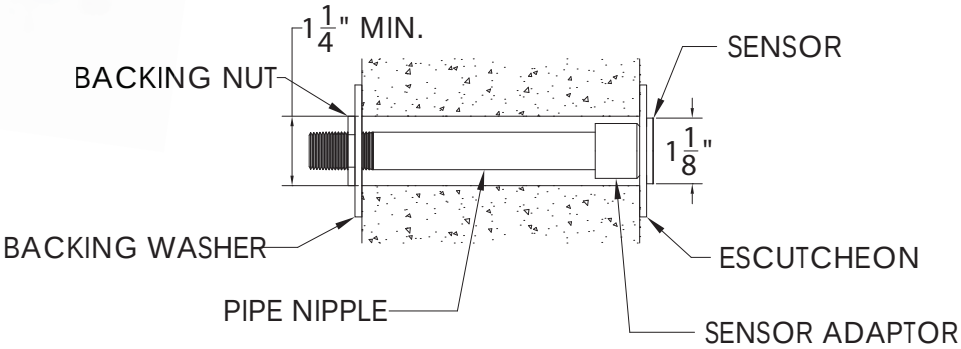

► **Description**

I-CON's Core Drill Assembly is used when there is no access to the rear of the fixture from the chase area or when controlling a water closet fixture set by itself. When retrofitting older style lavatory valves, the unit can be used to secure the fixture to the wall when the older lavatory valve and push buttons are removed.

► **Pipe Nipple Length** (choose one)

☐ 1" ☐ 2" ☐ 4" ☐ 5" ☐ 6" ☐ 8"
☐ 9" ☐ 10" ☐ 12"

► **Escutcheon Diameter** (choose one)

☐ 2-3/8" ☐ 2-7/8" ☐ 4" ☐ 6"

► **Backing Support** (choose one)

☐ 2" Backing Washer
☐ 7-3/4" Wide Backing Bar

► **Accessories**

See Accessories Section of the I-CON catalog or contact our Customer Service Team for details.

Specifications

- Stainless Steel Housing
- Part number will vary according to application and wall thicknesses

This space is for Architect/Engineer approval

The information contained in this document is subject to change without notice.

I-CON Systems, Inc. • 3100 Camp Road, Oviedo, FL 32765 • Toll Free (800) 240-3578 • Fax (407) 365-7944 • www.i-con.com

©2017 I-CON Systems, Inc. One or more products contained herein are protected by U.S. Patent with other undergoing the patent process. Printed in the U.S.A. JUL 2017/05

Lavatory Stabilizer Bracket

MHW-PLT-4002

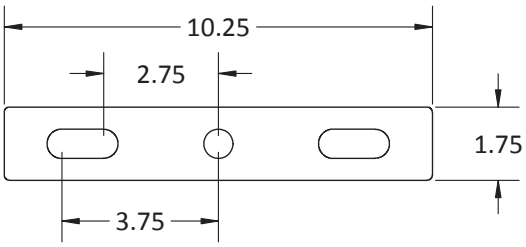

Description

I-CON's Penal Lavatory Stabilizer Bracket is used when there is no access to the rear of the fixture from the chase area or when controlling a lavatory fixture set by itself. When retrofitting older style lavatory valves, the unit can be used to secure the water supply tube while the previous lavatory valve and actuators are removed.

Specifications

- 12GA Galvanized Steel

Accessories

See Accessories Section of the I-CON catalog or contact our Customer Service Team for details.

This space is for Architect/Engineer approval

The information contained in this document is subject to change without notice.

I-CON Systems, Inc. • 3100 Camp Road, Oviedo, FL 32765 • Toll Free (800) 240-3578 • Fax (407) 365-7944 • www.i-con.com

©2019 I-CON Systems, Inc. One or more products contained herein are protected by U.S. Patent with other undergoing the patent process. Printed in the U.S.A. OCT 2019/02

Polyurethane Tubing

MHW-TB Series

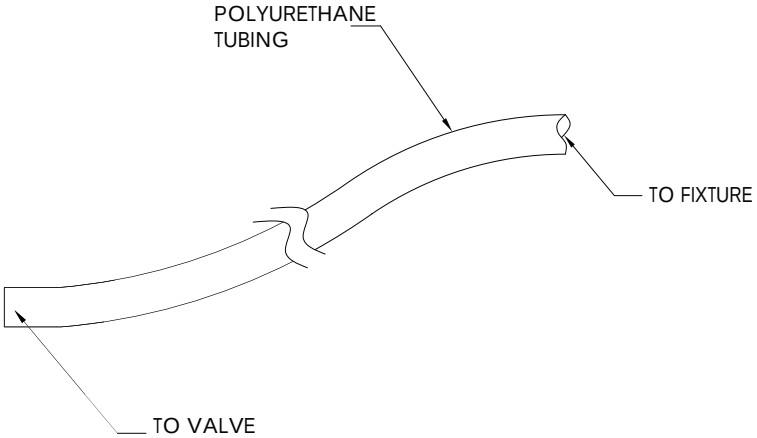

► **Description**

The I-CON Polyurethane Tubing is used to transfer water from the I-CON valve to the fixture.

Specifications

- Polyurethane Tubing
- Flexible for Installation

► **Tubing Sizes Available** (choose one or more)

- ☐ 1/4" OD; 1/8" ID; 1/16" Wall
- ☐ 3/8" OD; 1/4" ID, 1/16" Wall
- ☐ 1/2" OD; 3/8" ID; 1/16" Wall
- ☐ 5/8" OD; 1/2" ID; 1/16" Wall

► **Accessories**

See Accessories Section of the I-CON catalog or contact our Customer Service Team for details.

This space is for Architect/Engineer approval

The information contained in this document is subject to change without notice.

I-CON Systems, Inc. • 3100 Camp Road, Oviedo, FL 32765 • Toll Free (800) 240-3578 • Fax (407) 365-7944 • www.i-con.com

©2017 I-CON Systems, Inc. One or more products contained herein are protected by U.S. Patent with other undergoing the patent process. Printed in the U.S.A. JUL 2017/18

Anti Blowout Grip Ring

MHW-VB-5011-ABR

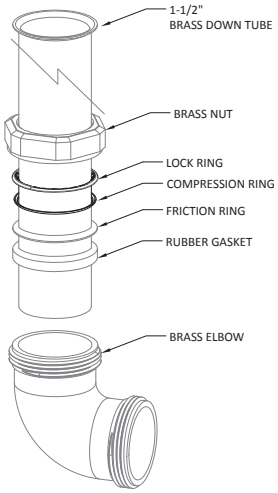

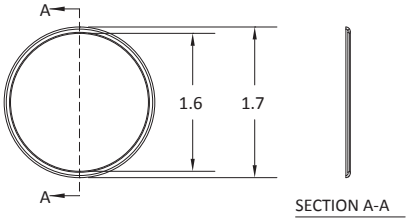

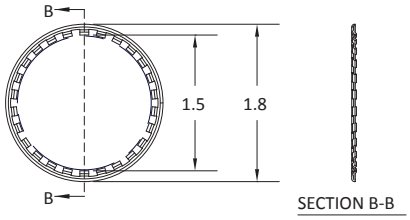

► Description

I-CON's Anti Blowout Grip Ring is designed to reduce blowout failures by increasing the holding force of a common slip joint. The two ring assembly is comprised of a lock ring with 26 teeth that bite and lock into the down tube when compressed by the compression ring. *Note: Anti Blowout Grip Rings are packaged (12) ring sets per pack.*

Specifications

- Made of stainless steel for increased strength and corrosion resistance.
- Designed for use on chrome plated, raw brass and all scratch threaded 1-1/2" vacuum breaker tubes.

► Accessories

See Accessories Section of the I-CON catalog or contact our Customer Service Team for details.

This space is for Architect/Engineer approval

The information contained in this document is subject to change without notice.

I-CON Systems, Inc. • 3100 Camp Road, Oviedo, FL 32765 • Toll Free (800) 240-3578 • Fax (407) 365-7944 • www.i-con.com

©2012 I-CON Systems, Inc. One or more products contained herein are protected by U.S. Patent with other undergoing the patent process. Printed in the U.S.A. JUL 2017/05

TruTOUCH® Model
Force Activated Touch Sensor

SEN-1501 Series

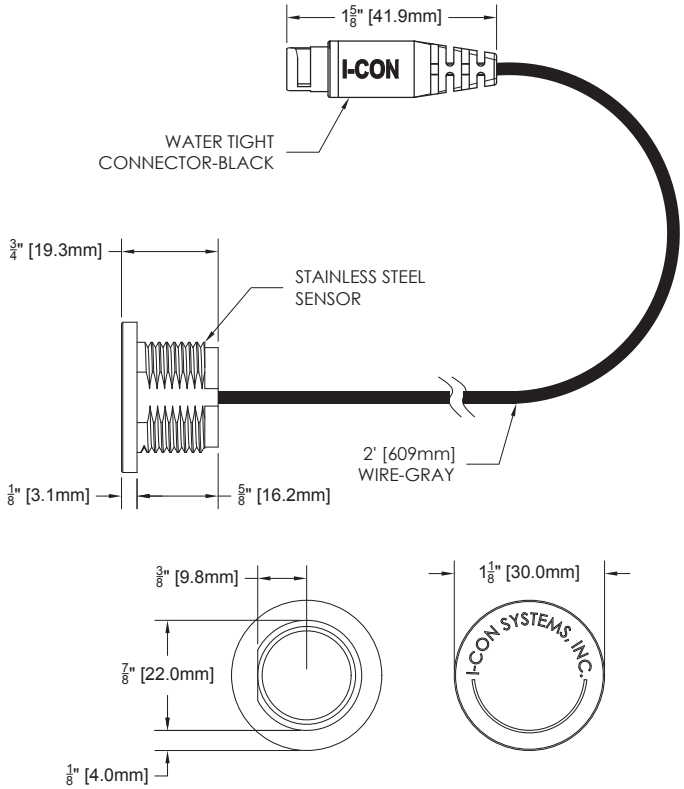

► **Description**

Fully Electronic Force Activated Sensor with no moving parts. Sensor includes a two foot lead with watertight connector. Lead cable with RJ connector is **required for operation and sold separately.** Choose from a variety of lengths below.

► **Lead Cable Length** (must choose one)

- ☐ 6' Lead Cable w/RJ Connector - WR-SEN-WT-4C-006
- ☐ 15' Lead Cable w/RJ Connector - WR-SEN-WT-4C-015
- ☐ 25' Lead Cable w/RJ Connector - WR-SEN-WT-4C-025
- ☐ 35' Lead Cable w/RJ Connector - WR-SEN-WT-4C-035
- ☐ 60' Lead Cable w/RJ Connector - WR-SEN-WT-4C-060

► **Accessories**

See Accessories Section of the I-CON catalog or contact our Customer Service Team for details.

Specifications

- Specifically designed for penal use
- Rugged, polished stainless steel housing with no internal moving parts makes the unit virtually vandal-proof
- Proven reliability with testing of over 1 million activations
- Unique design allows activation by finger pressure without compromising its sealing integrity
- Proprietary 5V DC design allowing for no power consumption until touched by operator.
- Ability to be remotely located up to three hundred (300) feet from the associated controller
- Telephone type connectors for quick and easy connection to controller
- Meets all ADA requirements
- IP 68 Protection
- Operating temperature range from -40F to 257F

This space is for Architect/Engineer approval

The information contained in this document is subject to change without notice.

I-CON Systems, Inc. • 3100 Camp Road, Oviedo, FL 32765 • Toll Free (800) 240-3578 • Fax (407) 365-7944 • www.i-con.com

©2012 I-CON Systems, Inc. One or more products contained herein are protected by U.S. Patent with other undergoing the patent process. Printed in the U.S.A. JAN 2012/01

TruTouch® Model
Force Activated LED Touch Sensor

SEN-1601 Series

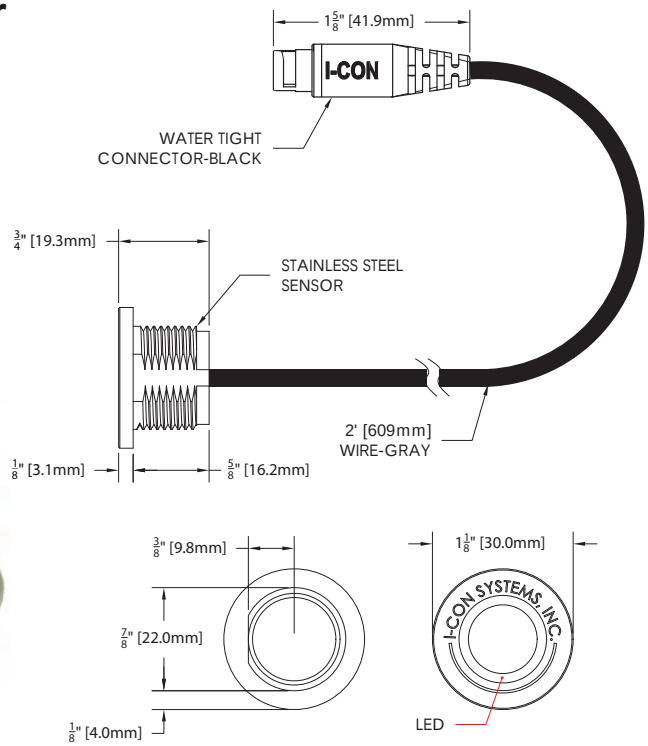

Description

Fully Electronic Force Activated LED Sensor with no moving parts. Sensor includes a two foot lead with watertight connector. Extension with RJ connector is required and is available in a variety of lengths.

LED illumination indicators:

- Solid* Green indicates port is in run mode
- Rapid flashing Red indicates Anti-Water Hammer feature
- Solid* Red indicates port is in lockout mode
- Slow flashing Red indicates maintenance mode

* *Flashing for battery operated controllers*

Cable Length (must choose one)

- ☐ 6' Lead Cable w/RJ Connector - WR-SEN-WT-6C-006
- ☐ 15' Lead Cable w/RJ Connector - WR-SEN-WT-6C-015
- ☐ 25' Lead Cable w/RJ Connector - WR-SEN-WT-6C-025
- ☐ 35' Lead Cable w/RJ Connector - WR-SEN-WT-6C-035
- ☐ 60' Lead Cable w/RJ Connector - WR-SEN-WT-6C-060

Accessories

See Accessories Section of the I-CON catalog or contact our Customer Service Team for details.

Specifications

- Specifically designed for penal use
- Rugged, polished stainless steel housing with no internal moving parts makes the unit virtually vandal-proof
- Proven reliability with testing of over 1 million activations
- Unique design allows activation by finger pressure without compromising its sealing integrity
- Proprietary 5V DC design allowing for no power consumption until touched by operator.
- Ability to be remotely located up to three hundred (300) feet from the associated controller
- Telephone type connectors for quick and easy connection to controller
- Meets all ADA requirements
- IP 68 Protection
- Operating temperature range from -40F to 257F

This space is for Architect/Engineer approval

The information contained in this document is subject to change without notice.

I-CON Systems, Inc. • 3100 Camp Road, Oviedo, FL 32765 • Toll Free (800) 240-3578 • Fax (407) 365-7944 • www.i-con.com

©2012 I-CON Systems, Inc. One or more products contained herein are protected by U.S. Patent with other undergoing the patent process. Printed in the U.S.A. MAR 2017/17

TruFIRE® Model 24VAC Solenoids

SLD-0914 Series

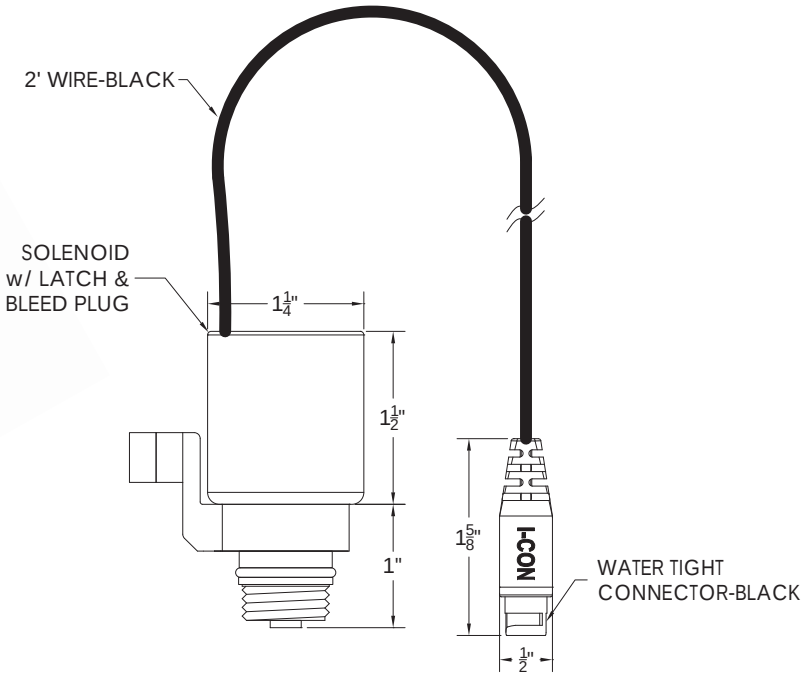

► **Description**
The I-CON TruFIRE® 24VAC Solenoid attaches to and operates any of the I-CON flush valves, lavatory valves, shower valves, and retrofit cartridges.

► **Standard Flow** (choose one)
- ☐ with No Extension (Extension Required for Use)
- ☐ 6' Extension
- ☐ 15' Extension
- ☐ 25' Extension
- ☐ 35' Extension
- ☐ 60' Extension

Specifications
- Voltage - 24VAC 50/60Hz
- Inrush Current - 0.25 AMP
- Holding Current - 0.18 AMP
- Closing Type - Slow Closing with Soft Close Feature
- Sealing Surface - EPDM
- Max. Operating Pressure - 100 PSI
- Min. Operating Pressure - Positive Close
- Max. Fluid Temperature - 120°F

► **Accessories**
See Accessories Section of the I-CON catalog or contact our Customer Service Team for details.

This space is for Architect/Engineer approval

The information contained in this document is subject to change without notice.

I-CON Systems, Inc. • 3100 Camp Road, Oviedo, FL 32765 • Toll Free (800) 240-3578 • Fax (407) 365-7944 • www.i-con.com

©2012 I-CON Systems, Inc. One or more products contained herein are protected by U.S. Patent with other undergoing the patent process. Printed in the U.S.A. MAR 2017/17

TruFIRE® Model 24VAC High Flow Solenoids

SLD-0914-HF Series

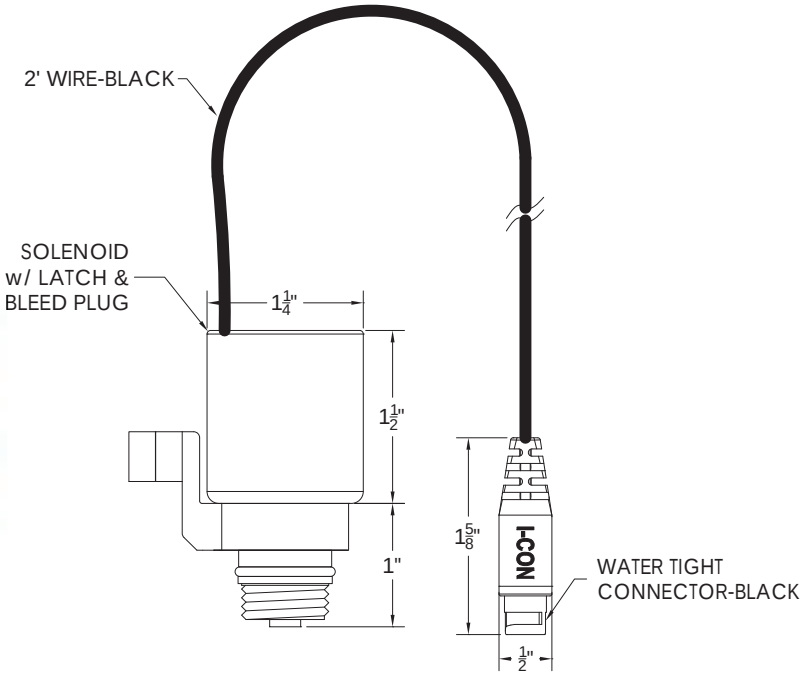

► **Description**

The I-CON TruFIRE® 24VAC High Flow Solenoid is designed for use where high water flow for lavatories or showers is required and will attach to and operates any of the I-CON flush valves, lavatory valves, shower valves, and retrofit cartridges.

► **High Flow** (choose one)

- ☐ with No Extension (Extension Required for Use)
- ☐ 6' Extension
- ☐ 15' Extension
- ☐ 25' Extension
- ☐ 35' Extension
- ☐ 60' Extension

Specifications

- Voltage - 24VAC 50/60Hz
- Inrush Current - 0.25 AMP
- Holding Current - 0.18 AMP
- Closing Type - Slow Closing with Soft Close Feature
- Sealing Surface - EPDM
- Max. Operating Pressure - 100 PSI
- Min. Operating Pressure - Positive Close
- Max. Fluid Temperature - 120°F

► **Accessories**

See Accessories Section of the I-CON catalog or contact our Customer Service Team for details.

This space is for Architect/Engineer approval

The information contained in this document is subject to change without notice.

I-CON Systems, Inc. • 3100 Camp Road, Oviedo, FL 32765 • Toll Free (800) 240-3578 • Fax (407) 365-7944 • www.i-con.com

©2012 I-CON Systems, Inc. One or more products contained herein are protected by U.S. Patent with other undergoing the patent process. Printed in the U.S.A. MAR 2017/17

Plug-In Model
28 Volt Transformer

TRS-PI-120V-1.5A

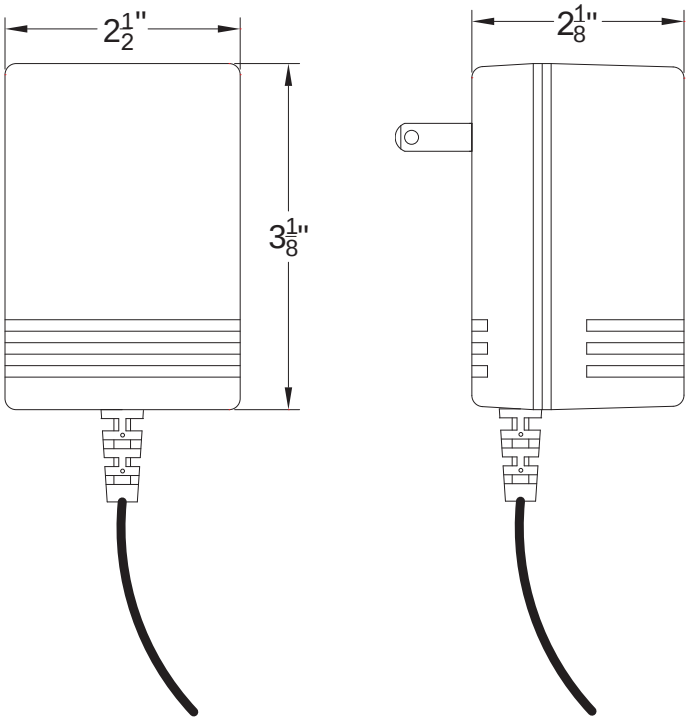

► **Description**

The Plug-In Transformer is designed to be plugged into a standard two-pronged receptacle.

► **Amperage**

1.50 Amp (1500mA) for use with all controllers.

Specifications

- Converts 120VAC, 60 Hz to 28 VAC, 60 Hz Unit
- Unit is Class 2, internally fused
- UL listed, UL file number: E82323
- Operating temperature range from -40F to 230F

► **Accessories**

See Accessories Section of the I-CON catalog or contact our Customer Service Team for details.

This space is for Architect/Engineer approval

The information contained in this document is subject to change without notice.

I-CON Systems, Inc. • 3100 Camp Road, Oviedo, FL 32765 • Toll Free (800) 240-3578 • Fax (407) 365-7944 • www.i-con.com

©2017 I-CON Systems, Inc. One or more products contained herein are protected by U.S. Patent with other undergoing the patent process. Printed in the U.S.A. MAR 2015/03

Pressure Reducing Valve

Model: BC-720-P

The BERMAD BC-720-P is a hydraulically operated, diaphragm actuated pressure reducing control valve that reduces a high upstream pressure to a lower constant downstream pressure, regardless of fluctuating demand or varying upstream pressure.

1.0 General Information:

Valve type: diaphragm actuated, double chamber

Valve pattern: Y (oblique) and angle

Available sizes: 1.5”-24”/DN40-600

Maximum working pressure: 250 or 400 psi/16 or 25 bar

End connections:

- Grooved: (OGS) ANSI/AWWA C606 (1.5”-8”/DN40-200)
- Flanged: ANSI B16.5 class #150 & #300 (1.5”-24”/DN40-600)
- Threaded: NPT/BSP (1.5”-2.5”/DN40-65)

Working temperature: water up to 140°F/65°C

2.0 Certificates:

NSF 61

NSF 372

Others:

WRAS UK | DVGW Germany | ACS France | GOST Russia | BELGAQUA Belgium | AS 5081 Australia | Watermark Australia | PZH Poland | Bulgarcontrola Bulgaria | SVGW Switzerland | ISO 9001 - 2008

Job/Owner

System No.	
Location	

Contractor

Submitted by	
Date	

Engineer

Spec Section	
Paragraph	
Approved	
Date	

The information contained in this document is subject to change without notice. BERMAD shall not be liable for any errors contained herein. All Rights Reserved. © Copyright BERMAD Control Valves.

3.0 Construction Materials:

Body, cover and partition:

- Standard: Ductile Iron
- Optional: Stainless Steel 316

Internals: Stainless Steel, Bronze and coated Steel

Bolts, nuts and studs: Stainless Steel 316

Elastomers:

- Diaphragm: EPDM, Nylon fabric-reinforced
- Seal: NBR
- O-Rings: EPDM

Control trim:

- Control accessories: Stainless Steel 316
- Tubing & fittings: Stainless Steel 316

Coating: Epoxy fusion bonded

4.0 Control Information

Pilot setting range:

- Standard: 14.5-145 psi/1-10 bar
- Other: on request

5.0 General Notes:

Recommendation: install a pressure relief valve model 73Q at downstream side

6.0 Specify When Ordering:

- Minimum and maximum flow rate (gpm/m^3/h)
- Inlet pressure (psi/bar)
- Outlet pressure - pilot settings (psi/bar)
- Body material: Ductile Iron (standard) or Stainless Steel
- End connections: grooved (standard), flanged or threaded

The information contained in this document is subject to change without notice. BERMAD shall not be liable for any errors contained herein. All Rights Reserved. © Copyright BERMAD Control Valves.

7.0 Dimensions & Weights:

7.1 Grooved Valves - ANSI/AWWA C606 (Standard)

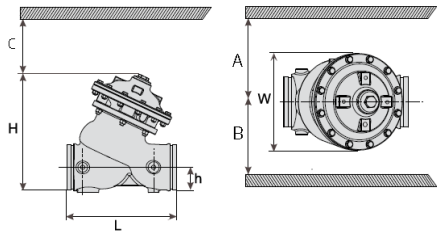

Inch	1½″	2″	2½″	3″	4″	6″	8″
L (inch)	8.07	8.07	8.46	9.84	12.60	16.34	19.69
L (mm)	205	210	215	250	320	415	500
W (inch)	4.80	4.80	4.80	6.02	7.87	11.22	14.17
W (mm)	122	122	122	153	200	285	360
h (inch)	1.30	1.30	1.56	2.36	2.91	3.74	4.92
h (mm)	33	39.5	39.5	60	74	95	125
H (inch)	7.64	7.87	7.91	10.43	12.80	17.36	21.06
H (mm)	194	200	201	265	325	441	535
Weight (lb.)	13	14	14	37	64	128	225
Weight (Kg)	6	6.2	6.5	17	29	58	102

C = H/2 A, B = Wx2

Notes:

- Clearances A & B are based on the use of both sides of the valve for control accessories. In cases where both sides are not used, the clearance of the unused side should be equal to W
- Dimensions & Weights tables refer to basic valves
- Envelope dimensions vary according to valve model
- Control loop and control accessories adds approximately 5 lbs./2.3 kg to the weight of a basic valve

The information contained in this document is subject to change without notice. BERMAD shall not be liable for any errors contained herein. All Rights Reserved. © Copyright BERMAD Control Valves.

7.2 Threaded Valves - NPT, BSP

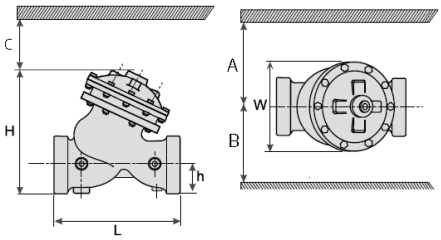

Inch	1½"	2"	2½"	3"
L (inch)	6.11	6.11	8.35	9.85
L (mm)	155	155	212	250
W (inch)	4.81	4.81	4.81	6.42
W (mm)	122	122	122	163
h (inch)	1.58	1.58	1.89	2.21
H (mm)	40	40	48	56
H (inch)	7.92	7.96	8.23	10.40
H (mm)	201	202	209	264
Weight (lb.)	12	12	18	37
Weight (Kg)	5.5	5.5	8	17

C = H/2 A, B = Wx2

7.3 Threaded Valves, Angle - NPT, BSP

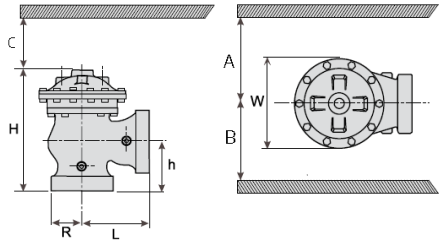

Inch	2"	2½"	3"
L (inch)	4.77	5.52	6.26
L (mm)	121	140	159
W (inch)	4.81	4.81	6.42
W (mm)	122	122	163
R ((inch)	1.58	1.89	2.17
R (mm)	40	48	55
h (inch)	3.27	4.02	4.53
h (mm)	83	102	115
H (inch)	8.87	9.53	11.58
H (mm)	225	242	294
Weight (lb.)	12	15	33
Weight (kg)	5.5	7	15

C = H/2 A, B = Wx2

Notes:

- Clearances A & B are based on the use of both sides of the valve for control accessories. In cases where both sides are not used, the clearance of the unused side should be equal to W
- Dimensions & Weights tables refer to basic valves
- Envelope dimensions vary according to valve model
- Control loop and control accessories adds approximately 5 lbs./2.3 kg to the weight of a basic valve

The information contained in this document is subject to change without notice. BERMAD shall not be liable for any errors contained herein. All Rights Reserved. © Copyright BERMAD Control Valves.

7.4 Flanged Valves

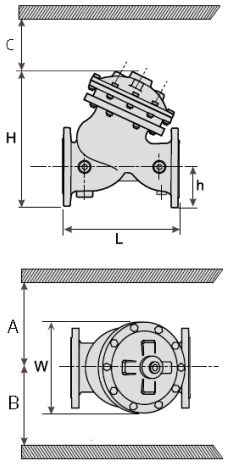

	Inch	1½"	2"	2½"	3"	4"	6"	8"	10"	12"	14"	16"	18"	20"	24"
ANSI 150# & PN 10/16	L (inch)	8.08	8.27	8.75	9.85	12.61	16.35	19.70	23.84	28.57	28.88	39.01	39.40	43.34	57.13
	L (mm)	205	210	222	250	320	415	500	605	725	733	990	1,000	1,100	1,450
	W (inch)	6.11	6.50	7.01	7.88	8.79	12.61	15.37	18.91	21.67	21.67	29.16	29.16	29.16	33.29
	W (mm)	155	165	178	200	223	320	390	480	550	550	740	740	740	845
	h (inch)	3.07	3.27	3.74	3.94	4.53	5.63	6.78	8.04	9.53	10.56	11.82	12.57	13.91	18.52
	h (mm)	78	83	95	100	115	143	172	204	242	268	300	319	358	470
	H (inch)	9.42	9.61	10.12	12.02	14.42	19.38	23.01	28.53	33.10	34.12	43.66	44.40	45.98	50.39
	H (mm)	239	244	457	305	366	492	584	724	840	866	1,108	1,127	1,167	1,279
	Weight (lb.)	20	23	29	49	82	165	276	478	816	840	1,865	2,083	2,121	2,844
	Weight (Kg)	9.1	10.6	13	22	37	75	125	217	370	381	846	945	962	1,290
ANSI 300# & PN 25	L (inch)	8.08	8.27	8.75	10.40	13.99	17.06	20.65	25.10	30.02	30.22	40.35	40.58	44.76	59.10
	L (mm)	205	210	222	264	355	433	524	637	762	767	1,024	1,030	1,136	1,500
	W (inch)	6.11	6.50	7.29	8.16	9.85	12.61	15.37	18.91	21.67	22.46	29.16	29.16	29.55	33.29
	W (mm)	155	165	185	207	250	320	390	480	550	570	740	740	750	845
	h (inch)	3.07	3.27	3.74	4.14	5.00	6.26	7.53	8.79	10.28	11.62	12.81	14.07	15.33	18.52
	h (mm)	78	83	95	105	127	159	191	223	261	295	325	357	389	470
	H (inch)	9.42	9.61	10.13	12.38	14.88	20.02	23.72	29.23	33.84	35.18	44.64	45.90	47.16	50.39
	H (mm)	239	244	257	314	278	508	602	742	859	893	1,133	1,165	1,197	1,279
	Weight (lb.)	22	27	33	55	95	187	322	540	904	957	1,984	2,132	2,174	3,289
	Weight (Kg)	10	12.2	15	25	43	85	146	245	410	434	900	967	986	1,492

C = H/2 A, B = Wx2

Notes:

- Clearances A & B are based on the use of both sides of the valve for control accessories. In cases where both sides are not used, the clearance of the unused side should be equal to W
- Dimensions & Weights tables refer to basic valves
- Envelope dimensions vary according to valve model
- Control loop and control accessories adds approximately 5 lbs./2.3 kg to the weight of a basic valve

The information contained in this document is subject to change without notice. BERMAD shall not be liable for any errors contained herein. All Rights Reserved. © Copyright BERMAD Control Valves.

7.5 Flanged Valves, Angle

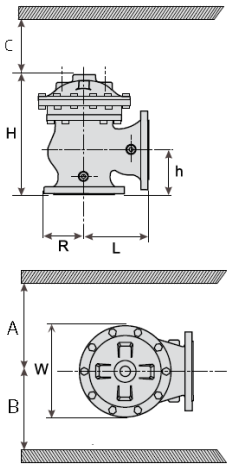

	Inch	1½″	2″	2½″	3″	4″	6″	8″	10″	12″	14″	16″	18″
ANSI 150# & PN 10/16	L (inch)	4.89	4.89	5.87	5.99	7.49	8.87	10.44	12.61	15.60	15.76	17.73	17.73
	L (mm)	124	124	149	152	190	225	265	320	396	400	450	450
	W (inch)	6.11	6.11	7.01	7.88	8.75	12.61	15.37	18.91	21.67	21.67	29.16	29.16
	W (mm)	155	155	178	200	222	320	390	480	550	550	740	740
	R (inch)	3.07	3.27	3.74	3.94	4.53	5.63	6.78	8.04	9.77	10.40	11.78	12.61
	R (mm)	78	83	95	100	115	143	172	204	248	264	299	320
	h (inch)	3.35	3.35	4.29	4.02	5.00	5.99	8.00	8.63	10.76	10.99	14.54	14.58
	h (mm)	85	85	109	102	127	152	203	219	273	279	369	370
	H (inch)	8.94	8.94	9.89	11.07	13.47	17.38	21.47	24.94	30.61	30.77	42.63	42.63
	H (mm)	227	227	251	281	342	441	545	633	777	781	1,082	1,082
	Weight (lb.)	21	22	27	44	77	157	260	452	772	816	1,764	1,808
	Weight (Kg)	9.5	10	12	21.5	35	71	118	205	350	370	800	820
ANSI 300# & PN 25	L (inch)	4.89	4.89	5.87	6.26	7.88	9.22	10.91	13.24	16.35	16.51	18.40	18.40
	L (mm)	124	124	149	159	200	234	277	336	415	419	467	467
	W (inch)	6.50	6.50	7.29	8.16	9.85	12.61	15.37	18.91	21.67	21.67	29.16	29.16
	W (mm)	165	165	185	207	250	320	390	480	550	550	740	740
	R (inch)	3.07	3.35	3.74	4.14	5.00	6.26	7.53	8.79	10.28	11.54	12.81	14.11
	R (mm)	78	85	95	105	127	159	191	223	261	293	325	358
	h (inch)	3.35	3.35	4.29	4.29	5.32	6.50	8.51	9.30	11.58	11.78	15.21	15.21
	h (mm)	85	85	109	109	135	165	216	236	294	299	386	386
	H (inch)	8.94	8.94	9.89	11.31	13.79	17.89	21.99	25.57	31.36	31.56	43.30	43.30
	H (mm)	227	227	251	287	350	454	558	649	796	801	1,099	1,099
	Weight (lb.)	24	25	30	51	90	187	304	514	860	937	1,885	1,918
	Weight (Kg)	11	11.5	13.5	23	41	81	138	233	390	425	855	870

C = H/2 A, B = Wx2

Notes:

- Clearances A & B are based on the use of both sides of the valve for control accessories. In cases where both sides are not used, the clearance of the unused side should be equal to W
- Dimensions & Weights tables refer to basic valves
- Envelope dimensions vary according to valve model
- Control loop and control accessories adds approximately 5 lbs./2.3 kg to the weight of a basic valve

The information contained in this document is subject to change without notice. BERMAD shall not be liable for any errors contained herein. All Rights Reserved. © Copyright BERMAD Control Valves.

7.6 Grooved Dual Combo Valves 72S-H - ANSI/AWWA C606 (Standard)

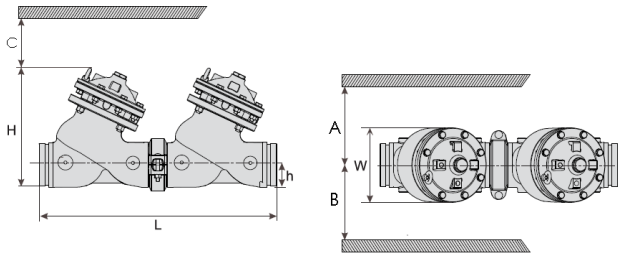

Inch	1½"	2"	2½"	3"	4"	6"	8"
L (inch)	16.14	16.14	16.92	19.68	25.20	32.68	39.38
L (mm)	410	420	430	500	640	830	1,000
W (inch)	4.80	4.80	4.80	6.02	7.87	11.22	15.35
W (mm)	122	122	122	153	200	285	360
h (inch)	1.30	1.30	1.56	2.36	2.91	3.74	4.92
h (mm)	33	33	39.5	60	74	95	125
H (inch)	7.64	7.87	7.91	10.43	12.80	17.36	21.06
H (mm)	194	200	201	265	325	441	535
Weight (lb.)	26	28	28	74	128	256	450
Weight (Kg)	12	12.4	13	34	58	116	204

C = H/2 A, B = Wx2

7.7 Flanged, Dual Combo Valves 72S-H—ANSI Class 150, PN 10/16

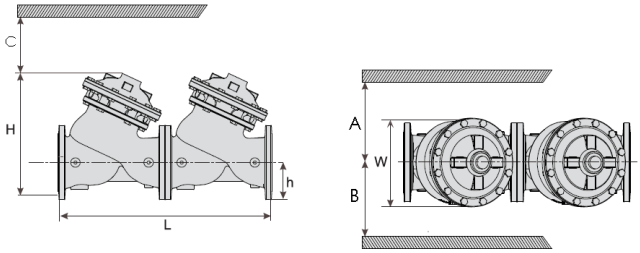

Inch	1½"	2"	2½"	3"	4"	6"	8"
L (inch)	16.16	16.54	17.50	19.70	25.22	32.70	39.40
L (mm)	410	420	444	500	640	830	1,000
W (inch)	6.11	6.50	7.01	7.88	8.79	12.61	15.37
W (mm)	155	165	178	200	223	320	390
h (inch)	3.07	3.27	3.74	3.94	4.53	5.63	6.78
h (mm)	78	83	95	100	115	143	172
H (inch)	9.42	9.61	10.12	12.02	14.42	19.38	23.01
H (mm)	239	244	257	305	366	492	584
Weight (lb.)	40	46	58	98	164	330	552
Weight (Kg)	18	21	26	44	74	150	250

C = H/2 A, B = Wx2

Notes:

- Clearances A & B are based on the use of both sides of the valve for control accessories. In cases where both sides are not used, the clearance of the unused side should be equal to W
- Dimensions & Weights tables refer to basic valves
- Envelope dimensions vary according to valve model
- Control loop and control accessories adds approximately 5 lbs./2.3 kg to the weight of a basic valve

The information contained in this document is subject to change without notice. BERMAD shall not be liable for any errors contained herein. All Rights Reserved. © Copyright BERMAD Control Valves.

8.0 Flow Properties

Inch	1½″	2″	2½″	3″	4″	6″	8″	10″	12″	14″	16″	18″	20″	24″
Cv	49	58	64	133	230	530	940	1,440	2,140	2,300	3,820	3,960	4,100	4,100
Kv	42	50	55	115	200	460	815	1,250	1,850	1,990	3,310	3,430	3,550	3,550
K	2.3	3.9	9.2	4.9	3.9	3.7	3.8	3.9	3.7	5.9	3.7	5.5	7.8	11.1
Leq feet	15	35	105	70	77	125	181	233	283	496	356	644	1,019	1,744
Leq meter	4.3	10.3	33.4	21.6	23.0	37.5	53.9	70.0	85.6	159.9	112.7	204.8	323.8	532.0

8.1 Differential Pressure Calculation (for fully open valve)

Valve flow coefficient, Kv or Cv

$$Kv(Cv) = Q\sqrt{\frac{Gf}{\Delta P}}$$

Where:

Kv = Valve flow coefficient (flow in m^3/h at 1bar ΔP)

Cv = Valve flow coefficient (flow in gpm at 1psi ΔP)
(Cv = 1.155 Kv)

Q = Flow rate (m^3/h ; gpm)

ΔP = Differential pressure (bar ; psi)

Gf = Liquid specific gravity (Water = 1.0)

Practical formulas for water:

$$Q = Kv\sqrt{\Delta P} \qquad \Delta P = \left(\frac{Q}{Kv}\right)^2$$

Flow resistance or Head loss coefficient,

$$K = \Delta H \frac{2g}{V^2}$$

Where:

K = Flow resistance or Head loss coefficient (dimensionless)

ΔH = Head loss (m ; feet)

V = Nominal size flow velocity (m/sec ; feet/sec.)

g = Acceleration of gravity (9.81 m/sec2 ; 32.18 feet/sec^2)

Practical formula:

$$\Delta H = K\frac{V^2}{2g}$$

Equivalent Pipe Length - Leq

In order to simplify system head loss calculation,
add the Leq value to the pipe length of the relevant size

Note:

The Leq values given are for general consideration only.
Actual Leq may vary somewhat with each of the valve sizes.

The information contained in this document is subject to change without notice. BERMAD shall not be liable for any errors contained herein. All Rights Reserved. © Copyright BERMAD Control Valves.

8.2 Flow Chart (US/Imperial units)

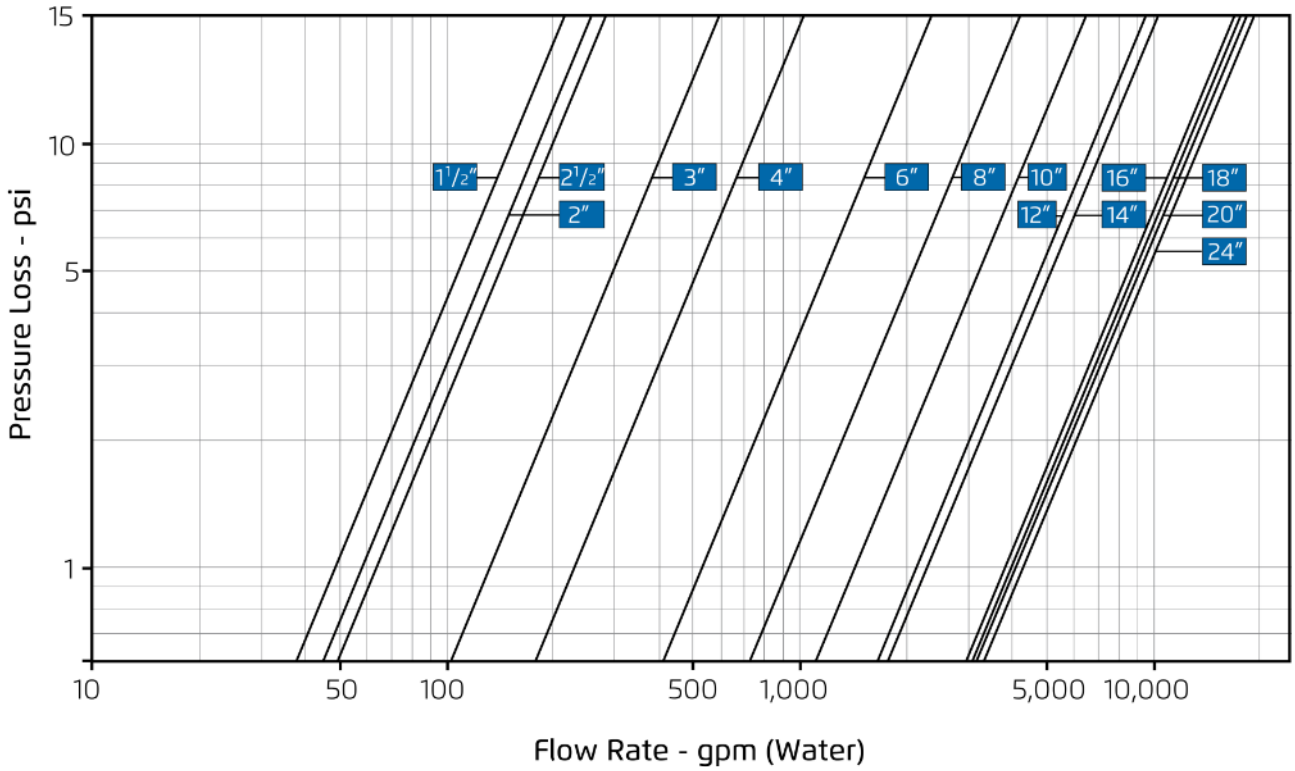

8.3 Flow Chart (SI/Metric units)

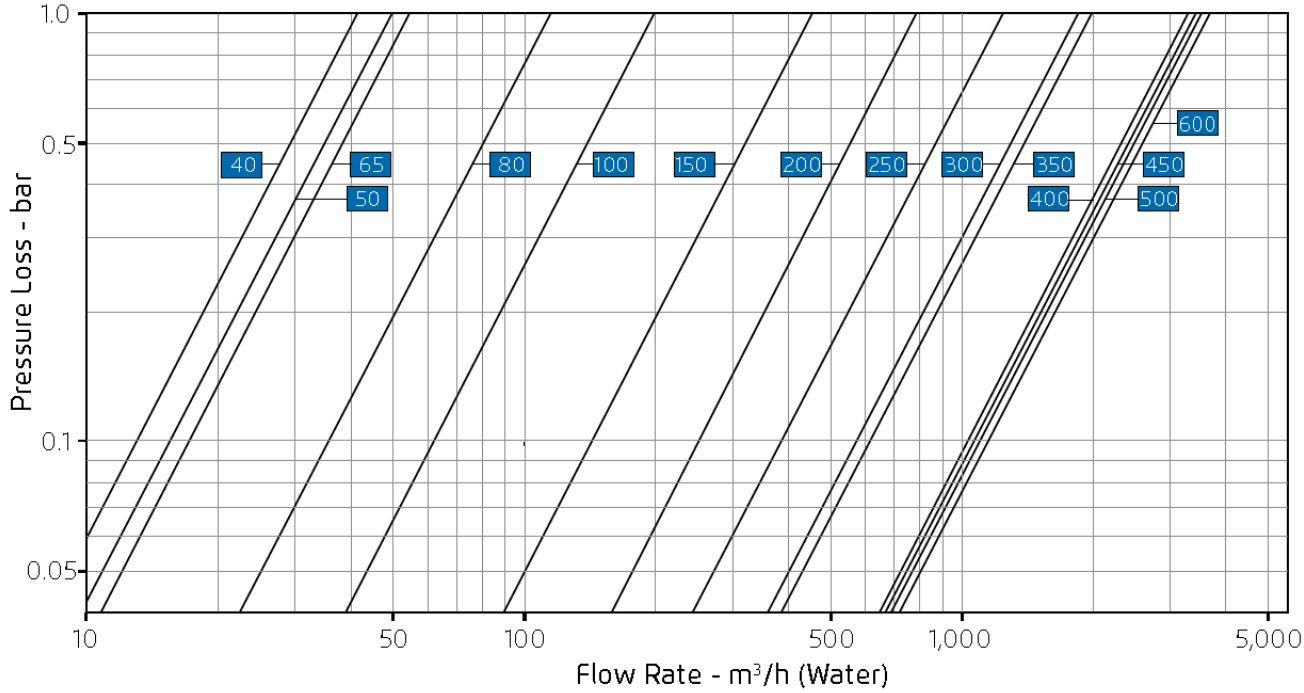

The information contained in this document is subject to change without notice. BERMAD shall not be liable for any errors contained herein. All Rights Reserved. © Copyright BERMAD Control Valves.

File Name:	Submittal BC-720-P	Rev. 01	Prepared By:	RL	Date:	11/17

Model 600XL

Water Pressure Reducing Valve with Integral By-pass Check Valve and Strainer

Application

Zurn Wilkins model 600XL is designed for installation on potable water lines to reduce high inlet pressure to a lower outlet pressure. The integral strainer makes this device most suitable for residential and commercial water systems requiring frequent cleaning because of sediment and debris. The direct acting integral by-pass design prevents buildup of excessive system pressure caused by thermal expansion. The balanced piston design enables the regulator to react in a smooth and responsive manner to changes in system flow demand, while at the same time, providing protection from inlet pressure changes.

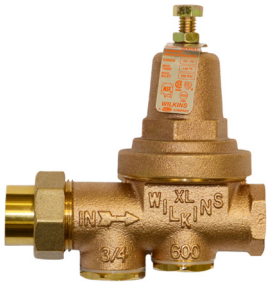

XL LEAD FREE

NSF/ANSI/CAN 61

Standards Compliance

- ASSE® Listed 1003
- IAPMO® Listed
- CSA® Certified
- City of Los Angeles Approved
- Meets the requirements of NSF/ANSI/CAN 61

Materials

Main valve body	Low Lead Cast Bronze ASTM B 584
Access covers	Low Lead Cast Bronze ASTM B 584 Low Lead Brass
Fasteners	Stainless Steel, 300 Series
Stem & plunger	Low Lead Cast Bronze ASTM B 584 Low Lead Brass
Elastomers	Buna Nitrile, (FDA Approved) EPDM, (FDA Approved)
Cap gaskets	Natural Vulcanized Fibre Acetal (Delrin™)
Strainer screen	Stainless Steel, 300 Series Strainer
Seat	Stainless Steel, 300 Series

Features

Sizes: 1/2", 3/4", 1", 1 1/4", 1 1/2", 2"

Maximum working water pressure	300 psi
Maximum working water temperature	140°F
Reduced pressure range (standard)	25 psi to 75 psi
Factory preset	50 psi
Hydrostatic test pressure	300 psi
CPVC tailpiece: Max. hot water temp.	140°F @ 100 psi
Cold water rated temp.	73.4°F @ 400 psi

Options

(Suffixes can be combined)

☐	-	standard with 20 mesh strainer screen, SU, FNPT
☐ C	-	copper sweat connection (3/4" thru 2")
☐ HR	-	75 psi to 125 psi spring range, factory set at 85 psi
☐ HLR	-	10 psi to 125 psi spring range, factory set at 50 psi
☐ HTSTSC	-	180°F maximum temp, stainless steel trim, spring, sealed cage
☐ L	-	less integral by-pass check valve
☐ LU	-	less union assembly, female x female (3/4" & 1" only)
☐ LPV	-	180°F maximum temp with 10 psi to 35 psi spring range, factory set at 20 psi
☐ SC	-	sealed cage bell housing and stainless steel adjustment screw
☐ 610XL	-	400 psi inlet rating and 75 psi to 125 psi spring range, factory set at 85 psi
☐ P	-	tapped and plugged for gauge
☐ G	-	tapped and plugged with gauge
☐ CPVC	-	CPVC tailpiece connection (1/2" - 1")
☐ CH	-	Chrome stem & plunger

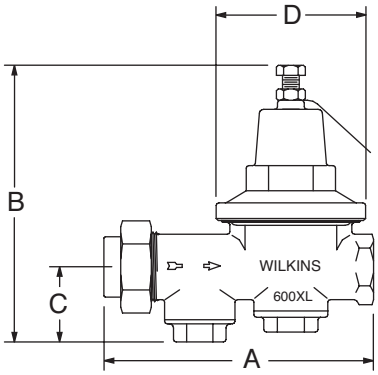

Dimensions & Weights (do not include pkg.)

SIZE		CONNECTIONS	DIMENSIONS (approximate)								WEIGHT	
			A		B		C		D			
in.	mm		in.	mm	in.	mm	in.	mm	in.	mm	lbs.	kg.
1/2	15	SINGLE UNION	5 1/2	133	6 1/4	159	1 1/4	32	2 3/4	70	3	1.5
1/2	15	LESS UNION	4 1/2	114	6 1/4	159	1 1/4	32	2 3/4	70	3	1.5
3/4	20	SINGLE UNION	5 5/16	135	5 1/2	140	1 1/4	32	2 3/4	70	3	1.5
3/4	20	LESS UNION	4 7/8	121	5 1/2	140	1 1/4	32	2 3/4	70	3	1.5
1	25	SINGLE UNION	6 1/8	156	7 1/4	184	2	51	3 3/8	86	5	2.5
1	25	LESS UNION	5 3/4	146	7 1/4	184	2	51	3 3/8	86	5	2.5
1 1/4	32	SINGLE UNION	7 1/8	181	8	203	2	51	3 7/8	100	7	3.0
1 1/2	40	SINGLE UNION	9 1/8	232	10	254	2 1/2	64	5	127	13	6.0
2	50	SINGLE UNION	10 1/4	260	12	305	3	76	6 1/2	165	21	9.5

Zurn Industries, LLC | Wilkins
1747 Commerce Way, Paso Robles, CA U.S.A. 93446 Ph. 855-663-9876, Fax 805-238-5766
In Canada | **Zurn Industries Limited**
7900 Goreway Drive, Unit 10, Brampton, Ontario L6T 5W6, 877-892-5216
www.zurn.com

Rev. H
Date: 11/19
Document No. REG-600XL
Product No. Model 600XL

Flow Characteristics

◇ Rated Flow (established by approval agencies)

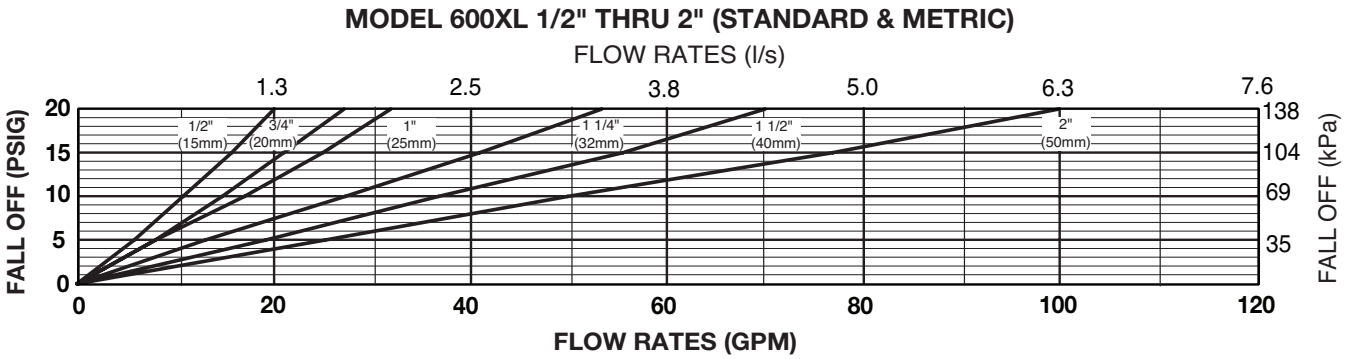

"Flow curves are based on a 50 psi pressure differential"

Typical Installation

Local codes shall govern installation requirements. Unless otherwise specified, the assembly shall be mounted in accordance with the latest edition of the Uniform Plumbing Code. The Model 600XL may be installed in any position. If installed in a pit, vault or inside application, specify the "SC" sealed cage option. Multiple installations are recommend for wide demand variations or where the desired pressure reduction is more than 4 to 1 (i.e.: 200 psi inlet reduced to 50 psi outlet). CAUTION: Anytime a reducing valve is adjusted, a pressure gauge must be used downstream to verify correct pressure setting. Do not bottom adjustment bolt on bell housing.

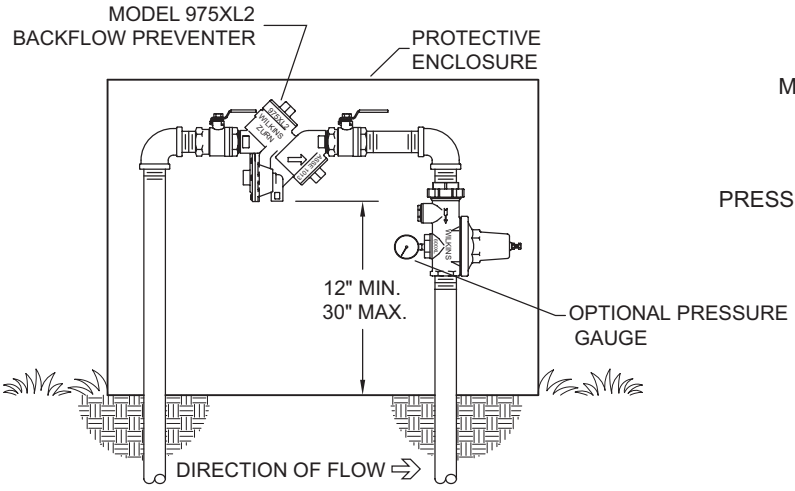

OUTDOOR INSTALLATION

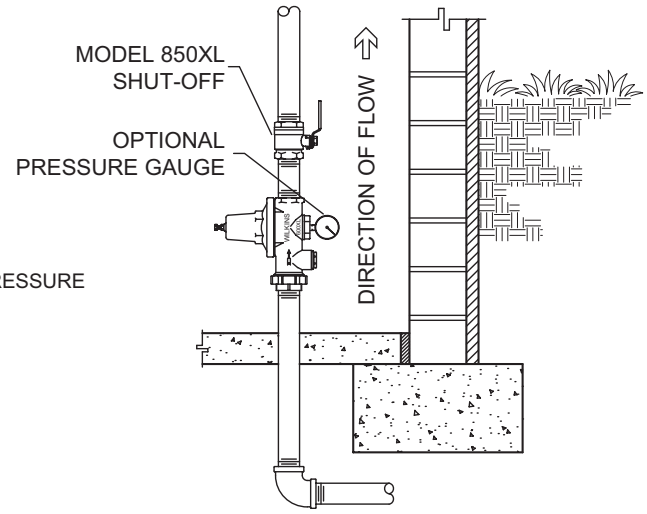

VERTICAL INSTALLATION

Specifications

The Pressure Reducing Valve shall be certified to NSF/ANSI/CAN 61, consist of a low lead bronze body and bronze bell housing, shall have separate access covers for the plunger and strainer screen and shall have a bolt to adjust the downstream pressure. The Pressure Reducing Valve shall be of the balanced piston design and shall reduce pressure in both flow and no-flow conditions. The bronze bell housing and access caps shall be threaded to the body and shall not require the use of ferrous screws. The Pressure Reducing Valve shall be a ZURN WILKINS Model 600XL.

Zurn Industries, LLC | Wilkins
1747 Commerce Way, Paso Robles, CA U.S.A. 93446 Ph. 855-663-9876, Fax 805-238-5766
In Canada | **Zurn Industries Limited**
7900 Goreway Drive, Unit 10, Brampton, Ontario L6T 5W6, 877-892-5216
www.zurn.com

PRODUCT CUT SHEETS

ECM-6 Chilled Water Plant Upgrades

Product Data

AquaEdge® High-Efficiency Variable Speed Screw Chiller 175 to 550 Nominal Tons (615 to 1934 Nominal kW)

23XRV
High-Efficiency Variable Speed Screw Chiller
with Greenspeed® Intelligence

© Carrier Corporation 2018

Features/Benefits

Quality design and construction make the AquaEdge 23XRV chillers the best choice for modern, efficient chilled water plants.

Carrier's AquaEdge® 23XRV chiller with Greenspeed® intelligence is the world's first integrated variable speed, water-cooled screw chiller. It incorporates significant breakthroughs in water-cooled chiller technology to provide excellent reliability and achieve superior efficiencies at true operating conditions without compromising the environment.

The 23XRV chiller provides:

- Variable speed, positive displacement screw compressor.
- Air-Conditioning, Heating, and Refrigerant Institute (AHRI) certified efficiencies to 0.299 kW/ton (AHRI IPLV).
- Chlorine-free HFC-134a refrigerant.
- IEEE-519 compliance for harmonic distortion with units equipped with the optional LF-2 variable frequency drive (VFD).
- An ideal solution for constant and variable flow pumping systems.

Product reliability

The 23XRV chiller uses proven technology from Carrier's existing line of AquaEdge chillers along with innovations that increase reliability. The 23XRV compressors are designed for extremely high reliability. The advanced compressor features a balanced rotor geometry and shorter screw lengths, resulting in vastly reduced compressor bearing loads and a minimum L10 compressor bearing life of 50 years when operated at AHRI conditions.

Variable speed capacity control eliminates slide valves, their associated losses, and their potential failure modes. Component count (both rotating and total) has been minimized, assuring maximum reliability under a wide range of operating conditions.

High efficiency

Per AHRI 550/590, chillers operate at design conditions less than one percent of the time. As a result, superior part load efficiency is required for today's chilled water applications. The AquaEdge® 23XRV screw chiller maximizes chiller efficiency by optimizing compressor operation. Electric power consumption drops dramatically when the motor speed slows. The 23XRV screw chiller delivers industry-leading integrated part load values (IPLV) in an extremely broad range of applications and climates. The AquaEdge chiller efficiency levels meet or exceed energy efficiency requirements of ASHRAE (American Society of Heating, Refrigerating and Air-Conditioning Engineers) 90.1-2016.

Respect for the environment

Carrier has long been committed to the environment and its sustainability. The AquaEdge 23XRV screw chillers provide our customers with a high-efficiency, chlorine-free, long-term solution unaffected by US EPA refrigerant phase outs. Carrier's decision to utilize non-ozone depleting HFC-134a refrigerant provides our customers with a safe and environmentally balanced product without compromising efficiency. In addition, HFC-134a was given an A1 safety rating by ASHRAE, meaning that it is the safest refrigerant available.

Quality design

Positive displacement compression — Positive displacement compression ensures stable operation under all load conditions without the possibility of compressor surge.

Superior oil management/cold condenser water operation — All AquaEdge 23XRV chillers regulate oil temperature, viscosity, and pressure. A patented process assures high-quality oil is delivered to the compressor bearings by a positive displacement pump. Bearing lubrication is assured, allowing continuous operation with cold condenser water at all loads. Screw chillers no longer need to rely on differential system pressure to effectively lubricate the compressor. Should the input power to the chiller be lost, the system design assures proper lubrication of the bearings during coast down.

Small footprint — The AquaEdge 23XRV chiller's positive pressure design reduces the chiller size by up to half compared to negative-pressure designs. Extremely high compression efficiencies allow for compact, high-efficiency chillers that require less mechanical room floor space.

Constant or variable evaporator flow — The 23XRV chiller combines the advantages of positive displacement compression with variable speed capacity control. This process provides a chiller that reacts substantially better than chillers equipped with inlet guide vanes or slide valves. This allows for easier transition when bringing additional chillers on line in multiple chiller plants and eliminates any possibility of surge, regardless of the changes in the system.

ASHRAE 90.1 COMPLIANT

2008 AHR EXPO®
INNOVATION AWARD
WINNER – Green Building

Table of contents

	Page
Features/Benefits	2
Model Number Nomenclature	6
Physical Data	7
Options and Accessories	11
Dimensions	12
Performance Data	14
Electrical Data	16
Controls	17
Typical Piping and Wiring	21
Control Wiring Schematic	22
Application Data	23
Guide Specifications	33

Low harmonic distortion option (with LF-2 VFD) — The AquaEdge 23XRV chiller will generate less than 5% total harmonic distortion at the input to the VFD (variable frequency drive) without the use of any external filters or line reactors. This assures the VFD alone cannot exceed IEEE-519 standard for distortion at the point of common coupling. Ultra-low harmonics can eliminate need for complicated harmonic system studies.

Low starting current (inrush) —The inrush current is limited to the chiller full load amps (rated load amperes). No other starting means can equal this level of starting current. The combination of low current and ultra-low harmonics can reduce backup generator size requirements.

0.99 power factor — The AquaEdge 23XRV chiller can operate at up to 0.99 displacement power factor (with LF-2 VFD), which helps building owners avoid power factor penalties and decreases electrical losses in cables and transformers. High power factor may also reduce KVA requirements, saving electrical system costs on new projects or freeing up electrical resources on existing systems operating near their maximum capacity.

Refrigerant-cooled VFD — The 23XRV units with Q or R compressors utilize refrigerant-cooled VFDs. Refrigerant cooling of the VFD minimizes VFD size and ensures proper cooling of the transistors for extended life. Using R-134a refrigerant instead of water also eliminates costly maintenance associated with the water cooling pump, heat exchanger, and rubber tubing used with water-cooled VFDs. The 23XRV units with P compressors utilize air-cooled VFDs.

Optional seismic kit — A seismic isolation package is available to meet International Building Code and ASCE (American Society of Civil Engineers) 7 seismic qualification requirements in concurrence with ICC ES AC156 Acceptance Criteria for Seismic Qualification by Shake-Table Testing of Nonstructural Components and Systems.

Semi-hermetic motor — The AquaEdge 23XRV chiller utilizes motors that are hermetically sealed from the machine room. Cooling is accomplished by spraying liquid refrigerant on the motor windings. This highly efficient motor cooling method results in cooler-running motors than could be realized with air-cooled designs of the same type.

In addition, Carrier's semi-hermetic design eliminates:

- Compressor shaft seals that require maintenance and increase the likelihood of refrigerant leaks.
- Machine room cooling requirements of 100 Btu/hr/ton (29.3 w/kW) and 4.6 cfm/ton (0.00212 cu m/sec/kW) associated with air-cooled motors, which dissipate heat to the mechanical room.
- High noise levels common with air-cooled motors, which radiate noise to the machine room and adjacent areas.
- Shaft alignment problems that occur with open-drive designs during start-up and operation, when equipment temperature variations cause thermal expansion.

Positive pressure design — Positive pressure designs eliminate the need for costly low pressure containment devices, reducing the initial cost of the system. The AquaEdge® 23XRV chiller's positive pressure design ensures that air, moisture, and other performance-degrading contaminants are not sucked inside the chiller. Purge

units and their associated maintenance are no longer necessary.

Optional refrigerant isolation valves — The optional refrigerant isolation valves allow the refrigerant to be stored inside the chiller during shipment from the factory, minimizing start-up time. During servicing, the "in-chiller" storage reduces refrigerant loss and eliminates time-consuming transfer procedures. As a self-contained unit, the AquaEdge 23XRV chiller does not require additional remote storage systems.

Optional unit-mounted pumpdown (Q and R compressors only) — Combined with the refrigerant isolation valves listed above, the optional pumpdown unit eliminates complex connections to portable transfer systems, thereby reducing service costs. The optional unit-mounted pumpdown compressor meets Environmental Protection Agency's (EPA) vacuum level requirements that mandate minimizing refrigerant emissions during service. (A stand-alone pumpdown is available for units with P compressors.)

Modular construction — The cooler, condenser, and compressor assemblies are bolted together, making AquaEdge 23XRV chillers ideally suited for replacement jobs where ease of disassembly and reassembly at the jobsite are essential.

Single point power — The 23XRV chiller features internal control power transformers to provide low voltage power (115 v and 24 vdc) for machine controls. Simply connecting the three input power leads to the VFD provides all unit power.

Marine container shipment — The compact design allows for open-top container shipment to export destinations, ensuring quality while reducing shipping cost.

Heat exchanger combinations — The AquaEdge 23XRV chillers are available with a complete line of heat exchangers, ensuring the best combination of chiller components to meet project specific tonnage and efficiency requirements. One, 2, and 3-pass arrangements are available to meet a wide variety of flow conditions. Nozzle-in-head and marine waterboxes are available to meet 150 psig (1136 kPa) and 300 psig (2170 kPa) piping requirements.

Heat exchanger features

ASME certified construction — An independent agency certifies the design, manufacture, and testing of all heat exchangers to American Society of Mechanical Engineers (ASME) standards, ensuring heat exchanger safety, reliability, and long life. The ASME 'U' stamp is applied to the refrigerant side of the evaporator and condenser and is applied to the water side of heat exchangers when 300 psig (2170 kPa) marine water boxes are provided.

High performance tubing — Carrier's AquaEdge chillers utilize advances in heat transfer technology, providing compact, high-efficiency heat exchangers. Tubing with advanced internally and externally enhanced geometry improves chiller performance by reducing overall resistance to heat transfer while reducing fouling.

Cooler tube expansion — Cooler tube expansion at center support sheets prevents unwanted tube movement and vibration, thereby reducing the possibility of premature tube failure. Tube wall thickness is greater at the expansion location, support sheets, and end tube sheets in order to provide maximum strength and long tube life.

Double-grooved end tube sheet holes — This design provides a more robust seal than single rolled joints, reducing the possibility of leaks between the water and refrigerant sides of the chiller.

Condenser baffle — The baffle deflects hot discharge gas before it contacts condenser tubes, reducing tube vibration and wear while distributing refrigerant more evenly over the length of the vessel for improved efficiency.

Closely spaced intermediate support sheets — Support sheets prevent tube sagging and vibration, thereby increasing heat exchanger life.

Refrigerant filter isolation valves — These valves allow filter replacement without pumping down the chiller, reducing service time and expense.

Subcooler — The subcooler, located in the bottom of the condenser, increases the refrigeration effect by cooling the condensed liquid refrigerant to a lower temperature, thereby reducing compressor power consumption. The 23XRV units with Q or R compressors utilize a FLASC (flash) style subcooler. The 23XRV units with P compressors use a sensible sub-cooler arrangement.

Flow control — The variable flow control system regulates refrigerant flow according to load conditions, providing a liquid seal at all operating conditions, eliminating unintentional hot gas bypass. The 23XRV units with Q or R compressors utilize the AccuMeter™ system, while 23XRV units with P compressors are controlled by an electronic expansion valve.

Microprocessor controls features

Direct Digital Product Integrated Control (PIC III) — Carrier's PIC III provides unmatched flexibility and functionality. Each unit integrates directly with the Carrier Comfort Network® (CCN) system, providing a solution to controls applications.

International Chiller Visual Controller (ICVC) — The ICVC provides an unparalleled ease of operation and can be configured to display English or metric values.

For convenience, a single display located on the chiller VFD panel displays chiller and VFD data. The VGA 320 x 240 element LCD (liquid crystal display) features 4 menu specific softkeys. The default display offers an all-in-one glance review of key chiller operation data, simplifying the interaction between chiller and user.

The display includes 4 standard languages:

- English
- Chinese
- Japanese
- Korean

Other languages are available (P compressor available only in English).

Automatic capacity override — This function unloads the compressor whenever key safety limits are approached, increasing unit life. This feature also allows the machine to operate at reduced capacity, rather than shut down, when key safety limits are approached.

Chilled liquid reset — Reset can be accomplished manually or automatically from the building management system. For a given capacity, reset allows operation at slower compressor speeds, saving energy when warmer chilled liquid can be used.

Demand limiting — This feature limits the power draw of the chiller during peak loading conditions. When incorporated into the Carrier Comfort Network® building automation system, a red line command holds chillers at their present capacity and prevents any other chillers from starting. If a load shed signal is received, the compressors are unloaded to avoid demand charges whenever possible.

Ramp loading — Ramp loading ensures smooth pulldown of liquid loop temperature and prevents a rapid increase in compressor power consumption during the pulldown period.

Automated controls test — The test can be executed prior to start-up to verify that the entire control system is functioning properly.

365-day real time clock — This feature allows the operator to program a yearly schedule for each week, weekends, and holidays.

Occupancy schedules — Schedules can be programmed into the controller to ensure that the chiller operates when cooling is required and remains off when not needed by the tenants or process.

Extensive service menu — Unauthorized access to the service menu can be prevented through password protection. Built-in diagnostic capabilities assist in troubleshooting and recommend proper corrective action for preset alarms, resulting in greater working time.

Alarm file — This file maintains the last 25 time-and date-stamped alarm messages in memory. This function reduces troubleshooting time and cost.

Alert file — This file maintains the last 25 alert messages in memory. This function provides prognostic information and corrective actions that can avoid unit shutdown.

Configuration data backup — Non-volatile memory provides protection during power failures and eliminates time-consuming control reconfiguration.

Model number nomenclature

23XRV 40 42 N R V AA 5 0 S

S – Special

Compressor Option
0 – Full Load Optimized
1 – Part Load Optimized

Voltage Code
3 – 380-3-60
4 – 416-3-60
5 – 460-3-60
7 – 575-3-60
9 – 380/415-3-50

Drive Code**
AA – LF-2, 440 Amps In, 442 Amps Out
BA – LF-2, 520 Amps In, 442 Amps Out
CC – LF-2, 608 Amps In, 608 Amps Out
EC – Std Tier, 575-v, 389 Amps In, 389 Amps Out
EF – Std Tier, 575-v, 469 Amps In, 469 Amps Out
R1 – Std Tier, 575-v, 269 Amps In, 269 Amps Out
R2 – Std Tier, 230 Amps In, 230 Amps Out
R3 – Std Tier, 335 Amps In, 335 Amps Out
R4 – Std Tier, 445 Amps In, 445 Amps Out

Motor Code

H	**S**
J	**T**
P	**U**
Q	**V**
R	**X**

23XRV – High Efficiency Variable Speed Screw Chiller

Cooler Size*
A1-A6
B1-B6
30-32
35-37
40-42
45-47
50-52
55-57

Condenser Size*
A1-A6
B1-B6
30-32
35-37
40-42
45-47
50-52
55-57

Economizer Option
E – With Economizer
N – No Economizer

Compressor Code†
P
Q
R

* First character denotes frame size.
† Only H and J motors are used with P compressors. Only type V motors are used with Q compressors.
**Maximum limits only. Additional application limits apply that may reduce these ampacities.

Quality Assurance
ISO 9001:2008-certified processes

Water-cooled chillers within the scope of the AHRI (Air-Conditioning, Heating, and Refrigeration Institute) Water-Cooled Chiller certification program are certified in accordance with the AHRI Water-Cooled Water-Chilling and Heat Pump Water-Heating Packages Certification Program, which is based on AHRI Standard 550/590 (I-P) and AHRI Standard 551/591 (SI). Certified units may be found in the AHRI Directory at www.ahridirectory.org.

SEISMICOMPLIANT*

* Meets IBC 2006, ASCE-7-05, CBC 2007, and OSHPD seismic requirements.

Physical data

23XRV COMPRESSOR AND MOTOR WEIGHTS

COMPRESSOR TYPE	MOTOR SIZE	ENGLISH				SI			
		Total Compressor Weight (lb)	Stator Weight (lb)	Rotor Weight (lb)	Motor Terminal Cover (lb)	Total Compressor Weight (kg)	Stator Weight (kg)	Rotor Weight (kg)	Motor Terminal Cover (kg)
P	H,J	3036	110	167	N/A	1377	50	76	N/A
Q	V	4090	370	193	39	1855	168	88	18
R	P,Q,R,S,T,U,V,X	4866	441	229	46	2207	200	104	21

MAXIMUM COMPONENT WEIGHTS

COMPONENT		FRAME 3 HEAT EXCHANGER		FRAME 4 HEAT EXCHANGER		FRAME 5 HEAT EXCHANGER		FRAME A HEAT EXCHANGER		FRAME B HEAT EXCHANGER	
		lb	kg	lb	kg	lb	kg	lb	kg	lb	kg
Isolation Valves		70	32	70	32	115	52	70	32	70	32
Suction Elbow	P Compressor	N/A	N/A	N/A	N/A	N/A	N/A	N/A	N/A	N/A	N/A
	Q Compressor	159	72	187	85	184	83	N/A	N/A	N/A	N/A
	R Compressor	179	81	237	108	232	105	N/A	N/A	N/A	N/A
Discharge Elbow/Muffler	P Compressor	N/A	N/A	N/A	N/A	N/A	N/A	584	265	584	265
	Q Compressor	597	271	597	271	597	271	N/A	N/A	N/A	N/A
	R Compressor	747	339	747	339	747	339	N/A	N/A	N/A	N/A
Vaporizer and Oil Sump		700	318	700	318	700	318	700	318	700	318
Economizer		542	246	542	246	542	246	174	79	174	79

VFD (VARIABLE FREQUENCY DRIVE) WEIGHT TABLE

DRIVE TYPE	COMPRESSOR	VOLTAGE/Hz	AMPERAGE (A)	WEIGHT (lb)
Std. Tier	P	575/60	269	1200
	P/Q/R	480/60 & 380/400/415/50	230	998
			335 & 445	1200
	Q/R	575/60	389 & 469	1650
LF2	Q/R	380-415 50/60	440	1400
		440-480 50/60	440	1500
		380-415 & 440-480 50/60	520 & 608	1800

23XRV CODE 30-57 HEAT EXCHANGER WEIGHTS

CODE	ENGLISH						SI					
	DRY RIGGING WEIGHT (lb)*		MACHINE CHARGE				DRY RIGGING WEIGHT (kg)*		MACHINE CHARGE			
	COOLER ONLY	CONDENSER ONLY	REFRIGERANT WEIGHT (lb)		LIQUID VOLUME (Gal.)		COOLER ONLY	CONDENSER ONLY	REFRIGERANT WEIGHT (kg)		LIQUID VOLUME (L)	
			WITH ECONOMIZER	WITHOUT ECONOMIZER	COOLER	CONDENSER			WITH ECONOMIZER	WITHOUT ECONOMIZER	COOLER	CONDENSER
30	4148	3617	800	650	56	56	1882	1641	363	295	212	212
31	4330	3818	800	650	64	65	1964	1732	363	295	242	246
32	4522	4023	800	650	72	74	2051	1825	363	295	273	280
35	4419	4529	910	760	61	61	2004	2054	413	345	231	231
36	4627	4758	910	760	70	72	2099	2158	413	345	265	273
37	4845	4992	910	760	80	83	2198	2264	413	345	303	314
40	5008	4962	900	750	103	110	2272	2251	408	340	390	416
41	5178	5155	900	750	111	119	2349	2338	408	340	420	451
42	5326	5347	900	750	119	129	2416	2425	408	340	450	488
45	5463	5525	1015	865	112	120	2478	2506	460	392	424	454
46	5659	5747	1015	865	122	130	2567	2607	460	392	462	492
47	5830	5967	1015	865	130	141	2644	2707	460	392	492	534
50	5827	6013	1250	1100	132	147	2643	2727	567	499	500	557
51	6053	6206	1250	1100	143	156	2746	2815	567	499	541	591
52	6196	6387	1250	1100	150	165	2810	2897	567	499	568	625
55	6370	6708	1430	1280	144	160	2889	3043	649	581	545	606
56	6631	6930	1430	1280	156	171	3008	3143	649	581	591	647
57	6795	7138	1430	1280	164	181	3082	3238	649	581	621	685

*Rigging weights are for standard tubes of standard wall thickness (Turbo-B3 and Spikefin 2, 0.025-in. [0.635 mm] wall).

NOTES:
1. Cooler includes the suction elbow and $^1/_2$ the distribution piping weight.
2. Condenser includes float valve and sump, discharge stub-out, and $^1/_2$ the distribution piping weight.
3. For special tubes refer to the 23XRV Computer Selection Program.
4. All weights for standard 2-pass NIH (nozzle-in-head) design with Victaulic grooves.

Physical data (cont)

23XRV COOLER FRAME SIZE A1-A6, B1-B6 HEAT EXCHANGER WEIGHTS

FRAME SIZE	ENGLISH			METRIC (SI)		
	Dry Rigging Wt* (lb)	Refrig. Wt (lb)	Water Wt (lb)	Dry Rigging Wt* (kg)	Refrig. Wt (kg)	Water Wt (kg)
A1	3240	270	394	1470	122	179
A2	3295	290	424	1495	132	192
A3	3395	310	477	1540	141	216
A4	3468	330	517	1573	150	235
A5	3582	360	578	1625	163	262
A6	3696	390	639	1677	177	290
B1	3481	305	450	1579	138	204
B2	3543	325	484	1607	147	220
B3	3658	355	545	1659	161	247
B4	3741	375	590	1696	170	268
B5	3871	415	660	1755	188	299
B6	4002	445	730	1815	202	331

*Rigging weights are for standard tubes of standard wall thickness (Super E3 and Spikefin 3, 0.025-in. [0.635 mm] wall).

NOTES:
1. Cooler includes the suction elbow and $^1/_2$ the distribution piping weight.
2. Condenser includes float valve and sump, discharge elbow, and $^1/_2$ the distribution piping weight.
3. All weights for standard 2-pass NIH (nozzle-in-head) design with Victaulic grooves.
4. For units with economizers add 20 lb (9 kg) to refrigerant weight.

23XRV CONDENSER FRAME SIZE A1-A6, B1-B6 HEAT EXCHANGER WEIGHTS

FRAME SIZE	ENGLISH			METRIC (SI)		
	Dry Rigging Wt* (lb)	Refrig. Wt (lb)	Water Wt (lb)	Dry Rigging Wt* (kg)	Refrig. Wt (kg)	Water Wt (kg)
A1	4124	550	394	1871	249	179
A2	4234	550	453	1921	249	205
A3	4334	550	507	1966	249	230
A4	4439	550	563	2014	249	255
A5	4580	550	639	2078	249	290
A6	4735	550	722	2148	249	327
B1	4410	625	450	2001	283	204
B2	4535	625	517	2057	283	235
B3	4649	625	579	2109	283	263
B4	4769	625	643	2163	283	292
B5	4931	625	730	2237	283	331
B6	5108	625	825	2317	283	374

*Rigging weights are for standard tubes of standard wall thickness (Super E3 and Spikefin 3, 0.025-in. [0.635 mm] wall).

NOTES:
1. Cooler includes the suction elbow and $^1/_2$ the distribution piping weight.
2. Condenser includes float valve and sump, discharge elbow, and $^1/_2$ the distribution piping weight.
3. All weights for standard 2-pass NIH (nozzle-in-head) design with Victaulic grooves.
4. For units with economizers add 20 lb (9 kg) to refrigerant weight.

ADDITIONAL WEIGHTS FOR 23XRV MARINE WATERBOXES*

150 psig (1034 kPa) MARINE WATERBOXES

FRAME	NUMBER OF PASSES	ENGLISH (lb)				SI (kg)			
		Cooler		Condenser		Cooler		Condenser	
		Steel Wgt	Water Wgt	Steel Wgt	Water Wgt	Steel Wgt	Water Wgt	Steel Wgt	Water Wgt
A,B	1	760	532	N/A	N/A	345	241	N/A	N/A
	2	400	239	454	269	181	108	206	122
	3	752	461	N/A	N/A	341	209	N/A	N/A
3	1 and 3	730	700	N/A	N/A	331	318	N/A	N/A
	2	365	350	365	350	166	159	166	159
4	1 and 3	1888	908	N/A	N/A	856	412	N/A	N/A
	2	944	482	989	452	428	205	449	205
5	1 and 3	2445	1019	N/A	N/A	1109	462	N/A	N/A
	2	1223	510	1195	499	555	231	542	226

300 psig (2068 kPa) MARINE WATERBOXES

FRAME	NUMBER OF PASSES	ENGLISH (lb)				SI (kg)			
		Cooler		Condenser		Cooler		Condenser	
		Steel Wgt	Water Wgt	Steel Wgt	Water Wgt	Steel Wgt	Water Wgt	Steel Wgt	Water Wgt
A,B	1	812	532	N/A	N/A	368	241	N/A	N/A
	2	436	239	491	269	198	108	223	122
	3	788	461	N/A	N/A	357	209	N/A	N/A
3	1 and 3	860	700	N/A	N/A	390	318	N/A	N/A
	2	430	350	430	350	195	159	195	159
4	1 and 3	2162	908	N/A	N/A	981	412	N/A	N/A
	2	1552	393	1641	393	704	178	744	178
5	1 and 3	2655	1019	N/A	N/A	1204	462	N/A	N/A
	2	1965	439	1909	418	891	199	866	190

*Add to cooler and condenser weights for total weights. Cooler and condenser weights may be found in the 23XRV Heat Exchanger Weights tables on page 7 and 8. For heat exchanger codes 30-57, the first digit of the heat exchanger code (first column) is the heat exchanger frame size.

23XRV WATERBOX COVER WEIGHTS — ENGLISH (lb)

FRAMES 3, 4, AND 5

WATERBOX DESCRIPTION	COOLER						CONDENSER					
	Frame 3		Frame 4		Frame 5		Frame 3		Frame 4		Frame 5	
	Victaulic Nozzles	Flanged	Victaulic Nozzles	Flanged	Victaulic Nozzles	Flanged	Victaulic Nozzles	Flanged	Victaulic Nozzles	Flanged	Victaulic Nozzles	Flanged
NIH,1-Pass Cover 150 psig	282	318	148	185	168	229	282	318	148	185	168	229
NIH,2-Pass Cover 150 psig	287	340	202	256	222	275	287	340	191	245	224	298
NIH,3-Pass Cover 150 psig	294	310	472	488	617	634	294	310	503	519	628	655
NIH Plain End, 150 psig	243	243	138	138	154	154	225	225	138	138	154	154
MWB End Cover, 150 psig*	243/315	243/315	138/314	138/314	154/390	154/390	225/234	225/234	138/314	138/314	154/390	154/390
NIH,1-Pass Cover 300 psig	411	486	633	709	764	840	411	486	633	709	764	840
NIH,2-Pass Cover 300 psig	411	518	626	733	760	867	411	518	622	729	727	878
NIH,3-Pass Cover 300 psig	433	468	660	694	795	830	433	468	655	689	785	838
NIH Plain End, 300 psig	294	294	522	522	658	658	270	270	522	522	658	658
MWB End Cover, 300 psig*	445/619	445/619	522/522	522/522	658/658	658/658	359/474	359/474	658/658	658/658	658/658	658/658

LEGEND

NIH — Nozzle-in-Head
MWB — Marine Waterbox

*Nozzle end weight/return end weight.

NOTE: Weight for NIH 2-pass cover, 150 psig (1034 kPa), is included in the heat exchanger weights shown on page 7.

23XRV WATERBOX COVER WEIGHTS — ENGLISH (lb) (cont)

FRAMES A AND B

WATERBOX DESCRIPTION	COOLER FRAMES A AND B		CONDENSER FRAMES A AND B	
	Victaulic Nozzles	Flanged	Victaulic Nozzles	Flanged
NIH,1-Pass Cover 150 psig	217	244	242	274
NIH,2-Pass Cover 150 psig	172	265	191	298
NIH,3-Pass Cover 150 psig	228	245	261	277
NIH/Marine Plain End, 150 psig	157	157	173	173
MWB Cover, 150 psig*	296	296	332	332
NIH,1-Pass Cover 300 psig	217	271	242	312
NIH,2-Pass Cover 300 psig	172	301	191	334
NIH,3-Pass Cover 300 psig	228	263	261	295
NIH/Marine Plain End, 300 psig	157	157	173	173
MWB Cover, 300 psig*	296	296	332	332

LEGEND

NIH — Nozzle-in-Head
MWB — Marine Waterbox

*Nozzle end weight/return end weight.

NOTE: Weight for NIH 2-pass cover, 150 psig (1034 kPa), is included in the heat exchanger weights shown on page 8.

23XRV WATERBOX COVER WEIGHTS — SI (kg)

FRAMES 3, 4, AND 5

WATERBOX DESCRIPTION	COOLER						CONDENSER					
	Frame 3		Frame 4		Frame 5		Frame 3		Frame 4		Frame 5	
	Victaulic Nozzles	Flanged	Victaulic Nozzles	Flanged	Victaulic Nozzles	Flanged	Victaulic Nozzles	Flanged	Victaulic Nozzles	Flanged	Victaulic Nozzles	Flanged
NIH,1-Pass Cover 1034 kPa	128	144	67	84	76	104	128	144	67	84	76	104
NIH,2-Pass Cover 1034 kPa	130	154	92	116	101	125	130	154	87	111	102	135
NIH,3-Pass Cover 1034 kPa	133	141	214	221	280	288	133	141	228	235	285	297
NIH Plain End, 1034 kPa	110	110	63	63	70	70	102	102	63	63	70	70
MWB End Cover, 2068 kPa*	110/143	110/143	63/142	63/142	70/177	70/177	102/106	102/106	63/142	63/142	70/177	70/177
NIH,1-Pass Cover 2068 kPa	186	220	287	322	347	381	186	220	287	322	347	381
NIH,2-Pass Cover 2068 kPa	186	235	284	332	344	393	186	235	282	331	330	398
NIH,3-Pass Cover 2068 kPa	196	212	299	315	361	376	196	212	297	313	356	380
NIH Plain End, 2068 kPa	132	132	237	237	298	298	122	122	237	237	298	298
MWB End Cover, 2068 kPa*	202/281	202/281	237/237	237/237	298/298	298/298	163/215	163/215	298/298	298/298	298/298	298/298

LEGEND

NIH — Nozzle-in-Head
MWB — Marine Waterbox

*Nozzle end weight/return end weight.

NOTE: Weight for NIH 2-pass cover, 150 psig (1034 kPa), is included in the heat exchanger weights shown on page 7.

FRAMES A AND B

WATERBOX DESCRIPTION	COOLER FRAMES A AND B		CONDENSER FRAMES A AND B	
	Victaulic Nozzles	Flanged	Victaulic Nozzles	Flanged
NIH,1-Pass Cover 1034 kPa	98	111	110	124
NIH,2-Pass Cover 1034 kPa	78	120	87	135
NIH,3-Pass Cover 1034 kPa	103	111	118	126
NIH/Marine Plain End, 1034 kPa	71	71	78	78
MWB Cover, 1034 kPa*	134	134	151	151
NIH,1-Pass Cover 2068 kPa	98	123	110	142
NIH,2-Pass Cover 2068 kPa	78	137	87	151
NIH,3-Pass Cover 2068 kPa	103	119	118	134
NIH/Marine Plain End, 2068 kPa	71	71	78	78
MWB Cover, 2068 kPa*	134	134	151	151

LEGEND

NIH — Nozzle-in-Head
MWB — Marine Waterbox

*Nozzle end weight/return end weight.

NOTE: Weight for NIH 2-pass cover, 150 psig (1034 kPa), is included in the heat exchanger weights shown on page 8.

Options and accessories

ITEM	OPTION*	ACCESSORY†
LF2 Tier VFD (Q and R compressor only)	X	
Freestanding 5% Line Reactor (for use with Std Tier VFD only)		X
Freestanding Harmonic Filter (P compressor only)		X
.028 or .035 in. (0.711 or 0.889 mm) Internally/Externally Enhanced Copper Tubing — Cooler/Condenser	X	
.028 or .035 in. (0.711 or 0.889 mm) Internally/Externally Enhanced Cupronickel Tubing — Condenser	X	
.028 or .035 in. (0.711 or 0.889 mm) Smooth Bore/Externally Enhanced Copper Tubing — Cooler/Condenser	X	
.028 or .035 in. (0.711 or 0.889 mm) Smooth Bore/Externally Enhanced Cupronickel Tubing — Condenser	X	
Flanged Cooler and/or Condenser Waterbox Nozzles**	X	
Hinged Waterboxes	X	
Marine Waterboxes, 150 psig (1034 kPa)††	X	
Marine Waterboxes, 300 psig (2068 kPa)††	X	
Nozzle-in Head Waterbox, 300 psig (2068 kPa)	X	
Waterbox Hinges***	X	
One, 2, or 3 Pass Cooler or Condenser Waterside Construction	X	
Seismic Kit	X	
Zinc Anodes	X	
100K AIC (Amp Interrupt Capacity) High Interrupt Circuit Breaker (Not Available on 575-v Std Tier Drive)	X	
Analog Voltmeter and Ammeter with 3 Phase Selector Switch (LF-2 and 575-v Std Tier VFD Only)	X	
Digital Meter Kit (Std Tier Only)	X	
BACnet††† Communication	X	
LonWorks**** Carrier Translator		X
Sensor Package		X
Refrigerant Isolation Valves	X	
Separate Storage Tank and Pumpout Unit		X
Shipped Factory Charged with Refrigerant	X	
Stand-Alone Pumpout Unit		X
Unit-Mounted Pumpout Unit (Q and R compressor only)	X	
Hot Gas Bypass	X	
Soleplate Package		X
Spring Isolator Kit		X
Customer Factory Performance Testing	X	
Export Crating	X	
Extended Warranty (North American Operations [NAO] only)	X	
Service Contract	X	

*Factory installed.
†Field installed.
**Standard waterbox nozzles are Victaulic type. Flanged nozzles are available as an option with either nozzle-in-head type waterboxes or marine waterboxes.

††Optional marine waterboxes available for 23XRV heat exchangers. Standard waterboxes for 23XRV are nozzle-in-head type, 150 psig (1034 kPa).
***Not available with all frame sizes and pass arrangements.
†††BACnet is a registered trademark of ASHRAE (American Society of Heating, Refrigerating, and Air-Conditioning Engineers).
****LonWorks is a registered trademark of Echelon Corporation.

Dimensions

23XRV HEAT EXCHANGER SIZES 30-57 DIMENSIONS
(UNIT WITH R COMPRESSOR SHOWN)

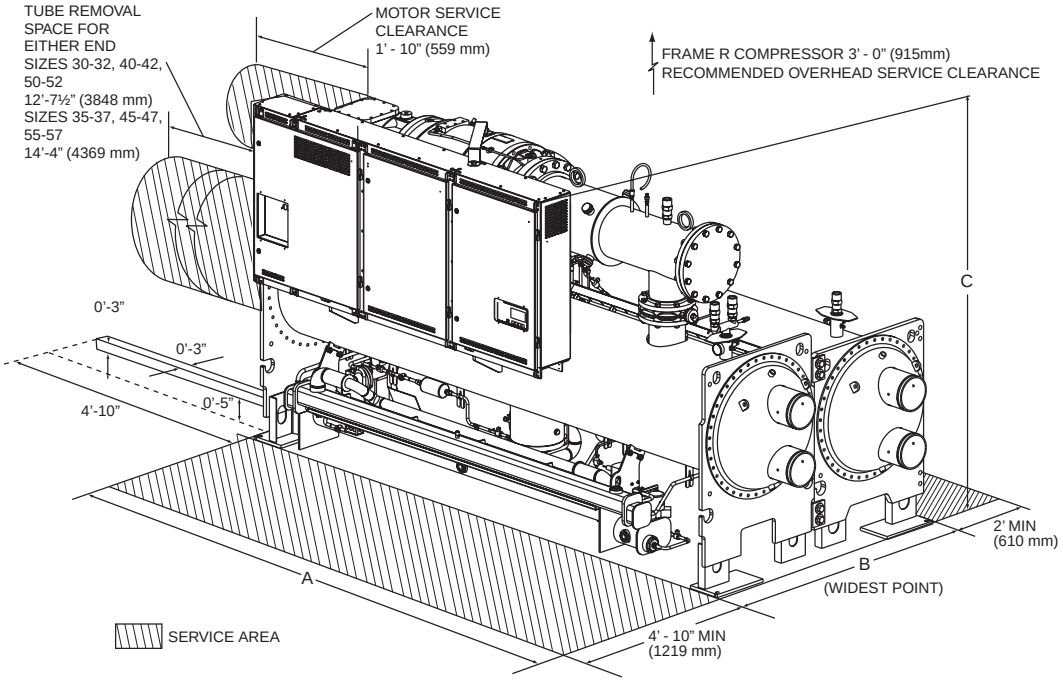

23XRV HEAT EXCHANGER SIZES 30-57 DIMENSIONS (NOZZLE-IN-HEAD WATERBOX)

HEAT EXCHANGER SIZE	A (Length, with Nozzle-in-Head Waterbox)						B (Width)	C (Height)
	1-Pass		2-Pass*		3-Pass			
	ft-in.	mm	ft-in.	mm	ft-in.	mm		
30 to 32	14- 3 1/4	4350	13- 8 1/4	4172	14- 3 1/4	4350	See unit certified drawings	
35 to 37	15-11 3/4	4870	15- 4 3/4	4693	15-11 3/4	4870		
40 to 42	14- 9	4496	14- 3 1/8	4347	14- 6	4420		
45 to 47	16- 5 1/2	5017	15-11 5/8	4867	16- 2 1/2	4940		
50 to 52	14-10	4521	14- 4 1/2	4382	14- 6 1/2	4432		
55 to 57	16- 6 1/2	5042	16- 1	4902	16- 3	4953		

23XRV HEAT EXCHANGER SIZES 30-57 DIMENSIONS (MARINE WATERBOX)

HEAT EXCHANGER SIZE	A (Length, Marine Waterbox)				B (Width)	C (Height)
	2-Pass*		1 or 3-Pass†			
	ft-in.	mm	ft-in.	mm		
30 to 32	14- 9	4496	16- 4 3/4	4997	See unit certified drawings	
35 to 37	16- 5 1/2	5017	18- 1 1/4	5518		
40 to 42	15- 2 3/4	4642	16- 3 1/4	5086		
45 to 47	16-11 3/4	5163	18- 4 3/4	5607		
50 to 52	15- 3 1/2	4661	16- 8 1/2	5093		
55 to 57	17- 0	5182	18- 5	5613		

*Assumes both cooler and condenser nozzles on same end of chiller.
†One or 3-pass length applies if cooler is a one or 3-pass design.

NOTES:
1. Service access should be provided per American Society of Heating, Refrigerating, and Air-Conditioning Engineers (ASHRAE) 15, latest edition, National Fire Protection Association (NFPA) 70, and local safety code.
2. Allow at least 3 ft (915 mm) overhead clearance for service rigging for the compressor.
3. Certified drawings available upon request.
4. Marine waterboxes may add 6 in. (152 mm), to the width of the machine. See certified drawings for details.
5. 'A' length and 'B' width dimensions shown are for standard 150 psig (1034 kPa) design and Victaulic connections. The 300 psig (2068 kPa) design and/or flanges will add length. See certified drawings.
6. Dished head waterbox covers not available for the 3-pass design.

23XRV HEAT EXCHANGER FRAME SIZES A,B DIMENSIONS
(UNIT WITH P COMPRESSOR SHOWN)

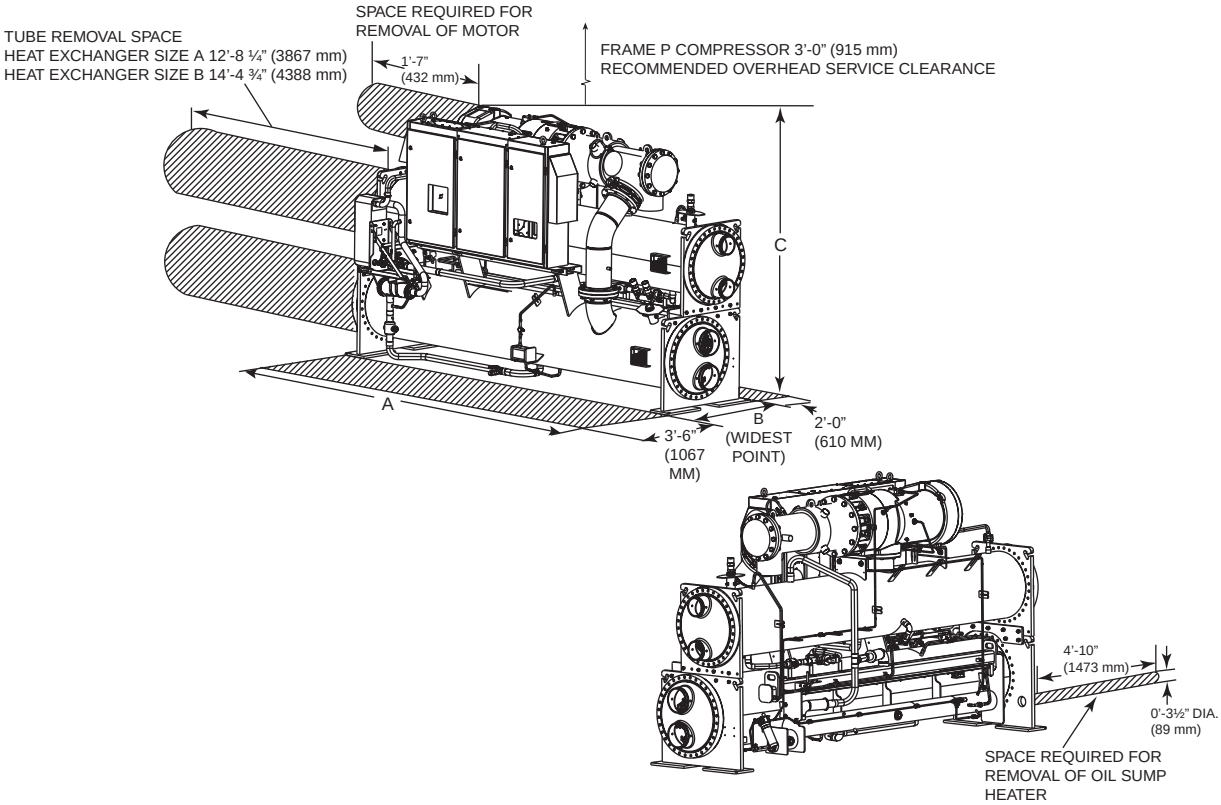

23XRV HEAT EXCHANGER SIZES A,B DIMENSIONS (NOZZLE-IN-HEAD WATERBOX)

HEAT EXCHANGER SIZE	A (LENGTH)*						B (WIDTH)	C (HEIGHT)
	1-PASS		2-PASS		3-PASS			
	ft-in.	mm	ft-in.	mm	ft-in.	mm		
A	14- 6 3/4	4439	14- 1 1/4	4301	14- 6 3/4	4439	See unit certified drawings	
B	16- 3 1/4	4959	15- 9 3/4	4822	16- 3 1/4	4959		

*1 or 3 pass length applies if either (or both) cooler or condenser is a 1 or 3 pass design. The 2-pass length assumes both cooler and condenser nozzles on same end of chiller.

NOTES:
1. Service access should be provided per American Society of Heating, Refrigerating, and Air-Conditioning Engineers (ASHRAE) 15, latest edition, National Fire Protection Association (NFPA) 70, and local safety code.
2. Allow at least 3 ft (915 mm) overhead clearance for service rigging for compressor.
3. Certified drawings available upon request.
4. Marine waterboxes may add 6 in. (152 mm) to the width of the machine. See certified drawings for details.
5. 'A' length dimensions shown are for standard 150 psig (1034 kPa) design and Victaulic connections. The 300 psig (2068 kPa) design and/or flanges will add length. See certified drawings.
6. Dished head waterbox covers are available only for 2-pass design.

23XRV HEAT EXCHANGER SIZES A,B DIMENSIONS (MARINE WATERBOX)

HEAT EXCHANGER SIZE	A (LENGTH)*						B (WIDTH)	C (HEIGHT)
	1-PASS		2-PASS		3-PASS			
	ft-in.	mm	ft-in.	mm	ft-in.	mm		
A	15- 9	4801	14- 6 1/2	4435	15- 5	4699	See unit certified drawings	
B	17- 5 1/2	5322	16- 3	4955	17- 1 1/2	5220		

*1 or 3 pass length applies if either (or both) cooler or condenser is a 1 or 3 pass design. The 2-pass length assumes both cooler and condenser nozzles on same end of chiller.

NOTES:
1. Service access should be provided per American Society of Heating, Refrigerating, and Air-Conditioning Engineers (ASHRAE) 15, latest edition, National Fire Protection Association (NFPA) 70, and local safety code.
2. Allow at least 3 ft (915 mm) overhead clearance for service rigging for the compressor.
3. Certified drawings available upon request.
4. Marine waterboxes may add 6 in. (152 mm) to the width of the machine. See certified drawings for details.
5. 'A' length dimensions shown are for standard 150 psig (1034 kPa) design and Victaulic connections. The 300 psig (2068 kPa) design and/or flanges will add length. See certified drawings.

NOZZLE SIZE

FRAME SIZE	NOZZLE SIZE (in.) (Nominal Pipe Size)					
	Cooler			Condenser		
	1-Pass	2-Pass	3-Pass	1-Pass	2-Pass	3-Pass
3	10	8	6	10	8	6
4	10	8	6	10	8	6
5	10	8	6	10	10	8
A1-A3, B1-B3 NIH	8	6	6	8	6	6
A4-A6, B4-B6 NIH	8	6	6	10	8	6
A,B Marine	8	6	6	N/A	6	N/A

NIH — Nozzle-in-Head

23XRV HEAT EXCHANGER FRAME SIZES 3-5 MIN/MAX FLOW RATES*

ENGLISH (GPM)

COOLER		1-PASS		2-PASS		3-PASS	
Frame	Size	Min	Max	Min	Max	Min	Max
3	30	611	2444	305	1222	204	815
	31	733	2933	367	1466	244	978
	32	855	3422	428	1710	285	1141
	35	611	2444	305	1222	204	815
	36	733	2933	367	1466	244	978
	37	855	3422	428	1710	285	1141
4	40	989	3959	495	1979	330	1320
	41	1112	4448	556	2224	371	1482
	42	1222	4888	611	2444	407	1775
	45	989	3959	495	1979	330	1320
	46	1112	4448	556	2224	371	1482
	47	1222	4888	611	2444	407	1775
5	50	1316	5267	658	2634	439	1756
	51	1482	5927	741	2964	494	1976
	52	1586	6343	793	3171	529	2114
	55	1316	5267	658	2634	439	1756
	56	1482	5927	741	2964	494	1976
	57	1586	6343	793	3171	529	2114

CONDENSER		1-PASS		2-PASS		3-PASS	
Frame	Size	Min	Max	Min	Max	Min	Max
3	30	646	2582	323	1291	215	861
	31	791	3162	395	1581	263	1054
	32	932	3731	466	1865	311	1244
	35	646	2582	323	1291	215	861
	36	791	3162	395	1581	263	1051
	37	932	3731	466	1865	311	1244
4	40	1096	4383	548	2192	365	1461
	41	1235	4940	618	2470	412	1647
	42	1371	5485	686	2743	457	1828
	45	1096	4383	548	2192	365	1461
	46	1235	4940	618	2470	412	1647
	47	1371	5485	686	2743	457	1828
5	50	1507	6029	754	3015	502	2010
	51	1646	6586	823	3293	549	2195
	52	1783	7131	891	3565	594	2377
	55	1507	6029	754	3015	502	2010
	56	1646	6586	823	3293	549	2195
	57	1783	7131	891	3565	594	2377

*Flow rates based on standard tubes in the cooler and condenser. Minimum flow based on tube velocity of 3 ft/sec (0.91 m/sec); maximum flow based on tube velocity of 12 ft/sec (3.66 m/sec). Consult the factory if variable primary flow.

SI (L/s)

COOLER		1-PASS		2-PASS		3-PASS	
Frame	Size	Min	Max	Min	Max	Min	Max
3	30	38	154	19	77	13	51
	31	46	185	23	92	15	62
	32	54	215	27	108	18	72
	35	38	154	19	77	13	51
	36	46	185	23	92	15	62
	37	54	215	27	108	18	72
4	40	62	249	31	125	21	83
	41	70	281	35	140	23	93
	42	77	307	38	154	26	112
	45	62	249	31	125	21	93
	46	70	281	35	140	23	93
	47	77	307	38	154	26	112
5	50	83	332	42	166	28	111
	51	93	374	47	187	31	125
	52	100	400	50	200	33	133
	55	83	332	42	166	28	111
	56	93	374	47	187	31	125
	57	100	400	50	200	33	133

CONDENSER		1-PASS		2-PASS		3-PASS	
Frame	Size	Min	Max	Min	Max	Min	Max
3	30	41	163	20	81	14	54
	31	50	199	25	100	17	67
	32	59	235	29	118	20	79
	35	41	163	20	81	14	54
	36	50	199	25	100	17	67
	37	59	235	29	118	20	79
4	40	69	277	35	138	23	92
	41	78	312	39	156	26	104
	42	86	346	43	173	29	115
	45	69	277	35	138	23	92
	46	78	312	39	156	26	104
	47	86	346	43	173	29	115
5	50	95	380	48	190	32	127
	51	104	416	52	208	35	138
	52	112	450	56	225	37	150
	55	95	380	48	190	32	127
	56	104	416	52	208	35	138
	57	112	450	56	225	37	150

*Flow rates based on standard tubes in the cooler and condenser. Minimum flow based on tube velocity of 3 ft/sec (0.91 m/sec); maximum flow based on tube velocity of 12 ft/sec (3.66 m/sec). Consult the factory if variable primary flow.

23XRV HEAT EXCHANGER FRAME SIZES A,B MIN/MAX FLOW RATES*

ENGLISH (GPM)

COOLER	1-PASS		2-PASS		3-PASS	
Frame	Min	Max	Min	Max	Min	Max
A1/B1	492	1968	246	984	164	656
A2/B2	529	2114	264	1057	176	705
A3/B3	596	2383	298	1192	199	794
A4/B4	645	2579	322	1289	215	860
A5/B5	721	2884	361	1442	240	961
A6/B6	797	3190	399	1595	266	1063

CONDENSER	1-PASS		2-PASS		3-PASS	
Frame	Min	Max	Min	Max	Min	Max
A1/B1	587	2346	293	1173	196	782
A2/B2	672	2689	336	1344	224	896
A3/B3	739	2957	370	1479	246	986
A4/B4	810	3239	405	1619	270	1080
A5/B5	904	3617	452	1809	301	1206
A6/B6	1008	4033	504	2016	336	1344

*Flow rates based on standard tubes in the cooler and condenser. Minimum flow based on tube velocity of 3 ft/sec (0.91 m/sec); maximum flow based on tube velocity of 12 ft/sec (3.66 m/sec). Consult the factory if variable primary flow.

SI (L/s)

COOLER	1-PASS		2-PASS		3-PASS	
Frame	Min	Max	Min	Max	Min	Max
A1/B1	31	124	16	62	10	41
A2/B2	33	133	17	67	11	44
A3/B3	38	150	19	75	13	50
A4/B4	41	163	20	81	14	54
A5/B5	45	182	23	91	15	61
A6/B6	50	201	25	101	17	67

CONDENSER	1-PASS		2-PASS		3-PASS	
Frame	Min	Max	Min	Max	Min	Max
A1/B1	37	148	18	74	12	49
A2/B2	42	170	21	85	14	57
A3/B3	47	187	23	93	15	62
A4/B4	51	204	26	102	17	68
A5/B5	57	228	29	114	19	76
A6/B6	64	254	32	127	21	85

*Flow rates based on standard tubes in the cooler and condenser. Minimum flow based on tube velocity of 3 ft/sec (0.91 m/sec); maximum flow based on tube velocity of 12 ft/sec (3.66 m/sec). Consult the factory if variable primary flow.

Electrical data

VFD FRAME SIZES

DRIVE CODE	MAX INPUT CURRENT*	MAX OUTPUT CURRENT*
AA (LF-2)	440	442
BA (LF-2)	520	442
CC (LF-2)	608	608
EC (575-v Std Tier)†	389	389
EF (575-v Std Tier)†	469	469
R1 (575-v Std Tier)**	269	269
R2 (Std Tier)	230	230
R3 (Std Tier)	335	335
R4 (Std Tier)	445	445

*Maximum limits only. Additional application limits apply that will reduce these ampacities.

†Available with Q and R compressors only.
**Available with P compressor only.

AUXILIARY RATINGS*

ITEM	VOLTAGE	FLA	WATTS
Oil Pump	115	1.13	130
Oil Sump Heater	115	4.35	500
Oil Sump Heater (P Compressor, 2nd Stage)	115	8.70	1000
Oil Vaporizer Heater	115	13.00	1500

LEGEND
FLA — Full Load Amps

*Factory wired to VFD.

Controls

Microprocessor controls

Microprocessor controls provide the safety, interlock, capacity control, indications, and accessibility necessary to operate the chiller in a safe and efficient manner.

Control system

The microprocessor control on each Carrier chiller is factory mounted, factory wired, and factory tested to ensure machine protection and efficient capacity control. In addition, the program logic ensures proper starting, stopping, and recycling of the chiller and provides a communication link to the Carrier Comfort Network® (CCN) system.

Features

Control system

- Component test and diagnostic check
- Programmable recycle allows chiller to recycle at optimum loads for decreased operating costs
- Menu-driven keypad interface for status display, set point control, and system configuration
- CCN-system compatible
- Primary and secondary status messages
- Individual start/stop schedules for local and CCN operation modes
- Recall of up to 25 alarm messages and 25 alert messages with diagnostic help
- Two chiller lead/lag with third chiller standby is standard in the PIC III software
- Optional soft stop unloading decreases compressor speed to unload the motor to the configured amperage level prior to stopping
- Languages pre-programmed at factory for English, Chinese, Japanese, Korean (P compressor available only in English)
- ILT (International Language Translator) available for conversion of extended ASCII characters

Safety cutouts

- Motor high temperature*†
- Refrigerant (condenser) high pressure*†
- Refrigerant (cooler) low temperature*†
- Lube oil low pressure*
- Compressor (refrigerant) high discharge temperature*
- Under voltage**
- Over voltage**
- Cooler and condenser liquid flow
- Motor overload†
- Motor acceleration time
- Intermittent power loss**
- Motor stall protection
- Low level ground fault
- Cooler and condenser freeze prevention*
- Low oil temperature
- Motor current imbalance
- Motor rotation reversal
- Excessive motor amps
- Motor starts limit
- VFD speed out of range
- High VFD inverter temperature*†
- DC bus voltage (Low/High)

Capacity control

- Leaving chilled liquid control
- Entering chilled liquid control
- Soft loading control by temperature or load ramping
- Hot gas bypass valve (optional)
- Power (demand) limiter
- Automatic chilled liquid reset (3 methods)
- Manual speed control

Interlocks

- Manual/automatic remote start
- Starting/stopping sequence
  - Pre-lube/post-lube
  - Pre-flow/post-flow
- Compressor run interlock
- Pre-start check of safeties and alerts
- Low chilled liquid (load) recycle
- Monitor/number compressor starts and run hours
- Manual reset of safeties

Indications

- Chiller operating status message
- Power-on
- Pre-start diagnostic check
- Compressor motor amps
- Alert (pre-alarm)††
- Alarm
- Contact for remote alarm
- Safety shutdown messages
- Elapsed time (hours of operation)
- Chiller input kW
- Demand kW

Drive control parameters

- Compressor 100% speed (Hz)
- Motor rated load kW
- Motor rated load amps
- Motor nameplate amps
- Motor nameplate RPM
- Motor nameplate kW
- Inverter PWM (pulse width modulation) frequency

*Can be configured by the user to provide alert indication at user-defined limit.
†Override protection: Causes compressor to first unload and then, if necessary, shut down.
**Will not require manual reset or cause an alarm if auto-restart after power failure is enabled.
††By display code only.

CONTROL PANEL DISPLAY (Front View)

ICVC ENGLISH DISPLAY IN ENGLISH UNITS

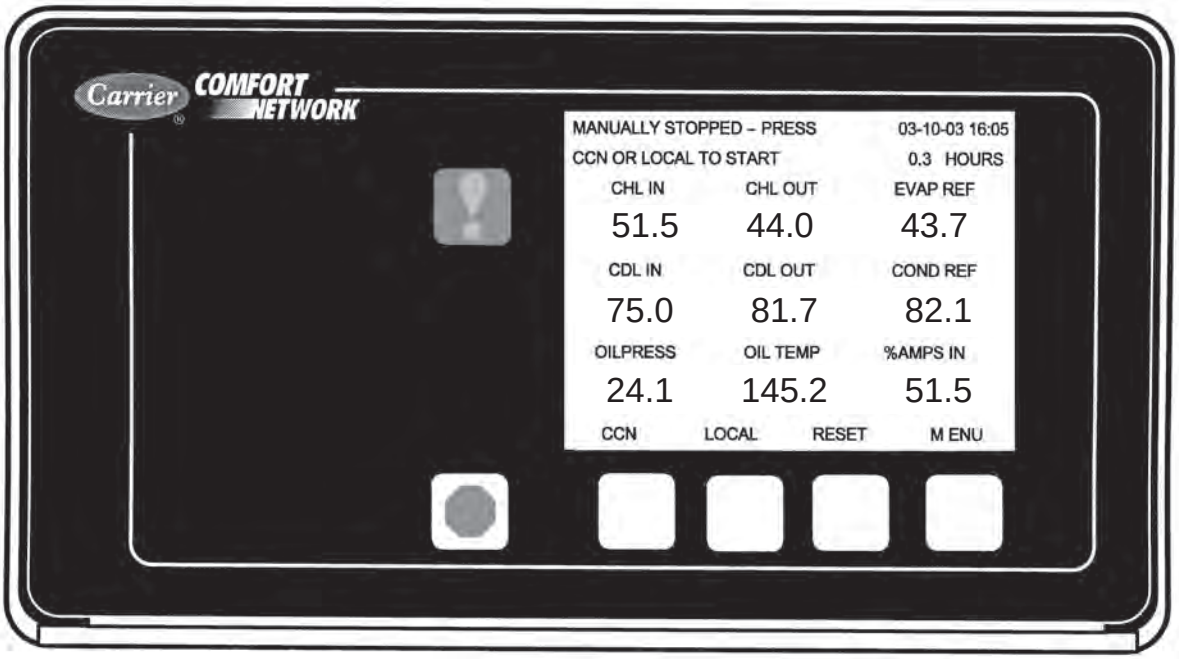

ICVC CHINESE DISPLAY IN METRIC UNITS

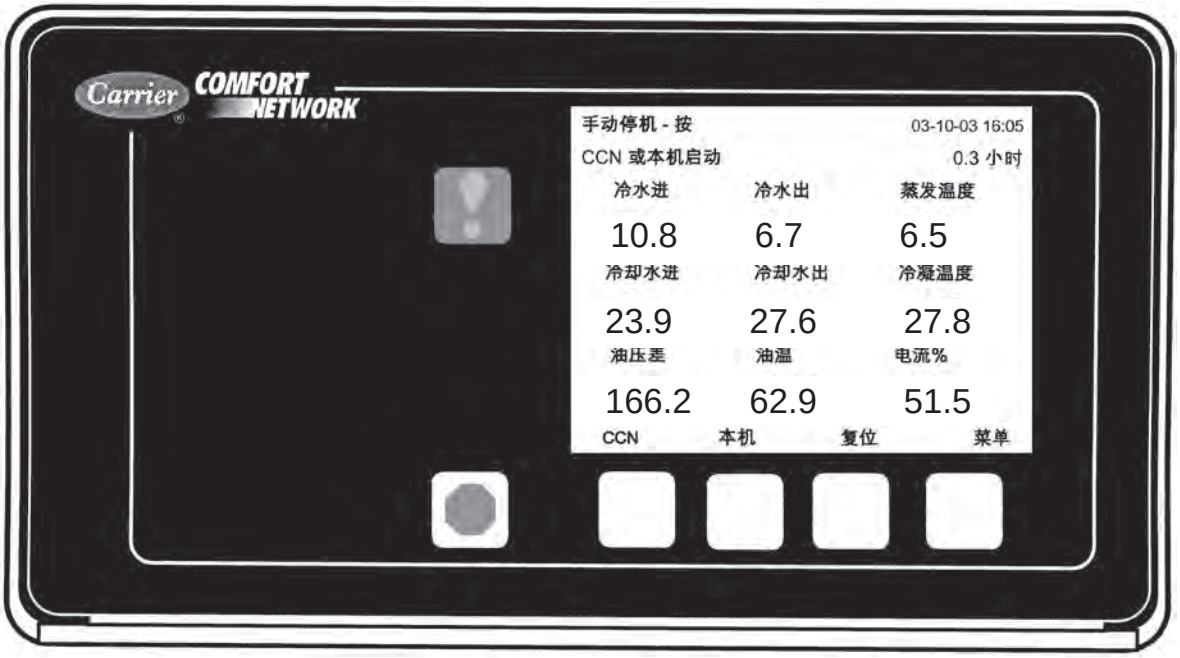

CCN COMMUNICATION WIRING FOR MULTIPLE CHILLERS (TYPICAL)

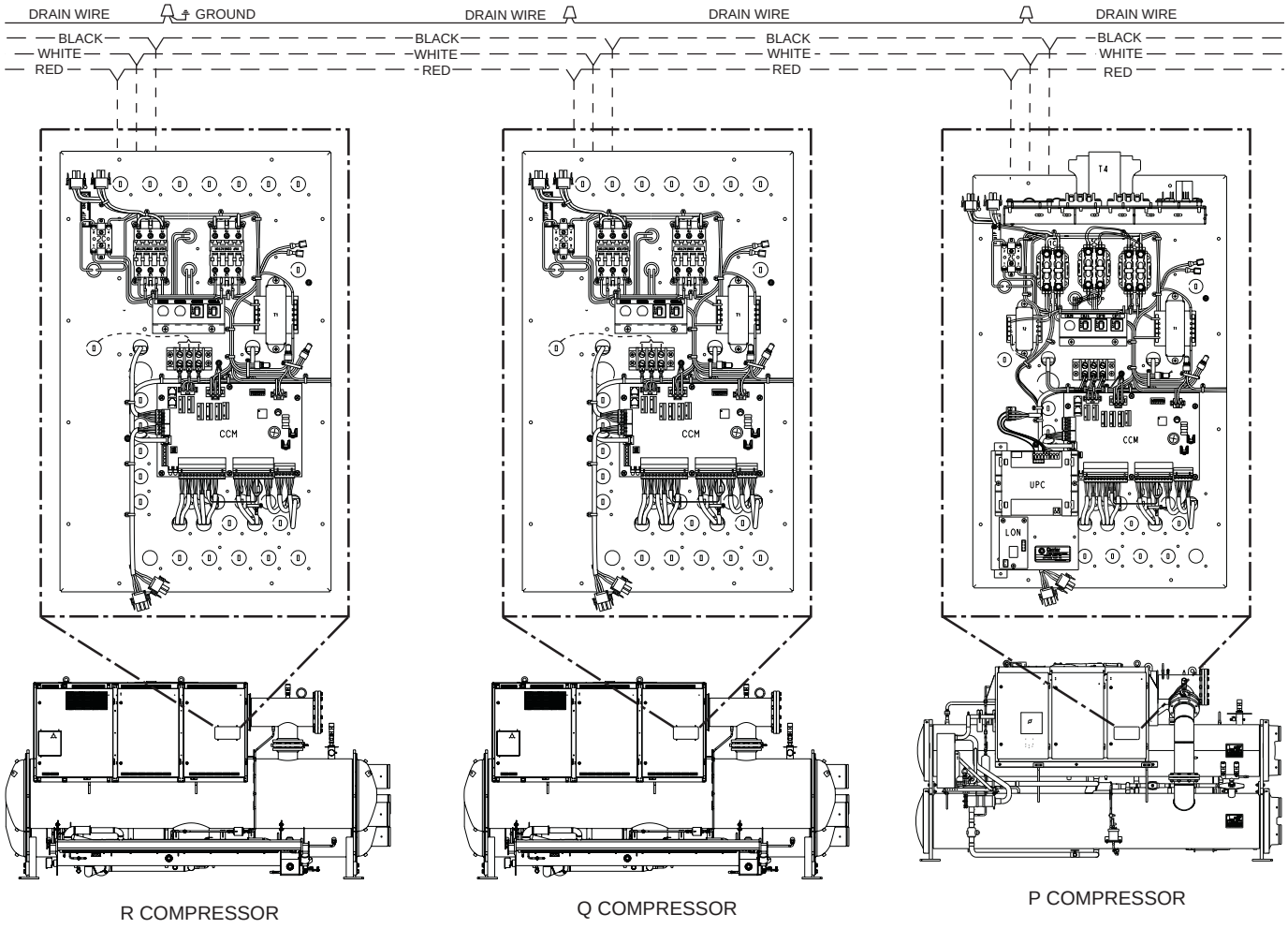

LEGEND

CCM — Chiller Control Module
——— Factory Wiring
- - - - Field Wiring

CONTROL SEQUENCE

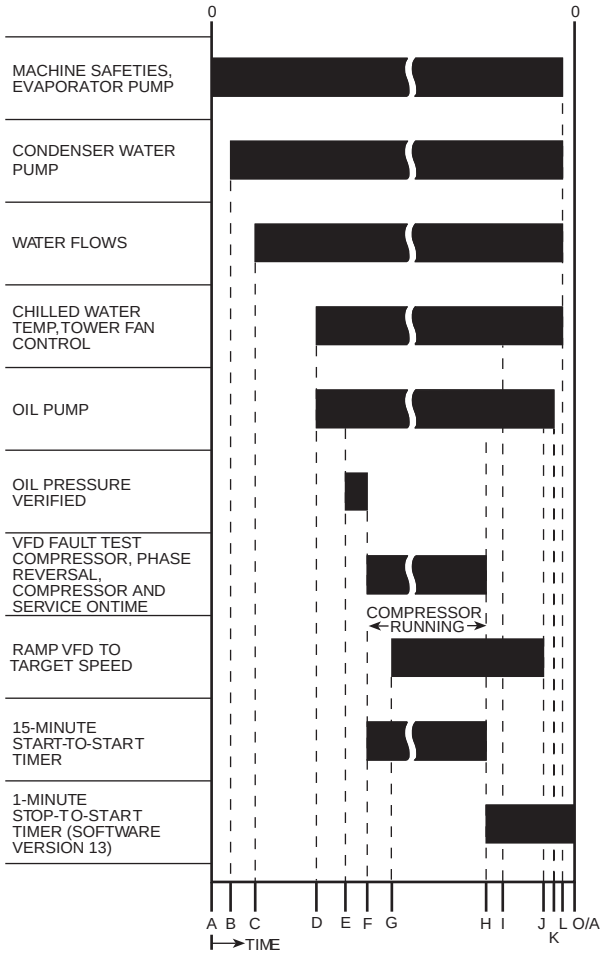

0 — Phase reversal monitored
A — START INITIATED: Pre-start checks are made; evaporator pump started
B — Condenser liquid pump started (5 seconds after A); tower fan control enabled
C — Liquid flows verified (30 sec to 5 minutes maximum after B)
D — Chilled liquid temperature checked against control point; oil pump on.
E — Oil pressure verified (oil pressure verified 45-300 sec after D).
F — VFD starts; phase reversal conditions monitored; compressor ontime and service ontime start; 15-minute inhibit timer starts (VFD fault tests for 15 sec after F)
G — Verify average current >5% within 15 sec after VFD start, ramp to VFD target speed.
H — Compressor reaches target speed, chiller set to running status
I — Shutdown initiated: Target VFD speed to 0% (or J occurs)
J — Ramp down until percent line current ≤ soft stop amps threshold (0-60 sec after I)
K — Oil pump relay off (1-20 sec after J)
L — Evaporator pump de-energized (60 sec after K); condenser pump and tower fan control may continue to operate if condenser pressure is high; evaporator pump may continue if in RECYCLE mode
O/A — Restart permitted (both inhibit timers expired) (minimum of 15 minutes after F; minimum of 3 minutes after L)

Control sequence

To start — Local start-up (manual start-up) is initiated by pressing the LOCAL or CCN menu softkey, which is indicated on the default international chiller visual control (ICVC) screen. Time schedule 01 or 03, respectively, must be in the Occupied mode and the internal 15-minute start-to-start and the 1-minute stop-to-start inhibit timers must have expired. All pre-start safeties are checked to verify that all prestart alerts and safeties are within limits (if one is not, an indication of the fault displays and the start will be delayed or is aborted). The signal is sent to start the cooler liquid pump. Five seconds later, the condenser liquid pump is energized. If satisfied, it checks the chilled liquid temperature against the control point. If the temperature is less than or equal to the chilled liquid control point, the condenser liquid pump is de-energized and the chiller goes into a recycle mode.

If the chilled liquid temperature is high enough, the start-up sequence continues. The oil pump is started and waits a minimum of 45 seconds to verify oil flow. Once oil flow is verified, the VFD is energized. The control will monitor for a phase reversal condition. At this time, the following occurs:

- The "start-to-stop" timer is activated.
- The "compressor on-time" and "service on-time" timers are activated.
- The "starts in 12-hour counter" advances by one.
- The "total compressor starts counter" advances by one.

Once started — If the VFD average current is >5% within 15 seconds after VFD start, the machine enters run mode and speed will be ramped up to meet VFD target speed. Once the target speed is met, the control enters the capacity control mode.

Shutdown sequence — The chiller shutdown is initiated if any of the following occur:

- The Stop button is pressed for at least one second (the alarm light blinks once to confirm the stop command).
- A recycle shutdown is initiated.
- The time schedule has gone into unoccupied mode.
- The chiller protective limit has been reached and the chiller is in alarm.
- The start/stop status is overridden to stop from the ICVC, CCN system, or building management system.

Once the controls shutdown sequence is initiated, the compressor is stopped and the VFD target speed is set to 0. If optional soft stop unloading is activated when the Stop button is pressed or the remote contacts open, motor speed decreases to a configured amperage level, and the compressor is stopped. The display indicates "Shutdown in Progress" while the motor speed decreases. Compressor ontime and service ontime timers stop once the current in all phases is <5%, indicating a VFD Stop Complete. The oil pump and cooler liquid pump are then deenergized. The condenser liquid pump shuts down when the refrigerant temperature or entering condenser liquid temperature is below pre-established limits. The 3-minute start-to-stop timer starts.

Restart — Restart is permitted after both inhibit timers have expired. If shutdown was due to a safety shutdown, the reset button must be depressed before restarting the chiller.

Typical piping and wiring

23XRV CHILLER
(UNIT WITH R COMPRESSOR SHOWN)

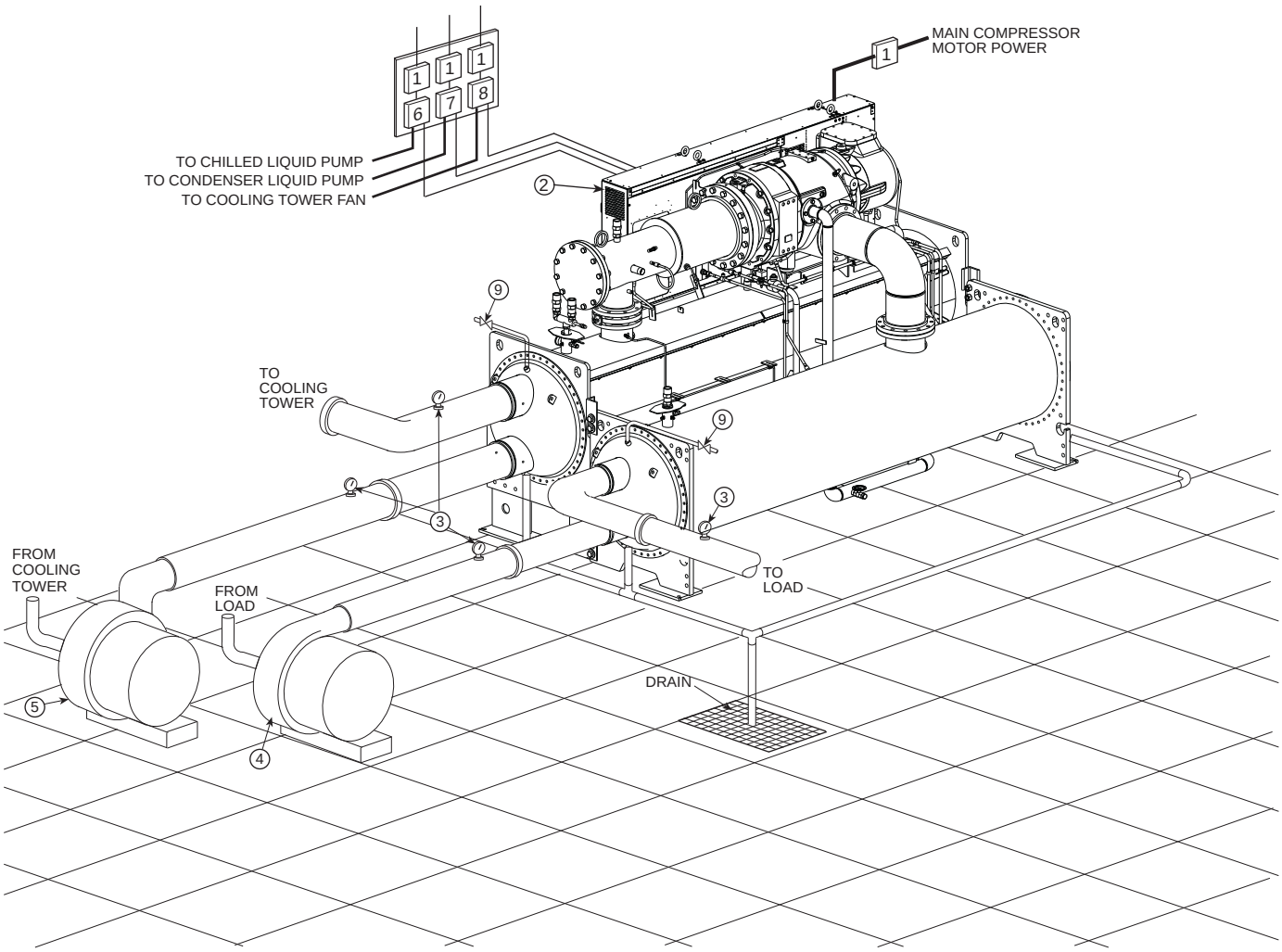

LEGEND

1 — Disconnect
2 — Unit-Mounted VFD/Control Center
3 — Pressure Gages
4 — Chilled Liquid Pump
5 — Condenser Liquid Pump
6 — Chilled Liquid Pump Starter
7 — Condenser Liquid Pump Starter
8 — Cooling Tower Fan Starter
9 — Vents
Piping
Control Wiring
Power Wiring

NOTES:

1. Operating Environment — Chiller should be installed in an indoor environment where the ambient temperature is between 40 to 104 F (4 to 40 C) with a relative humidity (non-condensing) of 95% or less. To ensure that electrical components operate properly, do not locate the chiller in an area exposed to dust, dirt, corrosive fumes, or excessive heat and humidity.
2. Wiring and piping (with flexible connections) shown are for general point-of-connection only and are not intended to show details for a specific installation. Certified field wiring and dimensional diagrams are available on request.
3. All wiring must comply with applicable codes.
4. Refer to Carrier System Design Manual for details regarding piping techniques.
5. Wiring not shown for optional devices such as:
   - remote start/stop
   - remote alarms
   - optional safety device
   - 4 to 20 mA resets
   - optional remote sensors
   - kW output
   - head pressure reference
6. Flow switches are NOT required.
7. Carrier suggests vibration spring isolation for chillers installed in upper floors. Carrier suggests that a structural engineer be consulted if the transmission of vibrations from mechanical equipment is of concern.

Control wiring schematic

23XRV COMPONENT ARRANGEMENT

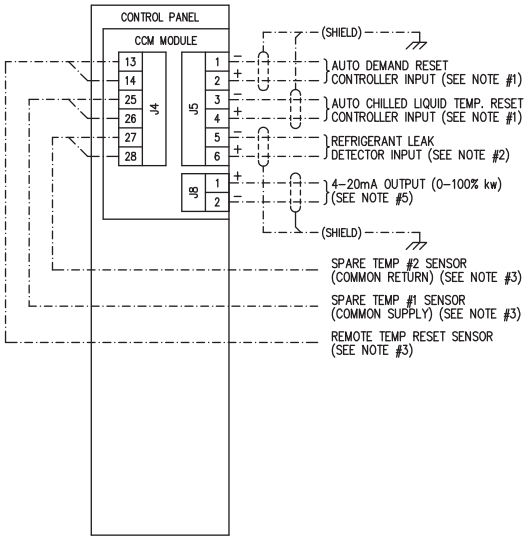

CONTROL PANEL OPTIONAL WIRING

NOTES:

1. THIS FEATURE IS STANDARD IN THE 23XR CONTROLS, BUT REQUIRES A CONTROLLER WITH A NON–GROUNDED 4–20mA OR 1–5Vdc OUTPUT SIGNAL, NOT BY CARRIER.
2. THIS FEATURE IS STANDARD IN THE 23XR CONTROLS, BUT REQUIRES AN EXTERNAL CONTROLLER WITH A NON–GROUNDED 4–20mA OUTPUT SIGNAL, NOT BY CARRIER.
3. THIS FEATURE IS STANDARD IN THE 23XR CONTROLS, BUT REQUIRES A SENSOR PACKAGE OPTION, BY CARRIER.
4. PINS SHOWN FOR REFERENCE ONLY. ACTUAL PIN LAYOUT NOT SHOWN.
5. THIS FEATURE IS STANDARD IN THE 23XR CONTROLS. CONTROLLERS MONITORING THIS SIGNAL MUST HAVE A NON–GROUNDED INPUT WITH A MAXIMUM IMPEDANCE OF 500 OHMS.

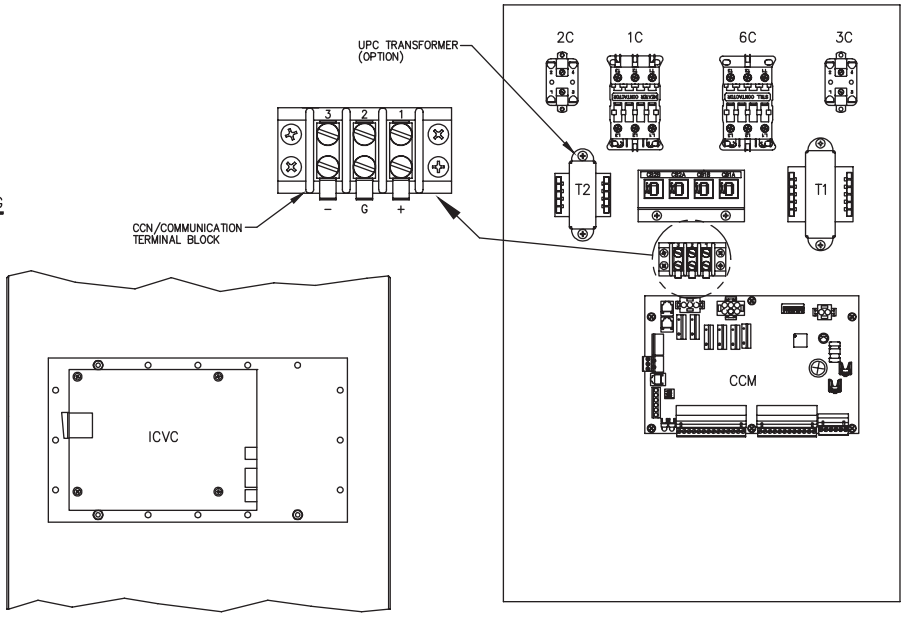

INSIDE PANEL DOOR

CONTROL PANEL COMPONENT LAYOUT

UNITS WITH Q,R COMPRESSORS

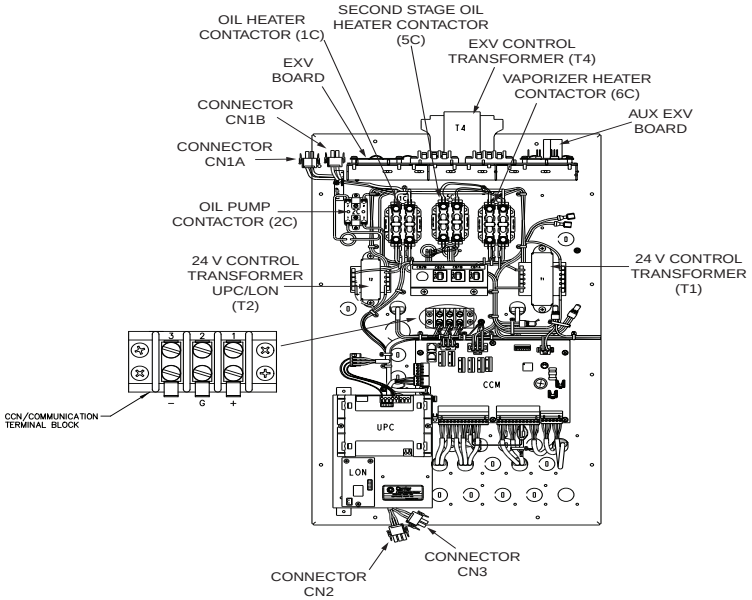

UNITS WITH P COMPRESSORS

LEGEND

CCM — Chiller Control Module
CCN — Carrier Comfort Network®
ICVC — International Chiller Visual Controller

23XRV FRAME SIZE 30-57 MACHINE FOOTPRINT

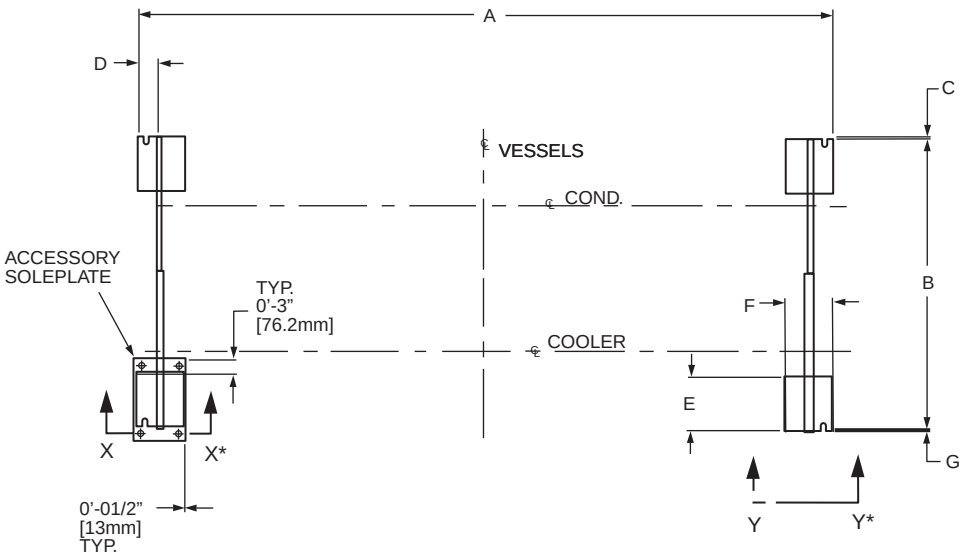

*See detail on page 25.

23XRV HEAT EXCHANGER SIZE 30-57	DIMENSIONS (ft-in.)							DIMENSIONS (mm)						
	A	B	C	D	E	F	G	A	B	C	D	E	F	G
30-32	12-10 3/4	5-4 1/4	0	0-3 5/8	1-1 3/4	0-9	0-1/2	3931	1632	0	92	349	229	13
35-37	14- 7 1/4	5-4 1/4	0	0-3 5/8	1-1 3/4	0-9	0-1/2	4451	1632	0	92	349	229	13
40-42	12-10 3/4	6-0	0-1 1/2	0-3 5/8	1-1 3/4	0-9	0-1/2	3931	1829	38	92	349	229	13
45-47	14- 7 1/4	6-0	0-1 1/2	0-3 5/8	1-1 3/4	0-9	0-1/2	4451	1829	38	92	349	229	13
50-52	12-10 3/4	6-5 1/2	0- 1/2	0-3 5/8	1-1 3/4	0-9	0-1/2	3931	1969	13	92	349	229	13
55-57	14- 7 1/4	6-5 1/2	0- 1/2	0-3 5/8	1-1 3/4	0-9	0-1/2	4451	1969	13	92	349	229	13

23XRV FRAME SIZE A MACHINE FOOTPRINT

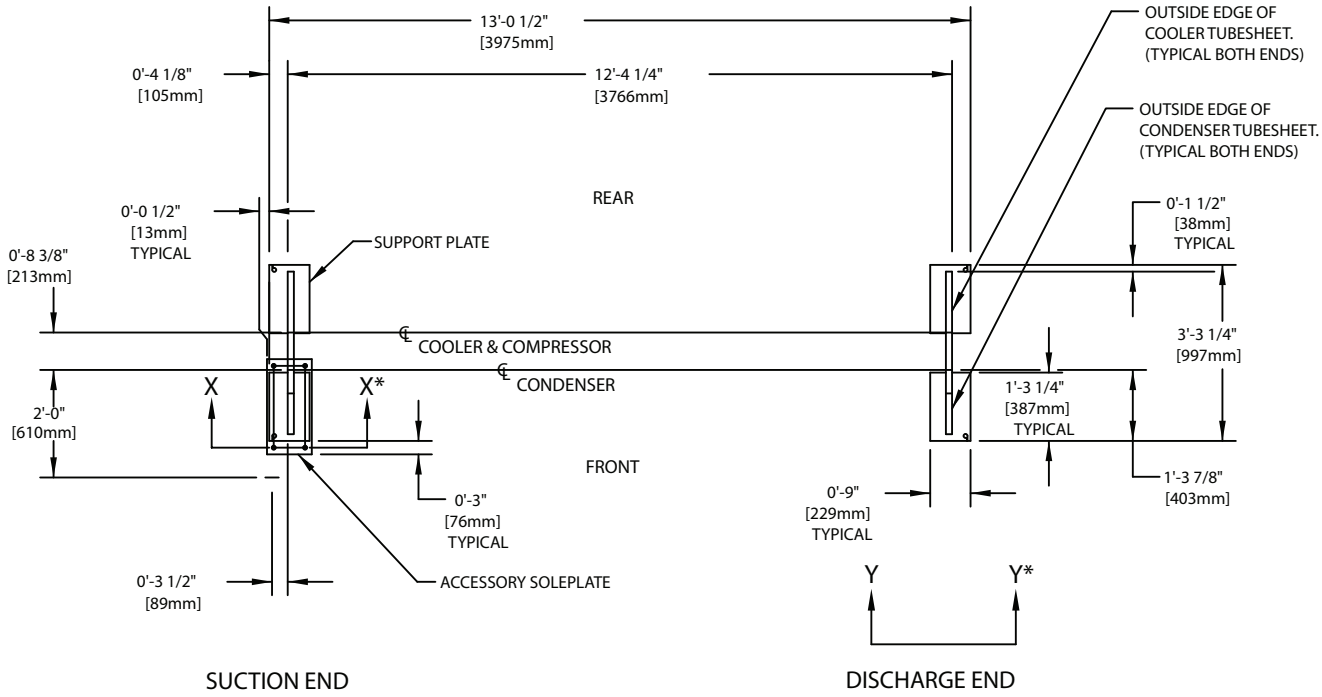

*See detail on page 25.

23XRV FRAME SIZE B MACHINE FOOTPRINT

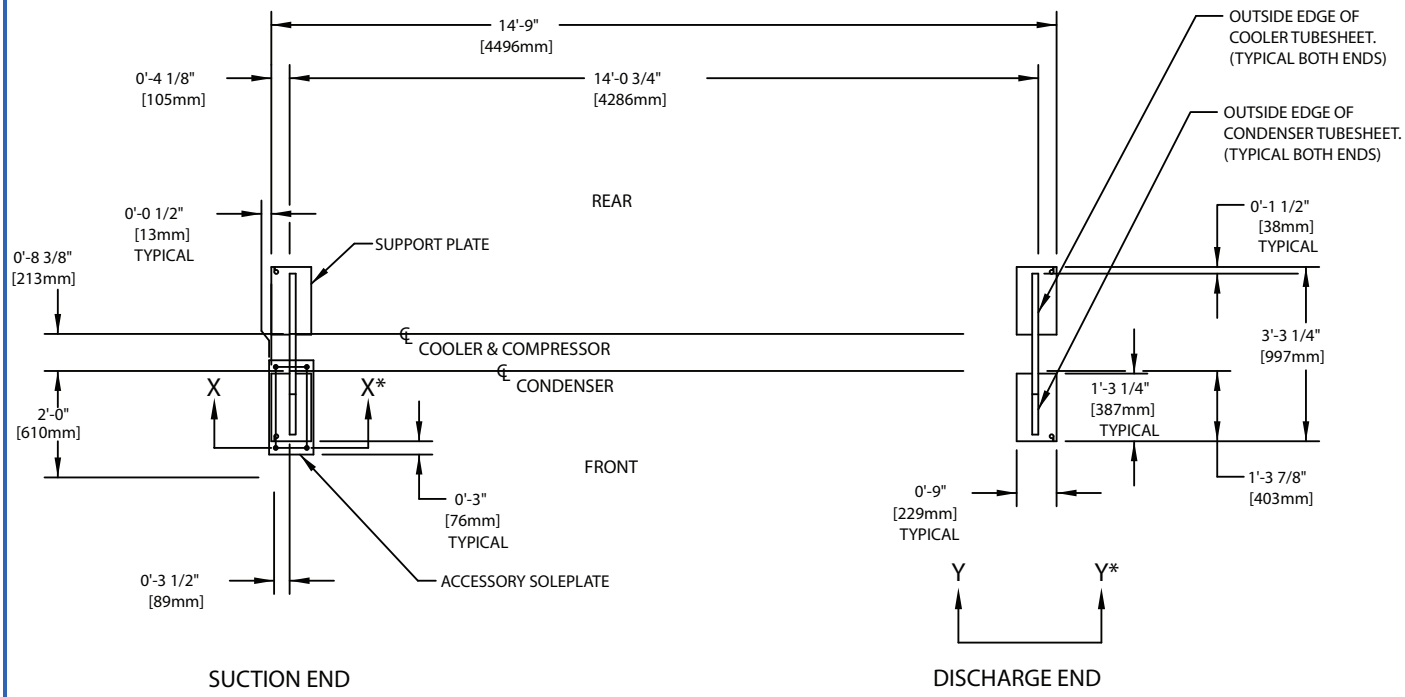

*See detail on page 25.

23XRV ISOLATION WITH ACCESSORY SOLEPLATE PACKAGE

TYPICAL ISOLATION

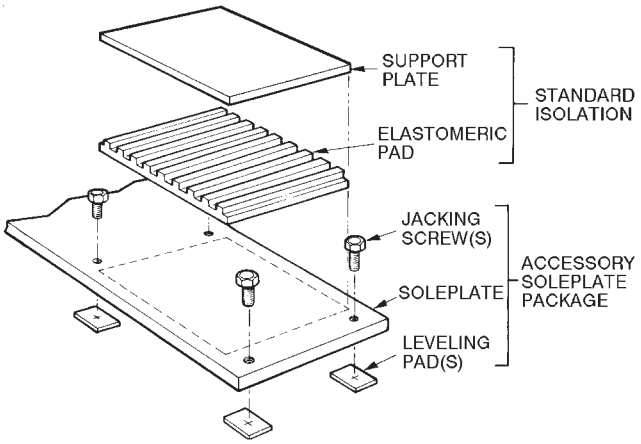

STANDARD ISOLATION

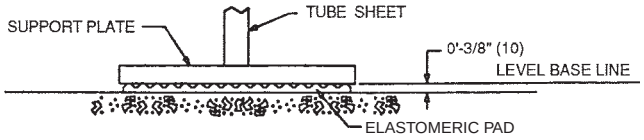

VIEW Y-Y

ISOLATION WITH ISOLATION PACKAGE ONLY (STANDARD)

NOTE: Isolation package includes 4 elastomeric pads.

ACCESSORY SOLEPLATE DETAIL

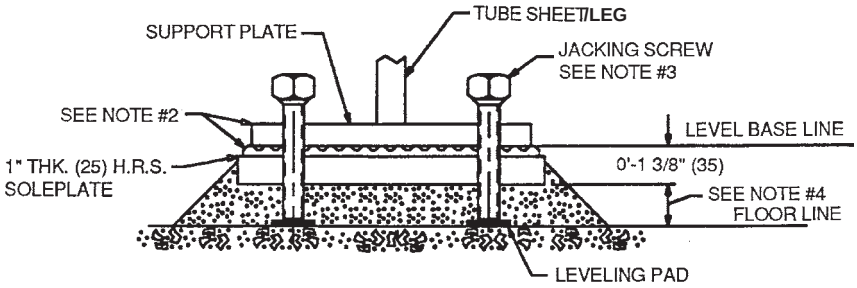

VIEW X-X

NOTES:

1. Dimensions in ( ) are in millimeters.
2. Accessory soleplate package includes 4 soleplates, 16 jacking screws and leveling pads. Requires isolation package.
3. Jacking screws to be removed after grout has set.
4. Thickness of grout will vary, depending on the amount necessary to level chiller. Use only pre-mixed non-shrinking grout, Ceilcote 748 or Chemrex Embeco 636 Plus Grout, 0′-1$^1/_2$″ (38.1) to 0′-2$^1/_4$″ (57) thick.
5. Service clearance under the chiller is enhanced if leveling pads are not extended along the entire length of the heat exchangers.

23XRV NOZZLE ARRANGEMENTS

NOZZLE-IN-HEAD WATERBOXES

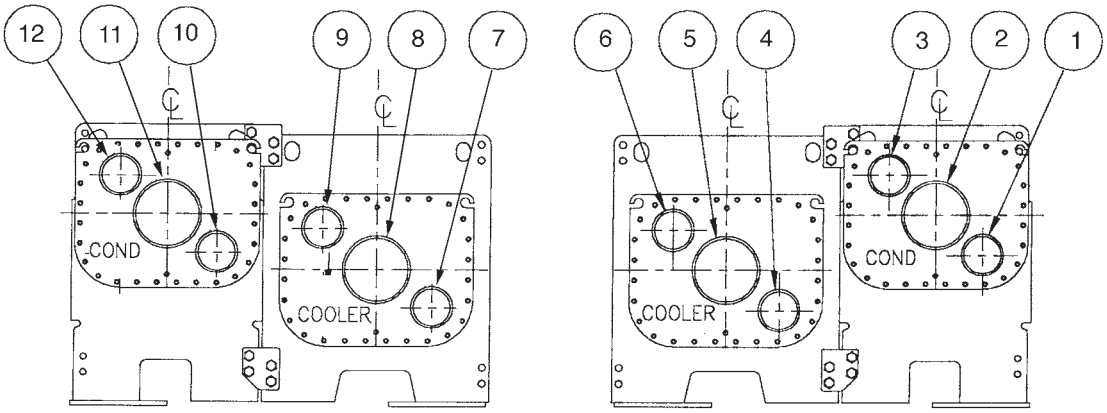

DISCHARGE END SUCTION END

FRAME 3

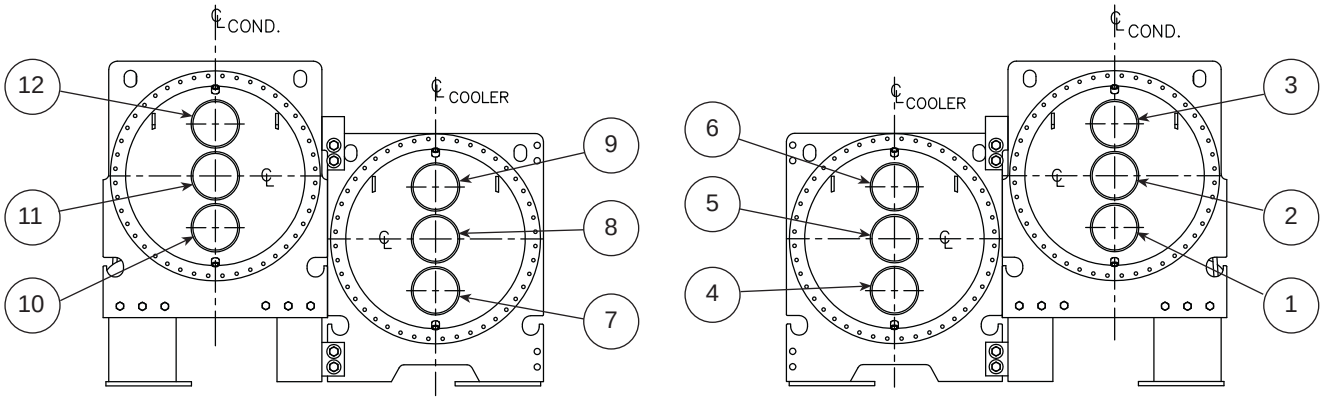

DISCHARGE END SUCTION END

FRAMES 4 AND 5

23XRV NOZZLE ARRANGEMENTS (cont)

NOZZLE-IN-HEAD WATERBOXES (cont)

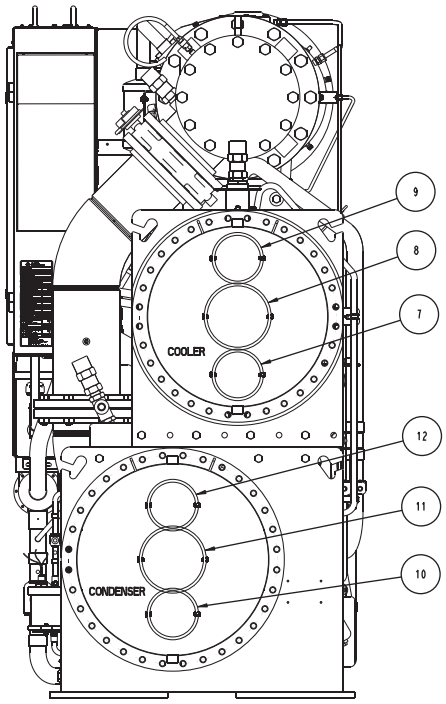

DISCHARGE END

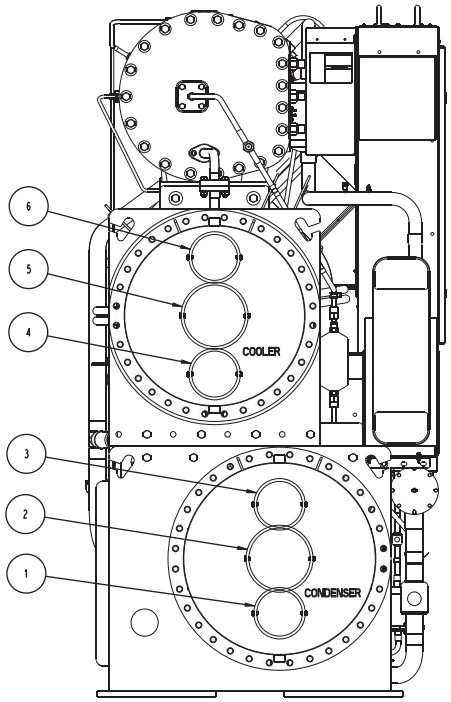

SUCTION END

FRAMES A,B

NOZZLE ARRANGEMENT CODES FOR ALL 23XRV NOZZLE-IN-HEAD WATERBOXES

PASS	COOLER WATERBOXES		
	In	Out	Arrangement Code*
1	8	5	A
	5	8	B
2	7	9	C
	4	6	D
3	7	6	E
	4	9	F

*Refer to certified drawings.

PASS	CONDENSER WATERBOXES		
	In	Out	Arrangement Code*
1	11	2	P
	2	11	Q
2	10	12	R
	1	3	S
3	10	3	T
	1	12	U

23XRV NOZZLE ARRANGEMENTS (cont)

MARINE WATERBOXES

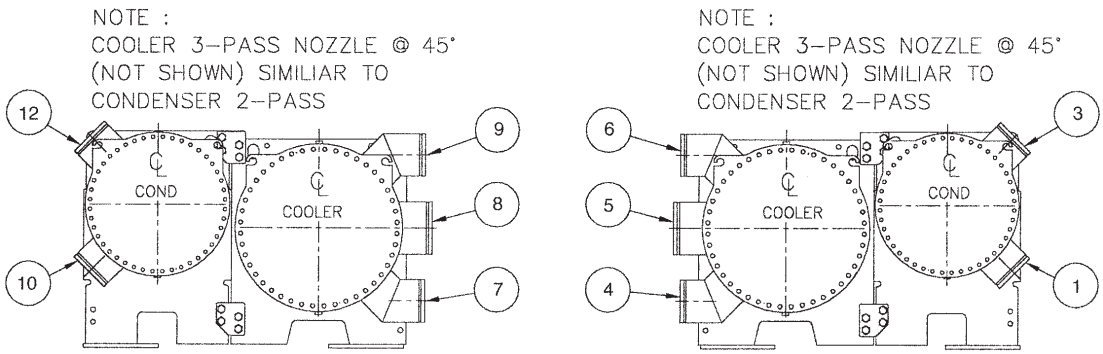

DISCHARGE END SUCTION END

FRAME 3

NOZZLE ARRANGEMENT CODES

PASS	COOLER WATERBOXES		
	In	Out	Arrangement Code
1	8	5	A
	5	8	B
2	7	9	C
	4	6	D
3	7	6	E
	4	9	F

PASS	CONDENSER WATERBOXES		
	In	Out	Arrangement Code
1	—	—	—
	—	—	—
2	10	12	R
	1	3	S
3	—	—	—
	—	—	—

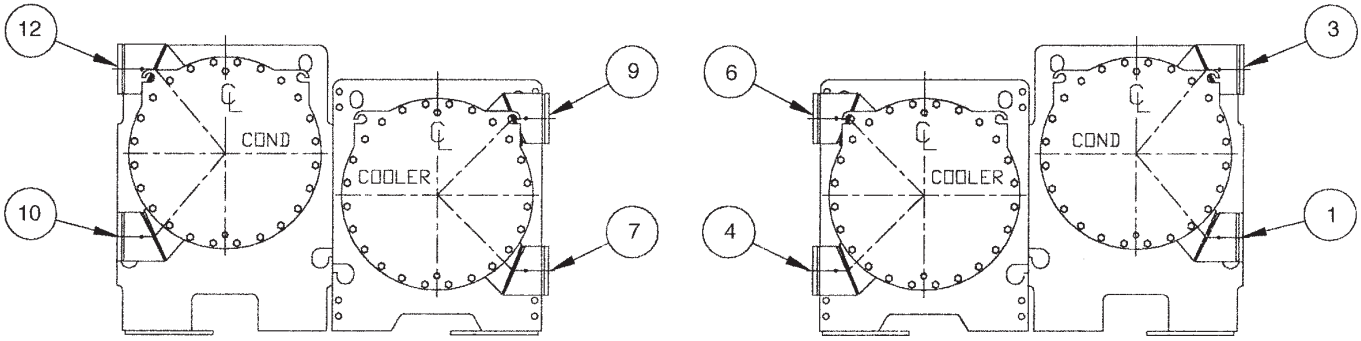

DISCHARGE END SUCTION END

FRAMES 4, AND 5

NOZZLE ARRANGEMENT CODES

PASS	COOLER WATERBOXES		
	In	Out	Arrangement Code
1	9	6	A
	6	9	B
2	7	9	C
	4	6	D
3	7	6	E
	4	9	F

PASS	CONDENSER WATERBOXES		
	In	Out	Arrangement Code
1	—	—	—
	—	—	—
2	10	12	R
	1	3	S
3	—	—	—
	—	—	—

23XRV NOZZLE ARRANGEMENTS (cont)

MARINE WATERBOXES (cont)

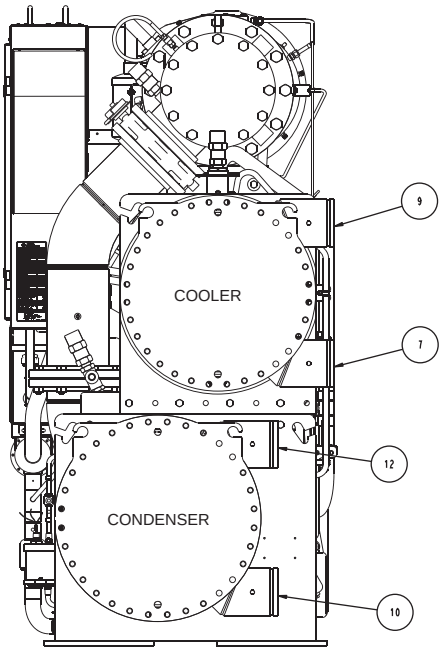

DISCHARGE END

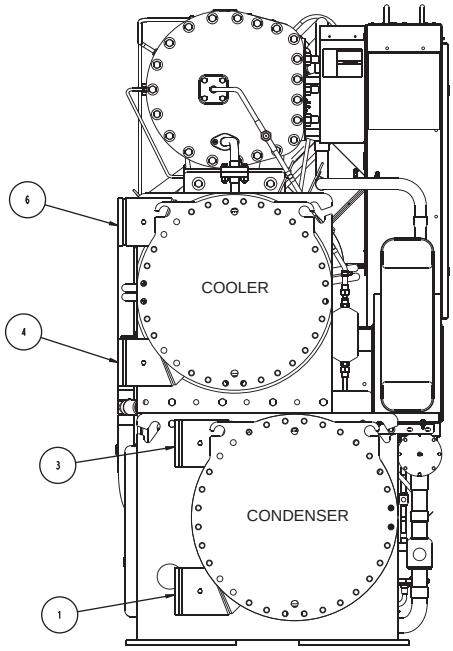

SUCTION END

FRAMES A,B

NOZZLE ARRANGEMENT CODES

PASS	COOLER WATERBOXES		
	In	Out	Arrangement Code
1	9	6	A
	6	9	B
2	7	9	C
	4	6	D
3	7	6	E
	4	9	F

PASS	CONDENSER WATERBOXES		
	In	Out	Arrangement Code
1	—	—	—
	—	—	—
2	10	12	R
	1	3	S
3	—	—	—
	—	—	—

RELIEF VALVE LOCATIONS

LOCATION	FRAME SIZE	RELIEF VALVE OUTLET SIZE	QUANTITY WITHOUT ISOLATION VALVES	QUANTITY WITH ISOLATION VALVES
Discharge Pipe Assembly	3-5	$1^1/_4$-in. NPT FEMALE CONNECTOR	1	1
	A,B	$1^1/_4$-in. NPT FEMALE CONNECTOR	N/A	1
Cooler	3-5, A,B	$1^1/_4$-in. NPT FEMALE CONNECTOR	2	1
Condenser	3-5, A,B	$1^1/_4$-in. NPT FEMALE CONNECTOR	2	2
Optional Storage Tank	N/A	1-in. NPT FEMALE CONNECTOR	2	2

NOTE: All valves relieve at 185 psig (1275 kPa).

RELIEF VALVE ARRANGEMENTS

WITH OPTIONAL ISOLATION OF DISCHARGE AND COOLER

UNITS WITH P COMPRESSOR

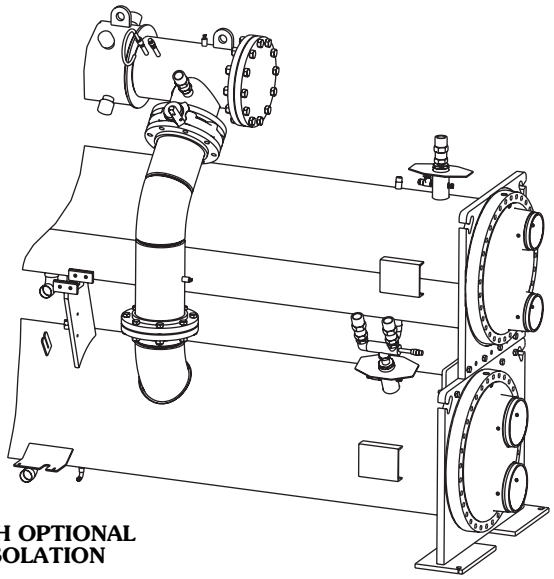

WITH OPTIONAL ISOLATION

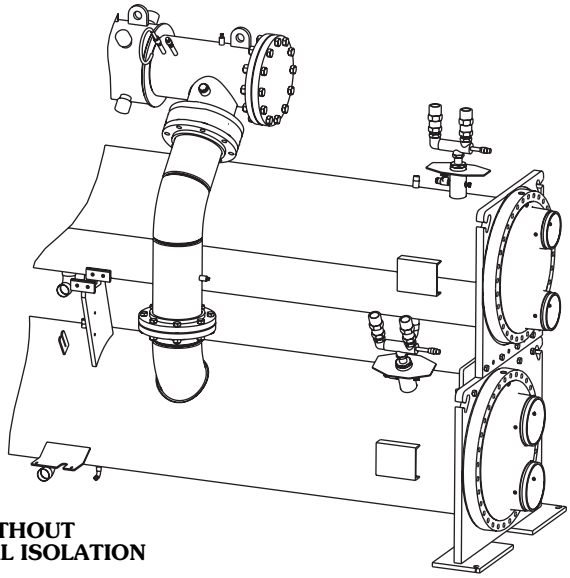

WITHOUT OPTIONAL ISOLATION

UNITS WITH Q COMPRESSOR

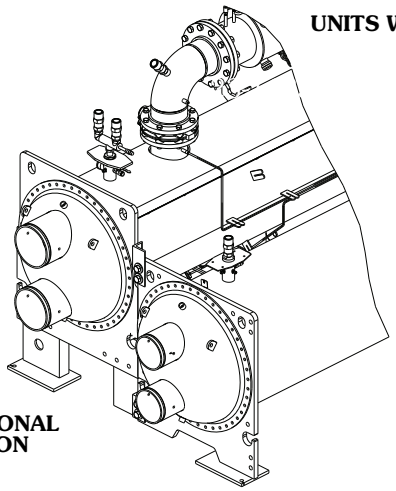

WITH OPTIONAL ISOLATION

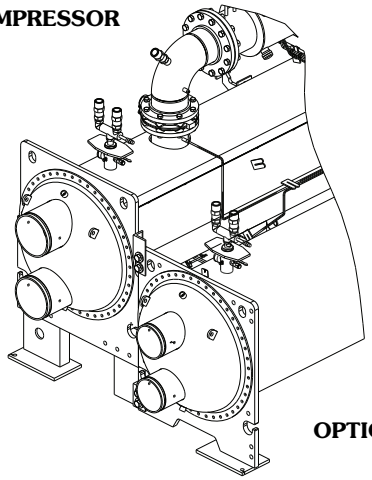

WITHOUT OPTIONAL ISOLATION

UNITS WITH R COMPRESSOR

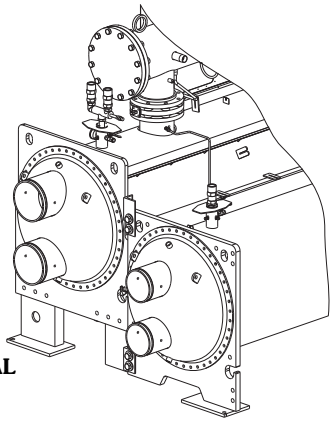

WITH OPTIONAL ISOLATION

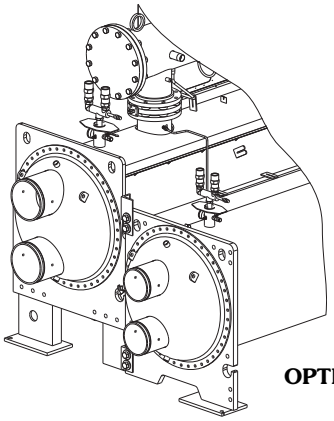

WITHOUT OPTIONAL ISOLATION

Vent and drain connections

Nozzle-in-head waterboxes have vent and drain connections on covers. Marine waterboxes have vent and drain connections on waterbox shells.

Provide high points of the chiller piping system with vents and the low points with drains. If shutoff valves are provided in the main liquid pipes near the unit, a minimal amount of system liquid is lost when the heat exchangers are drained. This reduces the time required for drainage and saves on the cost of re-treating the system liquid.

It is recommended that pressure gages be provided at points of entering and leaving liquid to measure pressure drop through the heat exchanger. Gages may be installed as shown in Pressure Gage Location table. Pressure gages installed at the vent and drain connections do not include nozzle pressure losses.

Use a reliable differential pressure gage to measure pressure differential when determining liquid flow. Regular gages of the required pressure range do not have the accuracy to provide accurate measurement of flow conditions.

PRESSURE GAGE LOCATION

NUMBER OF PASSES	GAGE LOCATION (Cooler or Condenser)
1 or 3	One gage in each waterbox
2	Two gages in waterbox with nozzles

ASME stamping

All 23XRV heat exchangers are constructed in accordance with ASHRAE (American Society of Heating, Refrigerating, and Air-Conditioning Engineers) 15 Safety Code for Mechanical Refrigeration (latest edition). This code, in turn, requires conformance with ASME (American Society of Mechanical Engineers) Code for Unfired Pressure Vessels wherever applicable.

Each heat exchanger and economizer (if equipped) is ASME 'U' stamped on the refrigerant side of each vessel.

Relief valve discharge pipe sizing

See page 29 for number of relief valves.

Relief valve discharge piping size should be calculated per the current version of the ASHRAE 15, latest edition, code using the tabulated C factors for each vessel shown in the table below.

23XRV RELIEF VALVE DISCHARGE PIPE SIZING

HEAT EXCHANGER	FRAME SIZE	VESSEL REQUIRED C FACTOR (lb air/Min)	RELIEF VALVE RATED C FACTOR (lb air/Min)	FIELD CONNECTION SIZE (FPT)
COOLER	A	36.8	72.1	1 1/4″
	B	42.0	72.1	1 1/4″
	30 to 32	43.4	72.1	1 1/4″
	35 to 37	49.5	72.1	1 1/4″
	40 to 42	50.4	72.1	1 1/4″
	45 to 47	57.4	72.1	1 1/4″
	50 to 52	53.7	72.1	1 1/4″
	55 to 57	61.1	72.1	1 1/4″
CONDENSER	A	39.2	72.1	1 1/4″
	B	44.8	72.1	1 1/4″
	30 to 32	41.4	72.1	1 1/4″
	35 to 37	47.1	72.1	1 1/4″
	40 to 42	47.1	72.1	1 1/4″
	45 to 47	53.7	72.1	1 1/4″
	50 to 52	51.2	72.1	1 1/4″
	55 to 57	58.3	72.1	1 1/4″

Carrier further recommends that an oxygen sensor be installed to protect personnel. Sensor should be able to sense the depletion or displacement of oxygen in the machine room below 19.5% volume oxygen per ASHRAE 15, latest edition.

DESIGN AND TEST PRESSURES (23XRV)

PRESSURES	SHELL SIDE (Refrigerant)		STANDARD TUBE SIDE (Liquid)		OPTIONAL TUBE SIDE (Liquid)	
	psig	kPa	psig	kPa	psig	kPa
Leak Test at Design Pressure*	185	1276	150	1034	300	2068
Hydrostatic	—	—	195	1344	390	2689
Proof Test*	204	1407	—	—	—	—

*Nitrogen/Helium.

HEAT EXCHANGER MATERIAL SPECIFICATIONS

ITEM	MATERIAL	SPECIFICATION
Shell	HR Steel	ASME SA516 GR .70
Tube Sheet	HR Steel	ASME SA516 GR .70
Condenser/Cooler Waterbox Cover		
Frames A & B 2-Pass Victaulic NIH	Cast Iron	ASTM A-536*
All Others	HR Steel	ASME SA516 GR .70, SA-36, SA-285 GRC, or Q345R
Condenser/Cooler Waterbox Shell	HR Steel	ASME SA675 GR .60, SA-516 GR .70 or SA-181 CL70, SA-36, SA-675 GR70, SAE AME 7496, or ASTM A139 GRB
Tubes	Finned Copper	ASME SB359 or C12200
Discharge/Suction		
Pipe	Steel	ASME SA106 GRB
Flanges	Steel	ASME SA105

*Cannot weld to A-536.

LEGEND

ASME — American Society of Mechanical Engineers
HR — Hot Rolled
NIH — Nozzle-in-Head

Insulation

23XRV MINIMUM FIELD-INSTALLED INSULATION REQUIREMENTS

COMPONENT	SIZE	INSULATION	
		ft²	m²
Cooler	A	83	7.7
	B	93	8.6
	30-32	96	8.9
	35-37	108	10.0
	40-42	109	10.1
	45-47	122	11.3
	50-52	115	10.7
	55-57	130	12.1
Misc. Liquid Lines	All Sizes	21	2.0
Economizer	All Sizes	20	1.9
Compressor Motor	All Sizes	17	1.6

Factory insulation — Thermal insulation is factory provided to the following areas:

- Cooler (not including waterbox)
- Condenser
- Suction line
- Compressor and motor
- Oil cooling line and oil return system line (oil and refrigerant lines at or near evaporator pressure are insulated)
- VFD cooling line (oil and refrigerant lines at or near evaporator pressure are insulated, Q and R compressor only)
- Motor cooling line
- Vaporizer
- Liquid line and discharge line
- Float chamber (Q and R compressor only)
- Optional economizer (including vent line and economizer muffler) for Q and R compressors; vent line and economizer muffler only for P compressors

Factory insulation is not available for the waterboxes.

Thermal insulation consists of 3 layers composed of $^1/_2$- in. (13 mm) closed cell, $^1/_2$-in. (13 mm) open cell, and $^3/_{16}$-in. (5 mm) vinyl for a total of 1 $^3/_{16}$-in. (31 mm) minimum. The $^1/_2$-in. (13 mm) closed cell foam has a thermal conductivity K value of 0.28 (BTU in.)/(hr sq ft °F) [0.0404 W/(m °C)] and conforms with Underwriters Laboratories (UL) Standard 94, Classification 94 HF-1. Both the $^1/_2$-in. (13 mm) foam and the $^3/_{16}$-in. (5 mm) vinyl layer will pass flammability test method MVSS 302.

Field insulation — The factory insulation provides excellent protection against condensation under most operating conditions. If temperatures in the equipment area exceed the maximum design conditions, extra insulation is recommended.

If the machine is to be field insulated, obtain the approximate areas from the 23XRV Minimum Field-Installed Insulation Requirements table.

Insulation of waterbox is made only in the field and this area is not included in 23XRV Minimum Field-Installed Insulation Requirements table. When insulating the covers, allow for service access and removal of covers. To estimate water-box cover areas, refer to certified drawings.

High humidity jobsite locations may require field-supplied and field-installed insulation on the float chamber, suction housing, and the lower half of the condenser.

Minimum fluid loop volume

For 23XRV units with Q or R compressors, minimum fluid volume must be in excess of 1.5 gal per ton (1.6 L per kW) for comfort cooling applications and apply 3 to 5 gal per ton (3.2 to 5.4 L per kW) fluid loop volume for process applications.

For 23XRV units with P compressors, minimum fluid volume must be in excess of 3.0 gal per ton (3.2 L per kW) for comfort cooling applications and apply 6 to 10 gal per ton (6.5 to 10.7 L per kW) fluid loop volume for process applications.

Guide specifications

Variable Speed Screw Chiller with Greenspeed® Intelligence

HVAC Guide Specifications

Size Range: **175 to 550 Tons (615 to 1934 kW) Nominal**

Carrier Model Number: **23XRV**

Part 1 — General

1.01 SYSTEM DESCRIPTION

A. Microprocessor-controlled liquid chiller shall use a semi-hermetic screw compressor using refrigerant HFC-134a only.

B. If a manufacturer proposes a liquid chiller using HCFC-123 refrigerant, which has a planned phase out date, then the manufacturer shall include in the chiller price:

1. A vapor activated alarm system consisting of all alarms, sensors, safeties, and ventilation equipment as required by ANSI/ASHRAE (American National Standards Institute/American Society of Heating, Refrigerating and Air-Conditioning Engineers) Standard 15 Safety Code for Mechanical Refrigeration (latest edition) with the quotation. System shall be capable of responding to HCFC-123 levels of 10 ppm Allowable Exposure Limit (AEL).
2. A free-standing refrigerant storage tank and pumpout unit shall be provided. The storage vessels shall be designed per ASME (American Society of Mechanical Engineers) Section VIII Division 1 code with 300 psig (2068 kPa) design pressure. Double relief valves per ANSI/ASHRAE 15, latest edition, shall be provided. The tank shall include a liquid level gage and pressure gage. The pumpout unit shall use a semi-hermetic reciprocating compressor with water-cooled condenser. Condenser water piping, 3-phase motor power, and 115-volt control power shall be installed at the jobsite by the installing contractor.
3. Zero emission purge unit capable of operating even when the chiller is not operating.
4. Back-up relief valve to rupture disk.
5. Factory-installed chiller pressurizing system to prevent leakage of noncondensables into the chiller during shutdown periods.
6. Plant room ventilation.
7. Removal and disposal of refrigerant at the end of the phase out period.
8. Chillers utilizing a purge unit shall include in the machine price the costs to perform the following regular maintenance procedures:
   a. Weekly: Check refrigerant charge.
   b. Quarterly: Charge purge unit dehydrator at least quarterly, more often if necessary. Clean foul gas strainer. Perform chemical analysis of oil.
   c. Annually: Clean and inspect all valves. Drain and flush purge shell. Clean orifices.

1.02 QUALITY ASSURANCE

A. Chiller performance shall be rated in accordance with AHRI (Air-Conditioning, Heating and Refrigeration Institute) Standard 550/590, latest edition.

B. Equipment and installation shall be in compliance with ANSI/ASHRAE 15 (latest edition).

C. Cooler and condenser refrigerant side shall include ASME 'U' stamp and nameplate certifying compliance with ASME Section VIII, Division 1 code for unfired pressure vessels.

D. A manufacturer's data report is required to verify pressure vessel construction adherence to ASME vessel construction requirements. Form U-1 as required per ASME code rules is to be furnished to the owner. The U-1 Form must be signed by a qualified inspector, holding a National Board Commission, certifying that construction conforms to the latest ASME Code Section VIII, Div. 1 for pressure vessels. The ASME symbol "U" must also be stamped on the heat exchanger. Vessels specifically exempted from the scope of the code must come with material, test, and construction methods certification and detailed documents similar to ASME U-1; further, these must be signed by an officer of the company.

E. Chiller shall be designed and constructed to meet UL and UL of Canada requirements and have labels appropriately affixed.

F. The management system governing the manufacture of this product is ISO (International Organization for Standardization) 9001:2008 certified.

G. Each compressor assembly shall undergo a mechanical run-in test to verify vibration levels, oil pressures, and temperatures are within acceptable limits. Each compressor assembly shall be proof tested at a minimum 204 psig (1407 kPa) and leak tested at 185 psig (1276 kPa) with a tracer gas mixture.

H. Entire chiller assembly shall be proof tested at 204 psig (1407 kPa) and leak tested at 185 psig (1276 kPa) with a tracer gas mixture on the refrigerant side. The leak test shall not allow any leaks greater than 0.5 oz (14.78 mL) per year of refrigerant. The water side of each heat exchanger shall be hydrostatically tested at 1.3 times rated working pressure.

I. Prior to shipment, the chiller automated controls test shall be executed to check for proper wiring and ensure correct controls operation.

J. Chillers shall have factory-mounted, factory-wired and factory-tested unit-mounted variable frequency drive (VFD). Proper VFD operation shall be confirmed prior to shipment.

1.03 DELIVERY, STORAGE AND HANDLING

A. Unit shall be stored and handled in accordance with manufacturer's instructions.

B. Unit shall be shipped with all refrigerant piping and control wiring factory installed.

C. Unit shall be shipped charged with oil and full charge of refrigerant HFC-134a or a nitrogen holding charge as specified on the equipment schedule.

D. Unit shall be shipped with firmly attached labels that indicate name of manufacturer, chiller model number, chiller serial number, and refrigerant used.

E. If the unit is to be exported, the manufacturer shall provide sufficient protection against sea water corrosion, making the unit suitable for shipment in a standard open top ocean shipping container.

F. Chiller and starter shall be stored indoors, protected from construction dirt and moisture. Chiller shall be inspected under shipping tarps, bags, or crates to be sure water has not collected during transit. Protective shipping covers shall be kept in place until machine is ready for installation. The inside of the protective cover shall meet the following criteria:

1. Temperature is between 40 F (4.4 C) and 120 F (48.9 C)
2. Relative humidity is between 10% and 80% non-condensing.

1.04 WARRANTY

Warranty shall include parts and labor for one year after start-up or 18 months from shipment, whichever occurs first. A refrigerant warranty shall be provided for a period of 5 years (North America only).

Part 2 — Products

2.01 EQUIPMENT

A. General:

Factory-assembled, single piece, liquid chiller shall consist of compressor, motor, VFD, lubrication system, cooler, condenser, initial oil and refrigerant operating charges, microprocessor control system, and documentation required prior to start-up.

B. Compressor:

1. One variable speed screw compressor of the high performance type.
2. Compressor and motor shall be hermetically sealed into a common assembly and arranged for easy field servicing.
3. The compressor motor shall be accessible for servicing without removing the compressor base from the chiller. Connections to the compressor casing shall use O-rings and gaskets to reduce the occurrence of refrigerant leakage. Connections to the compressor shall be flanged or bolted for easy disassembly.
4. Compressor bearings must have individual design life of 50 years or greater when operating at AHRI conditions.
5. Compressor shall provide capacity modulation from 100% to 15% capacity without the use of hot gas bypass or mechanical unloaders.
6. Compressor shall be provided with a factory installed positive pressure lubrication system to deliver oil under pressure to bearings and rotors at all operating conditions. Lubrication system shall include:
   a. Oil pump with factory-installed motor contactor with overload protection.
   b. Oil pressure sensor with differential readout at main control center.
   c. Oil pressure regulator.
   d. Oil filter with isolation valves to allow filter change without removal of refrigerant charge.
   e. Oil sump heater [115 v, 50 or 60 Hz] controlled from unit microprocessor.
   f. Oil reservoir temperature sensor with main control center digital readout.
   g. All wiring to oil pump, oil heater, and controls shall be pre-wired in the factory and power shall be applied to check proper operation prior to shipment.
7. Compressor shall be fully field serviceable. Compressors that must be removed and returned to the factory for service shall be unacceptable.
8. Acoustical attenuation shall be provided as required, to achieve a maximum (full load) sound level, measured per AHRI Standard 575 (latest edition).

C. Motor:

1. Compressor motor shall be of the semi-hermetic, liquid-refrigerant-cooled, squirrel-cage, induction-type suitable for voltage shown on the equipment schedule.
2. If an open (air-cooled) motor is provided, a compressor shaft seal leakage containment system shall be provided:
   a. An oil reservoir shall collect oil and refrigerant that leaks past the seal.
   b. A float device shall be provided to open when the reservoir is full, directing the refrigerant/oil mixture back into the compressor housing.
   c. A refrigerant sensor shall be located next to the open drive seal to detect leaks.
3. Motors shall be suitable for operation in a refrigerant atmosphere and shall be cooled by atomized refrigerant in contact with the motor windings.
4. Motor stator shall be arranged for service or removal with only minor compressor disassembly and without removing main refrigerant piping connections.
5. Full load operation of the motor shall not exceed nameplate rating.

6. One motor winding temperature sensor (and one spare) shall be provided.
7. Should mechanical contractor choose to provide a chiller with an air-cooled motor instead of the specified semi-hermetic motor, the contractor shall install additional cooling equipment to dissipate the motor heat.

   The following formula applies:

   Btuh = (FLkW motor) (0.05) (3413)

   Btuh = (FLkW motor) (171)

   CFM = Btuh/1.08 x 20 F (additional air flow)

   and, alternately

   Tons = Btuh/12,000

   The additional piping, valves, air-handling equipment, insulation, wiring, switchgear changes, ductwork, and coordination with other trades shall be the responsibility of the mechanical contractor. Shop drawings reflecting any changes to the design shall be included in the submittal and incorporated into the final as-built drawings for the project.
8. Also, if an open motor is provided, a mechanical room thermostat shall be provided and set at 104 F (40 C). If this temperature is exceeded, the chillers shall shut down and an alarm signal shall be generated to the central Energy Management System (EMS) display module, prompting the service personnel to diagnose and repair the cause of the overtemperature condition. The mechanical contractor shall be responsible for all changes to the design, including coordination with temperature control, electrical and other trades. In addition, the electrical power consumption of any auxiliary ventilation and/or mechanical cooling required to maintain the mechanical room conditions stated above shall be considered in the determination of conformance to the scheduled chiller energy efficiency requirement.

D. Evaporator and Condenser:
1. Evaporator and condenser shall be of shell and tube type construction, each in separate shells. Units shall be fabricated with high-performance tubing, steel shell and tube sheets with waterboxes. Waterboxes shall be nozzle-in-head type with stub out nozzles having Victaulic grooves to allow for use of Victaulic couplings.
2. Tubing shall be copper, high-efficiency type, with integral internal and external enhancement unless otherwise noted. Tubes shall be nominal $^3/_4$-in. OD with nominal wall thickness of 0.025 in. measured at the root of the fin unless otherwise noted. Tubes shall be rolled into tube sheets and shall be individually replaceable. Tube sheet holes shall be double grooved for joint structural integrity. Intermediate support sheet spacing shall not exceed 36 in. (914 mm).
3. Waterboxes and nozzle connections shall be designed for 150 psig (1034 kPa) minimum working pressure unless otherwise noted. Nozzles should have grooves to allow use of Victaulic couplings.
4. The tube sheets of the cooler and condenser shall be bolted together to allow for field disassembly and reassembly.
5. The vessel shall display an ASME nameplate that shows the pressure and temperature data and the 'U' stamp for ASME Section VIII, Division 1. A re-seating pressure relief valve(s) shall be installed on each heat exchanger. If a non-reseating type is used, a backup reseating type shall be installed in series.
6. Waterboxes shall have vents, drains, and covers to permit tube cleaning within the space shown on the drawings. A thermistor-type temperature sensor with quick connects shall be factory installed in each water nozzle.
7. Cooler shall be designed to prevent liquid refrigerant from entering the compressor. Devices that introduce pressure losses (such as mist eliminators) shall not be acceptable because they are subject to structural failures that can result in extensive compressor damage.
8. Tubes shall be individually replaceable from either end of the heat exchanger without affecting the strength and durability of the tube sheet and without causing leakage in adjacent tubes.
9. The subcooler, located in the bottom of the condenser, shall increase the refrigeration effect by cooling the condensed liquid refrigerant to a lower temperature, thereby reducing compressor power consumption.

E. Refrigerant Flow Control:

   The variable flow control system regulates refrigerant flow according to load conditions, providing a liquid seal at all operating conditions, eliminating unintentional hot gas bypass.

F. Controls, Safeties, and Diagnostics:
1. Controls:
   a. The chiller shall be provided with a factory-installed and factory-wired microprocessor control center. The control center shall include a 16-line by 40-character liquid crystal display, 4 function keys, stop button, and alarm light. Other languages are available using the international language translator software.
   b. All chiller and motor control monitoring shall be displayed at the chiller control panel.
   c. The controls shall make use of non-volatile memory.
   d. The chiller control system shall have the ability to interface and communicate directly to the building control system.

e. The default standard display screen shall simultaneously indicate the following minimum information:

1) Date and time of day
2) 24-character primary system status message
3) 24-character secondary status message
4) Chiller operating hours
5) Entering chilled water temperature
6) Leaving chilled water temperature
7) Evaporator refrigerant temperature
8) Entering condenser water temperature
9) Leaving condenser water temperature
10) Condenser refrigerant temperature
11) Oil supply pressure
12) Oil sump temperature
13) Percent motor rated load amps (RLA)

f. In addition to the default screen, status screens shall be accessible to view the status of every point monitored by the control center, including:

1) Evaporator pressure
2) Condenser pressure
3) Compressor speed
4) Bearing oil supply temperature
5) Compressor discharge temperature
6) Motor winding temperature
7) Number of compressor starts
8) Control point settings
9) Discrete output status of various devices
10) Variable frequency drive status
11) Optional spare input channels
12) Line current and voltage for each phase
13) Frequency, kW, kWhr, demand kW

g. Schedule Function:

The chiller controls shall be configurable for manual or automatic start-up and shutdown. In automatic operation mode, the controls shall be capable of automatically starting and stopping the chiller according to a stored user programmable occupancy schedule. The controls shall include built-in provisions for accepting:

1) A minimum of two 365-day occupancy schedules.
2) Minimum of 8 separate occupied/unoccupied periods per day
3) Daylight savings start/end
4) 18 user-defined holidays
5) Means of configuring an occupancy timed override
6) Chiller start-up and shutdown via remote contact closure

h. Service Function:

The controls shall provide a password-protected service function that allows authorized individuals to view an alarm history file, which shall contain the last 25 alarm/alert messages with time and date stamp. These messages shall be displayed in text form, not codes.

i. Network Window Function:

Each chiller control panel shall be capable of viewing multiple point values and statuses from other like controls connected on a common network, including controller maintenance data. The operator shall be able to alter the remote controller's set points or time schedule and to force point values or statuses for those points that are operator forcible. The control panel shall also have access to the alarm history file of all like controllers connected on the network.

j. Pump Control:

Upon request to start the compressor, the control system shall start the chilled and condenser water pumps and shall verify that flows have been established.

k. Ramp Loading:

A user-configurable ramp loading rate, effective during the chilled water temperature pulldown period, shall prevent a rapid increase in compressor power consumption. The controls shall allow configuration of the ramp loading rate in either degrees per minute of chilled water temperature pulldown or percent motor amps per minute. During the ramp loading period, a message shall be displayed informing the operator that the chiller is operating in ramp loading mode.

l. Chilled Water Reset:

The control center shall allow reset of the chilled water temperature set point based on any one of the following criteria:

1) Chilled water reset based on an external 4 to 20 mA signal.
2) Chilled water reset based on a remote temperature sensor (such as outdoor air).
3) Chilled water reset based on water temperature rise across the evaporator.

m. Demand Limit:

The control center shall limit amp draw of the compressor to the rated load amps or to a lower value based on one of the following criteria:

1) Demand limit based on a user input ranging from 40% to 100% of compressor rated load amps
2) Demand limit based on external 4 to 20 mA signal.

n. Controlled Compressor Shutdown:

The controls shall be capable of being configured to soft stop the compressor. The display shall indicate "shutdown in progress."

2. Safeties:
   a. Unit shall automatically shut down when any of the following conditions occur (each of these protective limits shall require manual reset and cause an alarm message to be displayed on the control panel screen, informing the operator of the shutdown cause):
      1) Motor overcurrent
      2) Over voltage*
      3) Under voltage*
      4) Single cycle dropout* (LF-2 VFDs only)
      5) Low oil sump temperature
      6) Low evaporator refrigerant temperature
      7) High condenser pressure
      8) High motor temperature
      9) High compressor discharge temperature
      10) Low oil pressure
      11) Prolonged stall
      12) Loss of cooler water flow
      13) Loss of condenser water flow
      14) Variable frequency drive fault
      15) High variable frequency drive temperature

      * Shall not require manual reset or cause an alarm if auto-restart after power failure is enabled.
   b. The control system shall detect conditions that approach protective limits and take self-corrective action prior to an alarm occurring. The system shall automatically reduce chiller capacity when any of the following parameters are outside their normal operating range:
      1) High condenser pressure
      2) High motor temperature
      3) Low evaporator refrigerant temperature
      4) High motor amps
      5) High VFD inverter temperature
   c. During the capacity override period, a pre-alarm (alert) message shall be displayed, informing the operator which condition is causing the capacity override. Once the condition is again within acceptable limits, the override condition shall be terminated and the chiller shall revert to normal chilled water control. If during either condition the protective limit is reached, the chiller shall shut down and a message shall be displayed informing the operator which condition caused the shutdown and alarm.
   d. Internal built-in safeties shall protect the chiller from loss of water flow. Differential pressure switches shall not be allowed to be the only form of freeze protection.
3. Diagnostics and Service:
   a. A self-diagnostic controls test shall be an integral part of the control system to allow quick identification of malfunctioning components.
   b. Once the controls test has been initiated, all pressure and temperature sensors shall be checked to ensure they are within normal operating range. A pump test shall automatically energize the chilled water pump, condenser water pump, and oil pump. The control system shall confirm that water flow and oil pressure have been established and require operator confirmation before proceeding to the next test.
   c. In addition to the automated controls test, the controls shall provide a manual test, which permits selection and testing of individual control components and inputs. A thermistor test and transducer test shall display on the ICVC screen the actual reading of each transducer and each thermistor installed on the chiller. All out-of-range sensors shall be identified. Pressure transducers shall be serviceable without the need for refrigerant charge removal or isolation.
4. Multiple Chiller Control:

   The chiller controls shall be supplied as standard with a 2-chiller lead/lag and a third chiller standby system. The control system shall automatically start and stop a lag or second chiller on a 2-chiller system. If one of the 2 chillers on line goes into a fault mode, the third standby chiller shall be automatically started. The 2-chiller lead/lag system shall allow manual rotation of the lead chiller and a staggered restart of the chillers after a power failure. The lead/lag system shall include load balancing if configured to do so.

G. Electrical Requirements:
   1. Electrical contractor shall supply and install main electrical power line, disconnect switches, circuit breakers, and electrical protection devices per local code requirements and as indicated necessary by the chiller manufacturer.
   2. Electrical contractor shall wire the chilled water pump and flow, condenser water pump and flow, and tower fan control circuit to the chiller control circuit.
   3. Electrical contractor shall supply and install electrical wiring and devices required to interface the chiller controls with the building control system if applicable.
   4. Electrical power shall be supplied to the unit at the voltage, phase, and frequency listed in the equipment schedule.

H. Piping Requirements — Instrumentation and Safeties:
   1. Mechanical contractor shall supply and install pressure gages in readily accessible locations in piping adjacent to the chiller such that they can be easily read from a standing position on the floor. Scale range shall be such that design values shall be indicated at approximately mid-scale.

2. Gages shall be installed in the entering and leaving water lines of the cooler and condenser.

I. Vibration Isolation:

Chiller manufacturer shall furnish neoprene isolator pads for mounting equipment on a level concrete surface.

J. Start-Up:

1. The chiller manufacturer shall provide a factory-trained representative, employed by the chiller manufacturer, to perform the start-up procedures as outlined in the Start-Up, Operation and Maintenance manual provided by the chiller manufacturer.
2. Manufacturer shall supply the following literature:
   a. Start-up, operation and maintenance instructions.
   b. Installation instructions.
   c. Field wiring diagrams.
   d. One complete set of certified drawings.

K. Special Features:

1. Soleplate Package:

   Unit manufacturer shall furnish a soleplate package consisting of soleplates, jacking screws, leveling pads, and neoprene pads.
2. Spring Isolators:

   Spring isolators shall be field furnished and selected for the desired degree of isolation.
3. Spare Sensors with Leads:

   Unit manufacturer shall furnish additional temperature sensors and leads.
4. Stand-Alone Pumpout Unit:

   A free-standing pumpout unit shall be provided. The pumpout unit shall use a semi-hermetic reciprocating compressor with liquid-cooled condenser. Condenser liquid piping and 3-phase motor power shall be installed at the jobsite by the installing contractor.
5. Separate Storage Tank and Pumpout Unit:

   A free-standing refrigerant storage tank and pumpout unit shall be provided. The storage vessels shall be designed per ASME Section VIII Division 1 code with 150 psig (1034 kPa) design pressure. Double relief valves per ANSI/ASHRAE 15, latest edition, shall be provided. The tank shall include a liquid level gage and pressure gage. The pumpout shall use a hermetic reciprocating compressor with water-cooled condenser. Condenser water piping and 3-phase motor power shall be installed at the jobsite by the installing contractor.
6. BACnet* Communication Option:

   Shall provide factory-installed communication capability with a BACnet MS/TP network. Allows integration with i-Vu® Open control system or a BACnet building automation system.
7. Building Control System Interface (LON):

   The chiller control system shall have the ability to interface and communicate directly to the building control using a LON-based system. The LonWorks† Carrier Translator shall output data in standard LON profiles.
8. Refrigerant Charge:

   The chiller shall ship from the factory fully charged with R-134a refrigerant and oil.
9. Thermal Insulation:

   Unit manufacturer shall insulate the cooler shell, economizer, suction elbow, motor shell, and motor cooling lines. Insulation shall be 1 in. (25.4 mm) thick with a thermal conductivity not exceeding

   $$0.28 \frac{(\text{Btu} \cdot \text{in.})}{\text{hr. Ft}^2\ \text{F}} \left(0.0404 \frac{\text{W}}{\text{m C}} \right)$$

   and shall conform to UL standard 94, classification 94 HF-1.
10. Automatic Hot Gas Bypass:

    Hot gas bypass valve and piping shall be factory-furnished to permit chiller operation for extended periods of time.
11. Cooler and Condenser Tubes:

    Contact your local Carrier Representative for other tube offerings.
12. Cooler and Condenser Passes:

    Unit manufacturer shall provide the cooler and/or condenser with 1, 2 or 3-pass configuration on the water side.
13. Nozzle-In-Head, 300 psig (2068 kPa):

    Unit manufacturer shall furnish nozzle-in-head style waterboxes on the cooler and/or condenser rated at 300 psig (2068 kPa).
14. Marine Waterboxes, 150 psig (1034 kPa):

    Unit manufacturer shall furnish marine style waterboxes on cooler and/or condenser rated at 150 psig (1034 kPa).
15. Marine Waterboxes, 300 psig (2068 kPa):

    Unit manufacturer shall furnish marine style waterboxes on cooler and/or condenser rated at 300 psig (2068 kPa).
16. Flanged Water Nozzles:

    Unit manufacturer shall furnish standard flanged piping connections on the cooler and/or condenser.
17. Hinges:

    Unit manufacturer shall furnish hinges on waterboxes to facilitate tube cleaning.

*BACnet is a registered trademark of ASHRAE (American Society of Heating, Refrigerating, and Air-Conditioning Engineers).
†LonWorks is a registered trademark of Echelon Corporation.

18. Optional Compressor Discharge Isolation Valve and Liquid Line Ball Valve:

    These items shall be factory installed to allow isolation of the refrigerant charge in the condenser for servicing the compressor.

19. Pumpout Unit:

    A refrigerant pumpout system shall be installed on the chiller. Pumpout system shall include a hermetic compressor and drive, internal piping, internal wiring, and motor. Field-supplied main power wiring and water piping shall be required. (Q and R compressor only)

20. Optional Seismic Isolation Package:

    Package shall meet International Building Code and ASCE 7 seismic qualification requirements in concurrence with ICC ES AC156 Acceptance Criteria for Seismic Qualification by Shake-Table Testing of Nonstructural Components and Systems. Manufacturer shall provide seismic certificate from OSHPD (California only).

21. Unit-Mounted Variable Frequency Drive (VFD) with Built-In Harmonic LiquiFlo™ II Filter (Q and R compressor only):

    a. Design:
        1) The VFD shall be refrigerant cooled, microprocessor-based, pulse width modulated design. Water-cooled designs are not acceptable.
        2) Input and output power devices shall be Insulated Gate Bipolar Transistors (IGBTs).
        3) Rectifier shall convert incoming fixed voltage/frequency to fixed DC voltage.
        4) Transistorized inverter and control regulator shall convert fixed DC voltage to a sinusoidal PWM waveform.
        5) Low voltage control sections and main power sections shall be physically isolated.
        6) Integrated controls shall coordinate motor speed to optimize chiller performance over a wide variety of operating conditions.

    b. Enclosure:
        1) Pre-painted, unit-mounted NEMA (National Electrical Manufacturers Association) 1 cabinet shall include hinged, lockable doors and removable lifting lugs.
        2) The VFD shall have a short circuit current rating of at least 65,000 amps.
        3) Provisions to padlock main disconnect handle in "Off" positions shall be provided. Mechanical interlock to prevent opening cabinet door with disconnect in the "On" position or moving disconnect to the "On" position while the door is open shall be provided.
        4) Provisions shall be made for top entry of incoming line power cables.

    c. Heat Sink:
        1) The heat sink (frame sizes 3, 4, 5 heat exchangers only) shall be refrigerant cooled. Heat sink and mating flanges shall be suitable for ASME design working pressure of 185 psig (1276 kPa).
        2) Refrigerant cooling shall be metered to maintain heat sink temperature within acceptable limits for ambient temperature.

    d. VFD Rating:
        1) Drive shall be suitable for operation at nameplate voltage ±10%.
        2) Drive shall be suitable for continuous operation at 100% of nameplate amps and 150% of nameplate amps for 5 seconds.
        3) Drive shall comply with applicable ANSI, NEMA, UL (Underwriters Laboratories) and NEC (National Electrical Code) standards.
        4) Drive shall be suitable for operation in ambient temperatures between 40 and 122 F (4 and 50 C), 95% humidity (non-condensing) for altitudes up to 6000 ft (1829 m) above sea level. Specific drive performance at jobsite ambient temperature and elevation shall be provided by the manufacturer in the bid.

    e. User Interface:

    A single display shall provide interface for programming and display of VFD and chiller parameters. Viewable parameters include:
        1) Operating, configuration, and fault messages
        2) Frequency in Hz
        3) Load and line side voltage and current (at the VFD)
        4) kW
        5) IGBT temperature

    f. VFD Performance:
        1) The VFD Voltage Total Harmonic Distortion (THD) and Harmonic Current Total Demand Distortion (TDD) shall not exceed IEEE-519 requirements using the VFD circuit breaker input terminals as the point of common coupling (PCC).
        2) The VFD full load efficiency shall meet or exceed 97% at 100% VFD rated ampacity.
        3) Active rectifier shall regulate unity displacement power factor to 0.99 or higher.
        4) Voltage boost capability to provide full motor voltage at reduced line voltage conditions.

5) The VFD shall feature soft start, linear acceleration, and coast to stop capabilities.
6) Base motor frequency shall permit motor to be utilized at nameplate voltage. Adjustable frequency range shall permit capacity control down to 15%.
7) The VFD shall have 150% instantaneous torque generation.

g. VFD Electrical Service (single point power):
1) The VFD shall have input circuit breaker with minimum 65,000 amp interrupt capacity.
2) The VFD shall have standard branch oil pump circuit breaker to provide power for chiller oil pump.
3) The VFD shall have standard 3 KVA control power transformer with circuit breaker to provide power for oil heater, VFD controls, and chiller controls.
4) The branch oil pump circuit breaker and control power transformer shall be factory wired.
5) Input power shall be 380/460 vac, ±10%, 3 Phase, 50/60 Hz, ±2% Hz.

h. Discrete Outputs:

115-v discrete contact outputs shall be provided for:
1) Circuit breaker shunt trip
2) Chilled water pump
3) Condenser water pump
4) Alarm status

i. Analog Output:

An analog (4 to 20 mA) output for head pressure reference shall be provided. This signal shall be suitable to control a 2-way or 3-way water regulating valve in the condenser piping.

j. Protection (the following shall be supplied):
1) Under-voltage
2) Over voltage
3) Phase loss
4) Phase reversal
5) Ground fault
6) Phase unbalance protection
7) Single cycle voltage loss protection (LF-2 VFD only)
8) Programmable auto re-start after loss of power
9) Motor overload protection (NEMA Class 10)
10) Motor over temperature protection

k. VFD Testing:

The VFD shall be factory mounted, factor wired and factory tested on the chiller prior to shipment.

22. Unit-Mounted Variable Frequency Drive (VFD) without Built-In Harmonic Filter:

a. Design:
1) VFD shall be air or refrigerant cooled, microprocessor-based, pulse width modulated design. Water-cooled designs are not acceptable.
2) Output power devices shall be insulated gate bipolar transistors (IGBTs).
3) Converter section with full-wave fixed diode bridge rectifier shall convert incoming fixed voltage/frequency to fixed DC voltage.
4) DC link shall filter and smooth the converted DC voltage.
5) Transistorized inverter and control regulator shall convert fixed DC voltage to a sinusoidal PWM waveform.
6) Integrated controls shall coordinate the motor speed to optimize chiller performance over a wide variety of operating conditions.

b. Enclosure:
1) Pre-painted, unit-mounted NEMA 1 cabinet shall include hinged, lockable doors and removable lifting lugs.
2) VFD shall have a short circuit current rating of at least 65,000 amps (100,000 amps is optional).
3) Provisions to padlock main disconnect handle in the "Off" positions shall be provided. Mechanical interlock to prevent opening cabinet door with disconnect in the "On" position or moving disconnect to the "ON" position while the door is open shall be provided.
4) Provisions shall be made for top entry of incoming line power cables.

c. Heat Sink:
1) The heat sink (frame sizes 3, 4, 5 heat exchangers only) shall be refrigerant cooled. Heat sink and mating flanges shall be suitable for ASME design working pressure of 185 psig (1276 kPa).
2) Refrigerant cooling shall be metered by integrated standard controls to maintain heat sink temperature within acceptable limits for ambient temperature.

d. VFD Rating:
1) Drive shall be suitable for nameplate voltage ±10%.
2) Drive shall be suitable for continuous operation at 100% of nameplate amps and 150% of nameplate amps for 3 seconds.
3) Drive shall comply with applicable UL, CE, and NEMA standards.
4) Drive shall be suitable for operation in ambient temperatures between 40 and

104 F (4.4 and 40 C), 95% humidity (non-condensing) for altitudes up to 3300 ft (1006 m) above sea level. Specific drive performance at jobsite ambient temperature and elevation shall be provided by the manufacturer in the bid.

e. User Interface:

Displays shall provide interface for programming and display of VFD and chiller parameters. Viewable parameters include:

1) Operating, configuration and fault messages
2) Frequency in Hz
3) Load side voltage and current (at the VFD)
4) kW (on the VFD interface)

f. VFD Performance:

1) VFD full load efficiency shall meet or exceed 97% at 100% VFD Rated Ampacity.
2) Base motor frequency shall be either 50 or 60 Hz.

g. VFD Electrical Service (single point power):

1) VFD shall have input circuit breaker with minimum 65,000 amp interrupt capacity.
2) VFD shall have standard 15 amp branch oil pump circuit breaker to provide power for chiller oil pump.
3) VFD shall have standard 4 KVA control power transformer with circuit breaker to provide power for oil heater, VFD controls, and chiller controls.
4) The branch oil pump circuit breaker and control power transformer shall be factory wired.
5) Input power shall be 380/480 vac, ±10 percent, 3 phase, 50/60 Hz, ±3 Hz.

h. Discrete Outputs:

115-v discrete contact outputs shall be provided for:

1) Chilled water pump
2) Condenser water pump
3) Alarm status.

i. Analog Output:

An analog (4 to 20 mA) output for head pressure reference shall be provided. This signal shall be suitable to control a 2-way or 3-way water regulating valve in the condenser piping.

j. Protection (the following shall be supplied):

1) Under-voltage
2) Over voltage
3) Phase loss
4) Phase unbalance protection
5) Programmable auto re-start after loss of power
6) Motor overload protection (NEMA Class 10)
7) Motor over temperature protection

k. VFD Testing:

The VFD shall be factory mounted, wired, and tested on the chiller prior to shipment.

23. Unit-Mounted Variable Frequency Drive (575-v VFD) without Built-In Harmonic Filter:

a. Design:

1) VFD shall be air or refrigerant cooled, microprocessor based, pulse width modulated design. Water-cooled designs are not acceptable.
2) Output power devices shall be insulated gate bipolar transistors (IGBTs).
3) Converter section with full-wave fixed-diode bridge rectifier shall convert incoming fixed voltage/frequency to fixed DC voltage.
4) DC link shall filter and smooth the converted DC voltage.
5) Transistorized inverter and control regulator shall convert fixed DC voltage to a sinusoidal PWM waveform.
6) Integrated controls shall coordinate the motor speed to optimize chiller performance over a wide variety of operating conditions.

b. Enclosure:

1) Pre-painted, unit-mounted NEMA 1 cabinet shall include hinged, lockable doors and removable lifting lugs.
2) VFD shall have an Amp Interrupt Capacity (AIC) of 35,000 amps and a short circuit current rating of 25,000 amps.
3) Provisions to padlock main disconnect handle in the "Off" positions shall be provided. Mechanical interlock to prevent opening cabinet door with disconnect in the "On" position or moving disconnect to the "On" position while the door is open shall be provided.
4) Provisions shall be made for top entry of incoming line power cables.

c. Heat Sink:

1) The heat sink shall be refrigerant cooled. Heat sink and mating flanges shall be suitable for ASME design working pressure of 185 psig (1276 kPa).
2) Refrigerant cooling shall be metered by integrated standard controls to maintain heat sink temperature within acceptable limits for ambient temperature.

d. VFD Rating:
   1) Drive shall be suitable for nameplate voltage ±10%.
   2) Drive shall be suitable for continuous operation at 100% of nameplate amps and 150% of nameplate amps for 3 seconds.
   3) Drive shall comply with applicable UL and NEMA standards.
   4) Drive shall be suitable for operation in ambient temperatures between 40 and 104 F (4.4 and 40 C), 95% humidity (non-condensing) for altitudes up to 3300 ft (1006 m) above sea level. Specific drive performance at jobsite ambient temperature and elevation shall be provided by the manufacturer in the bid.

e. User Interface:

   Displays shall provide interface for programming and display of VFD and chiller parameters. Viewable parameters include:
   1) Operating, configuration and fault messages
   2) Frequency in Hz
   3) Load side voltage and current (at the VFD)
   4) kW (on the VFD interface)

f. VFD Performance:
   1) VFD full load efficiency shall meet or exceed 97% at 100% VFD Rated Ampacity.
   2) Base motor frequency shall be 60 Hz.

g. VFD Electrical Service: (single point power):
   1) VFD shall have input circuit breaker with minimum 35,000 amp interrupt capacity.
   2) VFD shall have standard 15 amp branch oil pump circuit breaker to provide power for chiller oil pump.
   3) VFD shall have standard 3 KVA control power transformer with circuit breaker to provide power for oil heater, VFD controls, and chiller controls.
   4) The branch oil pump circuit breaker and control power transformer shall be factory wired.
   5) Input power shall be 575 vac, ±10 percent, 3 phase, 60 Hz, ±3 Hz.

h. Discrete Outputs:

   115-v discrete contact outputs shall be provided for:
   1) Chilled water pump
   2) Condenser water pump
   3) Alarm status.

i. Analog Output:

   An analog (4 to 20 mA) output for head pressure reference shall be provided. This signal shall be suitable to control a 2-way or 3-way water regulating valve in the condenser piping.

j. Protection (the following shall be supplied):
   1) Under-voltage
   2) Over voltage
   3) Phase loss
   4) Phase unbalance protection
   5) Programmable auto re-start after loss of power
   6) Motor overload protection (NEMA Class 10)
   7) Motor over temperature protection

k. VFD Testing:

   The VFD shall be factory mounted, wired, and tested on the chiller prior to shipment.

Manufacturer reserves the right to discontinue, or change at any time, specifications or designs without notice and without incurring obligations.

Maximize Efficiency with Series Counterflow (SCF)

- Up to 25 percent better full load efficiency than ASHRAE 90.1 2015 standards*
- Up to 47 percent better part load efficiency than ASHRAE 90.1 2015 standards*
- Up to 6 dbA quieter than parallel chillers
- Identical surge free screw chillers provide ease of operation and flexibility
- Constant or variable flow, N or N + 1 arrangements
- Simple AdvanTE^{3}C plant controls optimize pumps, towers and chillers

AdvanTE^{3}C
United Technologies
Experts in Efficiency and Environment

*(2) 250 ton (879 kW) variable speed 23XRV chillers in series counterflow arrangement.

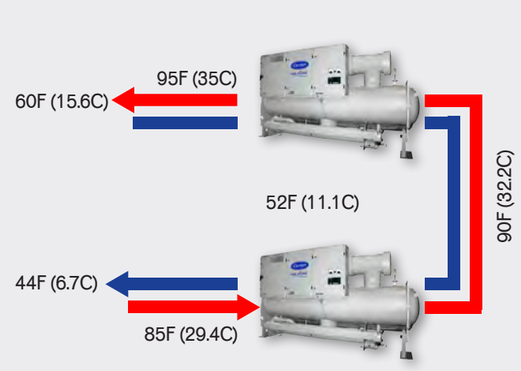

23XRV in series counterflow as low as 0.27 kW/Ton (NPLV)

Benefits at a Glance

For Building Owners and Managers

- Reduces operating expenses
- Easy to maintain
- Quiet operation
- Reliable operation
- Environmentally responsible refrigerant

For Consulting Engineers

- Exceeds ASHRAE 90.1
- HFC refrigerant
- High-efficiency optimization
- Ideal for replacement projects

For Contractors

- Easy to disassemble
- Diagnostic controls
- Reliable performance
- Reduces installation expensesc

SEISMICOMPLIANT*

*Meets IBC 2006, ASCE-7-05, CBC 2007 and OSHPD seismic requirements.

Peace of Mind

Carrier's 19/23 series AquaEdge chillers are provided with a 0.1 percent leak-proof warranty.* Carrier provides coverage against refrigerant leaks for the first five years of ownership. For customers who have a service agreement with Carrier Commercial Service, Carrier will extend the warranty for the life of the chiller.

* For U.S. and Canada only. Warranty is not available in all markets.

ASHRAE 90.1 COMPLIANT

AHRI CERTIFIED® www.ahridirectory.org Water-Cooled Water Chilling and Heat Pump Water-Heating Packages AHRI Standards 550/590 and 551/591

ASME

Certified System ISO 9001 QMI-SAI Global

Water cooled chillers within the scope of the AHRI WCCL certification program are certified in accordance with the AHRI Water-Cooled Water-Chilling and Heat Pump Water-Heating Packages Certification Program, which is based on AHRI Standard 550/590 (I-P) and AHRI Standard 551/591 (SI). Certified units may be found in the AHRI Directory at www.ahridirectory.org.

Carrier
United Technologies
turn to the experts

1-800-CARRIER www.commercial.carrier.com

© Carrier Corporation 2017 Cat. no. 04-811-50051
Manufacturer reserves the right to discontinue, or change at any time, specifications or designs, without notice and without incurring obligations.

Carrier® AquaEdge™ 23XRV Chiller with Greenspeed® Intelligence

High Efficiency Variable Speed Screw Chiller
175 to 550 Nominal Tons (879 to 1,934 kW)

Carrier
United Technologies
turn to the experts

THE ULTIMATE IN SIMPLICITY LEADS TO THE MOST ROBUST AND EFFICIENT CHILLER

You will not find a better chiller...period!

Carrier® AquaEdge™ 23XRV Chiller with Greenspeed® Intelligence

Unparalleled Efficiency: First Chiller to Break the 0.300 IPLV Barrier

GIVEN THE CHOICE, AREN'T FEWER PARTS BETTER?

START YOUR PATH TO HVAC SATISFACTION HERE

Three Moving Parts

The robust dependable performance of 23XRV chillers stems from Carrier's advanced compression technology. Brilliant in its simplicity, the only moving parts are the screw rotors and variable-speed electric motor.

Simple Elegant Design

- No surge
- No purge
- No shaft seals
- No guide vanes
- No slide valves
- No chlorine
- No phase-out
- No refrigerant pumps
- No pressurization systems
- No bearing capacitors to change
- No pumps, hoses or clamps for VFD
- No glycol cooling required for VFD
- No motor heat rejection to the mechanical room

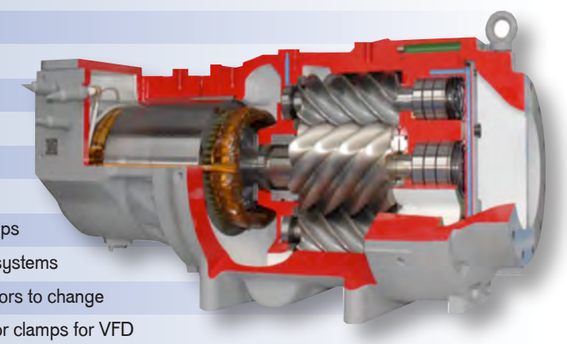

"R" compressor shown

SIMPLE COMPRESSION

ROBUST

DO YOU WANT COMPLEX... OR SOMETHING THAT ACTUALLY WORKS?

23XRV compressor bearings have a minimum life of >50 years without scheduled maintenance.

IS YOUR CHILLER THIS EXTREME?

- Running without cooling tower fans
- Running with condenser water >105 degrees
- Running with stuck bypass valve
- Running with undersized condenser pumps
- Just running...when you need it most

Data recorders in Arkansas capture the extreme conditions a 23XRV can be subjected to and just keep on running. The tower fan failed at this industrial site and the 23XRV continued to operate with entering condenser water at or above 105 degrees F until the fan was repaired. Can your chiller do this?

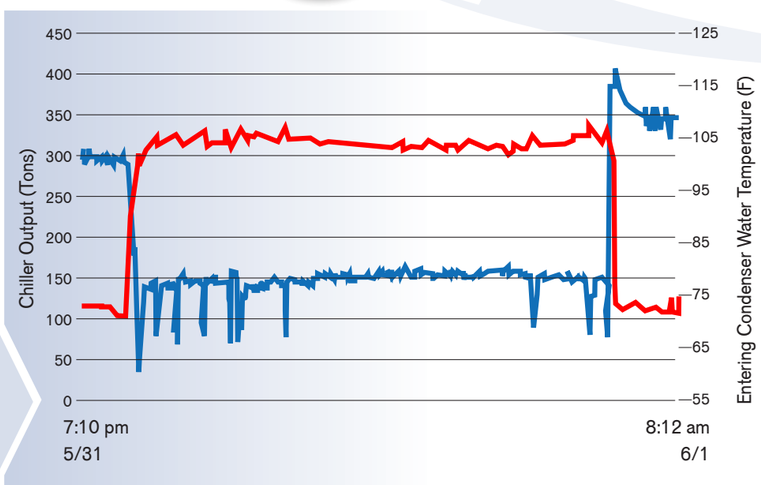

IS YOUR CHILLER THIS FLEXIBLE?

Maximum Tons per Amp

For an MCA of 400 the maximum capacities are as follows:

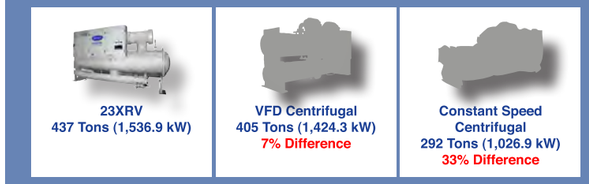

- Higher power factor results in lower Minimum Circuit Ampacity (MCA)
- Can reduce wire size.
- Can reduce breaker size.

23XRV can help increase capacity of old chiller plants using existing wires.

* - AHRI Operating Conditions: 44F LCWT/2.40 gpm/Ton (6.67C LCWT/0.4305 L/(s-kW)) 85F ECdWT/3.00 gpm/Ton (29.44C ECdWT/0.5382 L/(s-kW)

NO CHILLER CAN MATCH THE 23XRV'S PERFORMANCE AND EFFICIENCY <0.30 kW/Ton

Operating Range

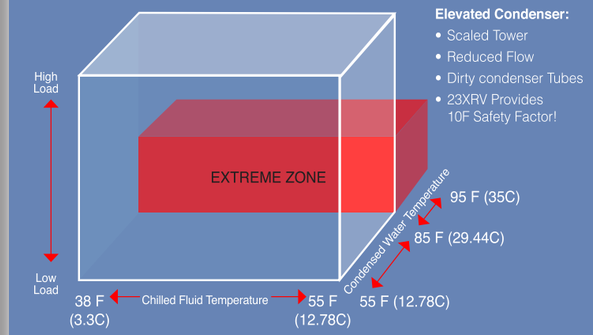

Maximum Tons per Amp

The 23XRV chiller can give you more tons per amp than a constant speed centrifugal chiller or even a variable speed drive centrifugal chiller!

Wide Operating Range

So flexible the same identical 23XRV chiller can be utilized in Seattle, WA and Guatemala.

FLEXIBLE

UNMATCHED PERFORMANCE

Transients

The 23XRV has the capability to react to changes in the system at a rate of 70 percent per minute. This allows more flexibility within the chiller system and can also result in a smaller loop volume requirement.

Lowest Life Cycle Chiller

Because of its simple, speed-optimizing operation, 23XRV chillers deliver balanced efficiency across a wide range of conditions, which can help earn LEED credits in the energy and atmosphere category. 23XRV efficiency at 75 percent load is up to 17 percent more efficient than other variable speed chillers.

Speed Turndown

The 23XRV can achieve 75 percent speed reduction versus just 35 percent for centrifugal compressors. The more speed reduction means more energy savings.

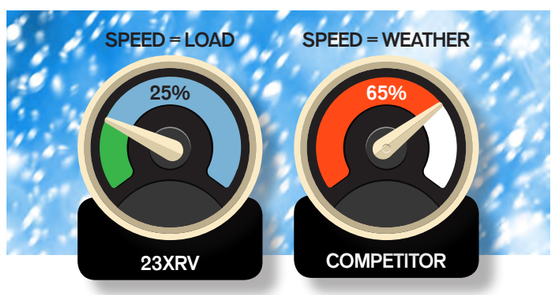

PRODUCT CUT SHEETS

ECM-7 Building Automation System

Including Metering, Butterfly Control Valves and Variable Frequency Drives

EIMK Industrial Ethernet Media Converters

Making the Copper to Fiber Connection

The EIMK Skorpion Media Converter series makes the conversion of an Ethernet copper segment to fiber simple. By operating full-duplex at 100 Mbps provides the highest possible performance on 100 Mbps links. The EIMK is a true media converter and not just a two-port Ethernet switch. Therefore performance is enhanced by not introducing the store-and-forward data latency inherent in a switch. Both multimode and single-mode models are available with SC connectors, ST connectors model is only available in multimode. Fiber distances of up to 15 km are possible with the single-mode model — up to 2 km with the multimode models. On the copper side, both MDI and MDIX ports are available to compliment either an end station port or a switch port.

- Plug-and-Play operation
- 100BASE-TX/100BASE-FX conversion
- Shielded RJ-45 and SC/ST-style fiber optic connectors
- Full-duplex operation
- MDI and MDIX copper ports
- Far End Fault feature

- DIN-rail mounting
- Rugged metal enclosure
- Diagnostic LEDs
- Enhanced EMC compliance
- UL 508 listed, c-UL listed, CE mark
- 24 VAC/VDC powered

Overview

Each of the three models supports full-duplex operation for 100BASE-TX and 100BASE-FX segments. Two models support multimode fiber optic connections: the EIMK-100T/FT makes the fiber optic connection via ST-style connectors, whereas the EIMK-100T/FC does so via SC connectors. The model EIMK-100T/FCS supports single-mode fiber via SC connectors. Maximum distance with 62.5/125 µm multimode fiber cables is 2 km while single-mode fiber can span up to 15 km.

Two RJ-45 connectors (one MDIX port and one MDI port) allow either straight-through or crossover copper cabling. Link and activity LEDs allow troubleshooting on both the copper and fiber sides. Far End Fault feature allows the stations on both ends of the fiber to indicate established link (Link LED on) or indicate if there is a half break or no link (Link LED off). Link LEDs also indicate if a copper Ethernet connection is established. If a half-break or no link on the fiber side occurs, the copper port will also go down. This provides network fault indication on both ends. There must be a valid link on both copper and fiber sides in order for link LEDs to light up solid, indicating a complete connection. Activity (ACT) LEDs indicate data traffic when flashing.

All units mount on TS-35 DIN-rail and operate from either a 24 V AC or DC power source while offering redundant power connections. By incorporating a half-wave rectifier design, the sharing of the power source with other half-wave devices is possible.

Designed for commercial and industrial Ethernet applications, all models comply with EMC immunity and emissions compatibility standards for industrial environments.

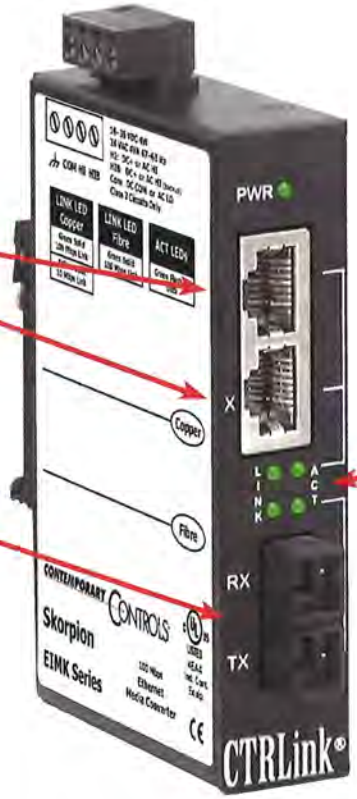

RJ-45 Ethernet Connectors
Both an MDI connector (to a switch) and MDIX connector (to an end station) are available.

Fiber Connectors
Multimode models are available with either ST or SC style connectors while the single mode version is available with SC style connectors.

Diagnostic LEDs
Diagnostic LEDs for both copper and fiber sides.

Link = green with an established link
Activity = green and flashes with data

Specifications

Power Requirements	10–36 VDC ±10% 3W or 24 VAC ±10% 5VA 47–63 Hz
Operating Temperature	0°C to 60°C
Storage Temperature	–40°C to 85°C
Relative Humidity	10–95%, non-condensing
Protection	IP30
Mounting	TS-35 DIN-rail
Shipping Weight	1 lb (0.45 kg)

Fiber Transceivers

	TX Power (min)	***RX (min)***	***Wavelength***	***Optical Budget***
Multimode	–19 dBm	–32 dBm	1310 nm	13 dB
Single-mode	–15 dBm	–32 dBm	1310 nm	17 dB

Ethernet Communications

IEEE 802.3 100 Mbps data rate
100BASE-TX using RJ-45 connectors (MDI and MDIX), 100 m (max)
100BASE-FX multimode using SC or ST connectors, 2 km (max)
100BASE-FX single-mode using SC connectors, 15 km (max)

LEDs

Power	Green = power OK
Link	Green = communication established
Activity	Green = data transmissions occurring (flashes)

Regulatory Compliance

CE Mark; CFR 47, Part 15 Class A; RoHS;
UL 508 Industrial Control Equipment

RJ-45 Connector Pin Assignments

Pin	Function
1	TD+
2	TD–
3	RD+
4	N/C
5	N/C
6	RD–
7	N/C
8	N/C

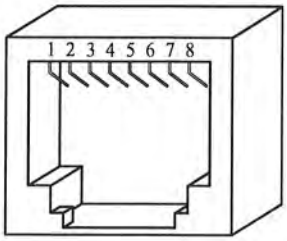

Mechanical Drawing

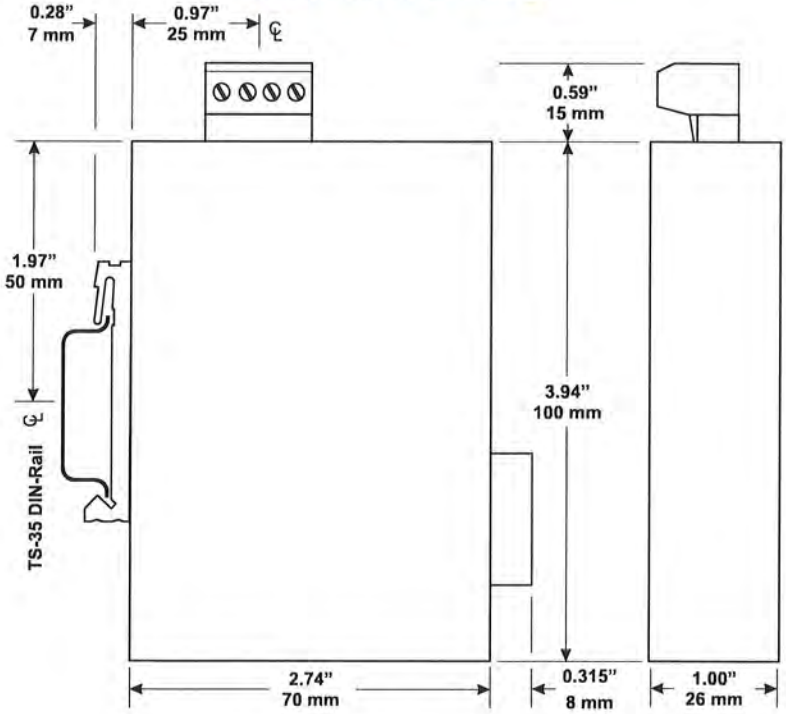

Power Considerations

Applied voltage must be in the specified range and deliver a current commensurate with power consumption. The recommended size for solid power conductors is 16–20 AWG; and for stranded conductors use 16–18 AWG. Zero volts (COM) is isolated from chassis (earth). Input connections are reverse-polarity protected.

Input power: 10–36 VDC or 24 VAC ± 10%, 47–60 Hz.
Connecting chassis to earth or using a backup source is always optional.

All options shown are for use in Class 2 circuits if applied voltage is limited to 30V DC.

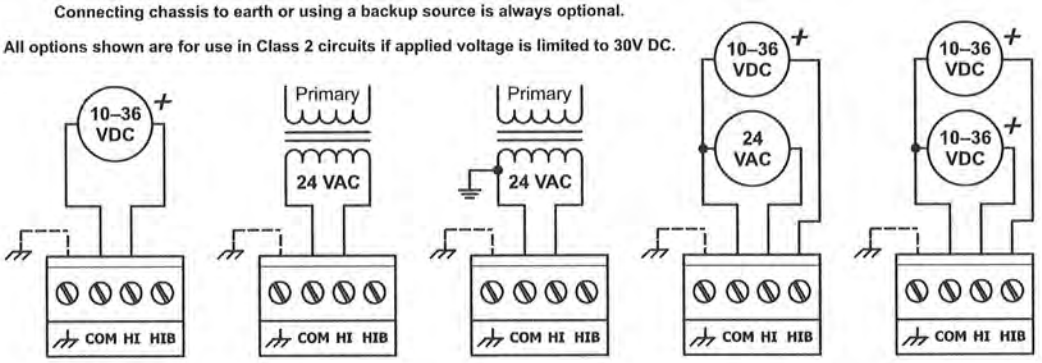

DC Powered | AC Powered | AC Powered with Grounded Secondary | AC Powered with DC Backup | Redundant DC Powered

Typical Media Converter Installations

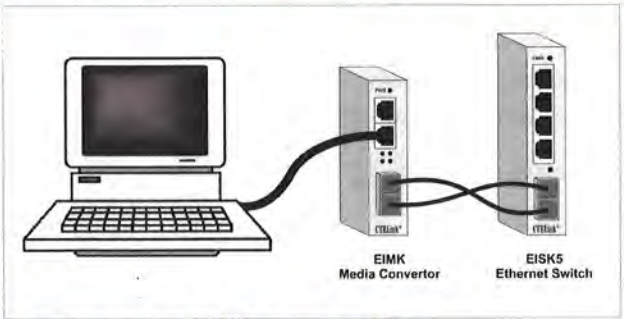

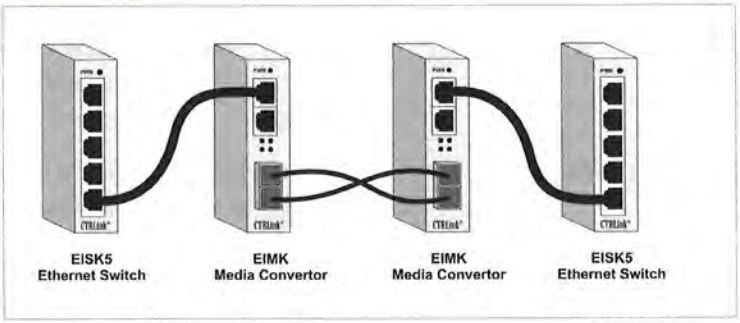

Ordering Information

Model	*Description*
EIMK-100T/FT	Skorpion 100BASE-TX/100BASE-FX MM ST-Fiber Media Converter
EIMK-100T/FC	Skorpion 100BASE-TX/100BASE-FX MM SC-Fiber Media Converter
EIMK-100T/FCS	Skorpion 100BASE-TX/100BASE-FX SM SC-Fiber Media Converter

United States
Contemporary Control Systems, Inc.
2431 Curtiss Street
Downers Grove, IL 60515
USA

Tel: +1 630 963 7070
Fax:+1 630 963 0109
info@ccontrols.com

China
Contemporary Controls (Suzhou) Co. Ltd
11 Huoju Road
Science & Technology Industrial Park
New District, Suzhou
PR China 215009

Tel: +86 512 68095866
Fax: +86 512 68093760
info@ccontrols.com.cn

United Kingdom
Contemporary Controls Ltd
14 Bow Court
Fletchworth Gate
Coventry CV5 6SP
United Kingdom

Tel: +44 (0)24 7641 3786
Fax:+44 (0)24 7641 3923
info@ccontrols.co.uk

Germany
Contemporary Controls GmbH
Fuggerstraße 1 B
04158 Leipzig
Germany

Tel: +49 341 520359 0
Fax: +49 341 520359 16
info@ccontrols.de

www.ccontrols.com

data

SHEET

EISK8 Skorpion Fibre Switches

Cost Effective, 100 Mbps-speed — Compact Size

EISK8 Skorpion fibre switches are eight-port unmanaged Ethernet switches that provides 100 Mbps performance on all ports to accommodate a range of control devices and workstations commonly found in an automation project. For 10 Mbps legacy devices, the switches automatically reduce port-speed. These low-cost compact units have a rugged metal enclosure and are intended for installation in control panels using DIN-rail mounting.

These are a plug-and-play Ethernet switches that require no configuration. All copper ports automatically configure their data rate and duplex using the Auto-negotiation protocol. Depending on the capability of the link partner, communication is set at 10 or 100 Mbps and at either half- or full-duplex. Each port accommodates either a straight-through or crossover cable using the Auto-MDIX protocol.

Each unit is powered from a low-voltage source (either AC or DC). Redundant power connections are provided for back-up power schemes. LEDs assist in troubleshooting.

- Plug-and-Play operation
- 10BASE-T/100BASE-TX/100BASE-FX
- Shielded RJ-45 connectors
- Choice of fibre connectors
- Auto-negotiation of speed and duplex
- Auto-MDIX supports cable inversion

- DIN-rail mounting
- Rugged metal enclosure
- Diagnostic LEDs
- Enhanced EMC compliance
- UL 508 listed, c-UL listed, CE mark
- 24 VAC/VDC powered

CTRLink®

Overview

The Skorpion Switch is intended for control panel installations where DIN-rail space is at a premium by requiring a width of only 41 mm of rail space. A metal DIN-rail clip attached to the aluminium enclosure can survive the toughest installation. A writable side label allows the installer an opportunity to document field cabling locations right on the unit.

Each unit is powered from either a 10–36 VDC or 24 VAC (±10%) source. A half-wave rectified low-voltage power supply allows the sharing of power with other 24 VAC/VDC control devices from a common power supply. With redundant power connections, a backup power scheme can be supported. A removable power connector facilitates the servicing of the unit.

LEDs built into each RJ-45 connector indicate data rate and activity on each copper port — greatly assisting in troubleshooting.

Each unit is UL 508 Listed and c-UL Listed for Industrial Control Equipment, complies with CFR 47 Part 15 Class A, carries the CE Mark and each is RoHS compliant.

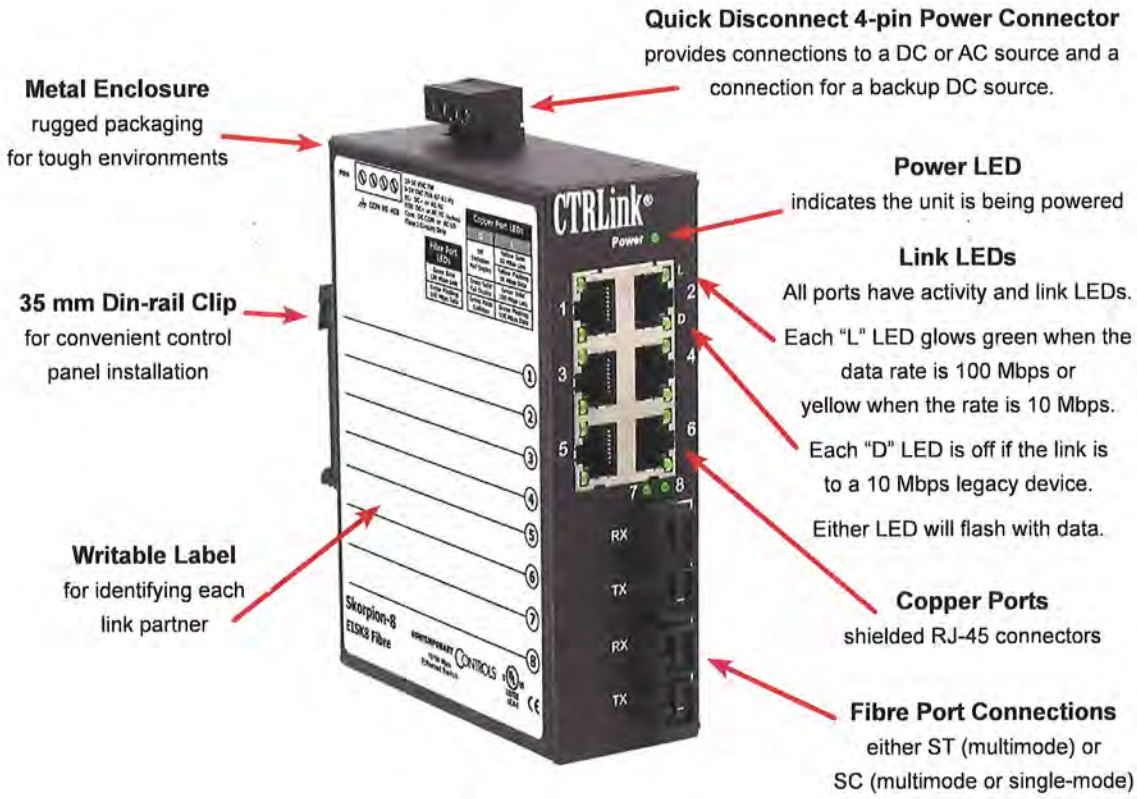

Specifications

Power Requirements	10–36 VDC 6 W or 24 VAC ±10% 12 VA 47–63 Hz
Operating Temperature	0°C to 60°C
Storage Temperature	–40°C to 85°C
Relative Humidity	10–95%, non-condensing
Protection	IP30
Mounting	TS-35 DIN-rail
Shipping Weight	1 lb (0.45 kg)
Ethernet Communications	IEEE 802.3 10/100 Mbps data rate using RJ-45 connectors, 100 m (max)
LEDs	Power: Green = power OK "L" LEDs: Green = 100 Mbps communication established Yellow = 10 Mbps communication established Flashing = data transmissions occurring "D" LEDs: Green = Full-duplex communication established Off = Half-duplex communication established
Regulatory Compliance	CE Mark; CFR 47, Part 15 Class A; RoHS; UL 508 Industrial Control Equipment

RJ-45 Connector Pin Assignments

Pin	Function
1	TD+
2	TD–
3	RD+
4	Not Used
5	Not Used
6	RD–
7	Not Used
8	Not Used

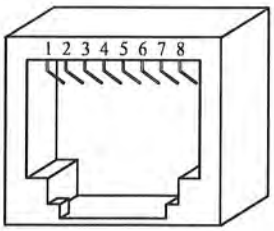

Mechanical Drawing

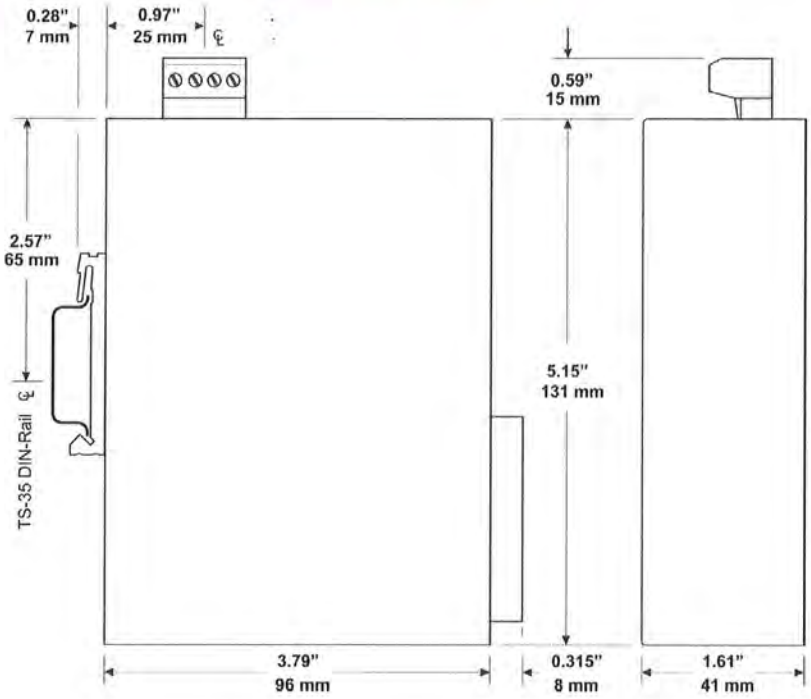

Power Considerations

Applied voltage must be in the specified range and deliver a current commensurate with power consumption. The recommended size for solid power conductors is 16–20 AWG; and for stranded conductors use 16–18 AWG. Zero volts (COM) is isolated from chassis (earth). Input connections are reverse-polarity protected.

Input power: 10–36 VDC or 24 VAC ± 10%, 47–60 Hz.
Connecting chassis to earth or using a backup source is always optional.

All options shown are for use in Class 2 circuits if applied voltage is limited to 30V DC.

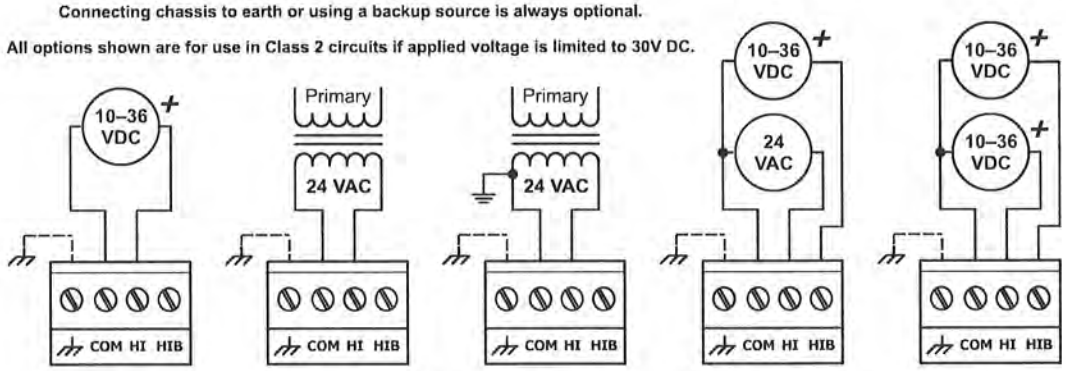

DC Powered | **AC Powered** | **AC Powered with Grounded Secondary** | **AC Powered with DC Backup** | **Redundant DC Powered**

Typical Switch Installations

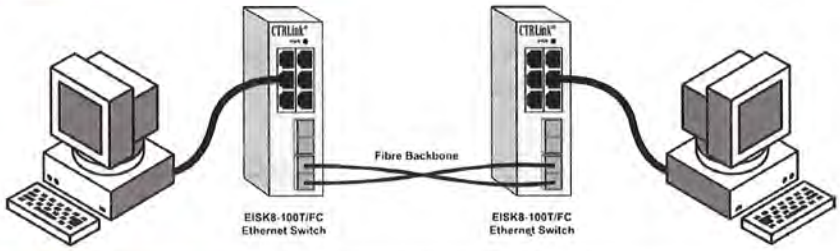

Ordering Information

Model	*Description*
EISK8-100T/FC	Skorpion 6-Port 10/100Mbps 2-Port MM SC-fiber Switch
EISK8-100T/FCS	Skorpion 6-Port 10/100Mbps 2-Port SM SC-fiber Switch
EISK8-100T/FT	Skorpion 6-Port 10/100Mbps 2-Port MM ST-fiber Switch

United States
Contemporary Control Systems, Inc.
2431 Curtiss Street
Downers Grove, IL 60515
USA

Tel: +1 630 963 7070
Fax:+1 630 963 0109

info@ccontrols.com
www.ccontrols.com

China
Contemporary Controls (Suzhou) Co. Ltd
11 Huoju Road
Science & Technology
Industrial Park
New District, Suzhou
PR China 215009

Tel: +86 512 68095866
Fax: +86 512 68093760

info@ccontrols.com.cn
www.ccontrols.asia

United Kingdom
Contemporary Controls Ltd
14 Bow Court
Fletchworth Gate
Coventry CV5 6SP
United Kingdom

Tel: +44 (0)24 7641 3786
Fax:+44 (0)24 7641 3923

info@ccontrols.co.uk
www.ccontrols.eu

Germany
Contemporary Controls GmbH
Fuggerstraße 1 B
04158 Leipzig
Germany

Tel: +49 341 520359 0
Fax: +49 341 520359 16

info@ccontrols.de
www.ccontrols.eu

MNB-300 BACnet Unitary Controller

I/A Series Micronet MNB-300

The TAC I/A Series™ MicroNet™ MNB-300 BACnet™ Unitary Controller is an interoperable controller with native BACnet MS/TP communications support. The controller features Sensor Link (S-Link) support, LED status and output indication, screw terminal blocks, as well as a panel mount sub-base with removable electronics module.

When programmed using WorkPlace Tech Tool, the Unitary controller provides a wide range of control strategies for packaged rooftop, heat pump, fan coil, unit ventilator, and similar applications.

Stand Alone or Connected

The TAC I/A Series BACnet Unitary Controller can function either in a standalone mode or as part of a BACnet building automation system (BAS) network.

SPECIFICATIONS

HARDWARE

Dimensions
7.0 in. W x 3.94 in. H x 2.19 in. D

(178 mm x 100 mm x 56 mm)

Enclosure
Optional wall-mount enclosure conforms to NEMA-1 requirements.

Cover meets UL94V-0 flammability ratings.

Mounting
Panel mount.

Wiring Terminals
I/O Points

Fixed screw terminals; up to two AWG #14 (2.08 mm²) or smaller wire.

Power and MS/TP

Removable screw terminals; single AWG #14 (2.08 mm²) wire or up to two AWG #18 (0.823 mm²) or smaller wires.

ELECTRICAL

Power Supply Input
20.4 to 30 Vac, 50/60 Hz.

Maximum Power Consumption
16 VA at 24 Vac.

ENVIRONMENT

Operating Temperature
-40 to 140 °F (-40 to 60 °C)

Shipping and Storage Temperature
-40 to 160 °F (-40 to 71 °C)

Humidity
5 to 95% RH, non-condensing

AGENCY LISTINGS

US
FCC Part 15, Class A

UL 916, File #E71385 Category PAZX

UL 864, Category UUKL, File #S5381 Smoke-Control Equipment

Canadian
UL Listed to Canadian Safety Standards (CAN/CSA 22.2)

CUL Listed to Standards ULC/ORD-C100-92 (Smoke Control System Equipment) and CAN-ULC-S527 (Control Units for Fire Alarm Systems)

Australian
Meets requirements to bear the C-Tick Mark

European Community
EMC Directive 89/336/EEC, EN61326

INPUTS AND OUTPUTS

Universal Inputs (6)
Universal Input characteristics are software-configured to respond to one of the following input types:

10k ohm Thermistor w/ 11k ohm Shunt Resistor

Sensor operating range -40 to 250 °F (-40 to 121 °C) range. TSMN-57011-850, TS-5700-850 Series or equivalent.

Specifications continued on next page.

Schneider Electric

Specifications continued from first page.

1k ohm Balco Input

-40 to 250 °F (-40 to 121 °C) range. TSMN-81011, TS-8000 Series or equivalent.

1k ohm Platinum Input

-40 to 240 °F (-40 to 116 °C) range. TSMN-58011, TS-5800 Series or equivalent.

1k ohm Resistive

0 to 1.5k ohms.

10k ohm Resistive

0 to 10.5k ohms.

Analog Voltage

0 to 5 Vdc.

Analog Current

Range 0 to 20 mA, requires an external 250 ohm shunt resistor (AD-8969-202).

Digital Input

Dry switched contact. Detection of closed switch requires less than 300 ohms. Detection of open switch requires more than 2.5k ohms.

Standard Pulse Input (UI1-UI6)

Minimum Rate

1 pulse per 4 minutes.

Maximum Rate

1 pulse per second.

Fast Pulse Input (UI1)

Minimum Rate

1 pulse per 4 minutes.

Maximum Rate

10 pulses per second.

Digital Outputs - Triac (6)

12 VA at 24 Vac, 50/60 Hz, each output individually isolated.

Universal Outputs (3)

Current

0 to 20 mA (output load from 80 to 550 ohms).

Voltage

0 to 10 V (with external 500 ohms, 1/2 W, 1% resistor).

Capability to Drive Functional Devices

RIBUI1C Relay (UO configured for 0 to 20 mAdc, no external resistor).

BACnet is a registered trademark of ASHRAE. ASHRAE does not endorse, approve, or test products for compliance with ASHRAE standards. Compliance of listed products to the requirements of ASHRAE Standard 135 is the responsibility of BACnet International (BI). BTL is a regstered trademark of BI.

COMMUNICATIONS

BACnet Networks

The TAC I/A Series MicroNet BACnet Unitary Controller incorporates an isolated EIA-485 (formerly RS-485) transceiver for BACnet MS/TP communications at 9.6 up to 76.8 kbaud using standard MS/TP wiring methods. Up to 128 TAC I/A Series MicroNet BACnet controllers can be connected to an MS/TP sub-net without repeaters.

S-Link

The Sensor Link (S-Link) communications wiring provides power and a communication interface for one MN-Sx MicroNet sensor. The various MN-Sx sensors can provide room temperature, room humidity, setpoint adjustment, and occupancy override. This connection uses two-wire, unshielded cable and is not polarity sensitive. Maximum S-Link bus length is 200 ft (61 m).

BACnet COMPLIANCE

BACnet Application Specific Controller (B-ASC).

FEATURES

- The TAC I/A Series MicroNet BACnet Unitary Controller's sequence of operation and BACnet image are fully programmable, using WorkPlace Tech Tool. The controllers can be applied to all common unitary HVAC applications.
- Capability to function in standalone mode or as part of a TAC I/A Series building automation network.
- Integral MS/TP jack for direct connection of PC with WorkPlace Tech Tool.
- Removable electronics module mates with panel-mounted subbase.
- Removable terminals for power and communications to facilitate commissioning.
- Optional rugged, NEMA 1 plenum-rated sheet metal enclosure.
- MS/TP DIP switch addressable.
- Service pin button for BACnet "I am" message broadcast.
- Isolated EIA-485 (formerly RS-485) transceiver for MS/TP communications.
- MS/TP baud rate selection from 9.6 up to 76.8 kbaud.
- LED indication of MS/TP communication activity, controller status, and UO and DO state.
- Firmware upgradeable over the network.
- Support for S-Link Sensor.

© 2009 Sc[illegible]er Electric. All rights reserved.

INPUTS FROM MN-SX I/A SERIES MICRONET SENSORS

Inputs	Description	MN-Sx Sensor
Space Temperature	32 to 122 °F (0 to 50 °C)	MN-S1, MN-S1HT, MN-S2, MN-S2HT, MN-S3, MN-S3HT, MN-S4, MN-S4HT, MN-S4-FCS, MN-S4HT-FCS, MN-S5 and MN-S5HT
Space Humidity	5 to 95% RH, Non-condensing	MN-S1HT, MN-S2HT, MN-S3HT, MN-S4HT, MN-S4HT-FCS, and MN-S5HT
Adjustable Setpoint	Adjustable within limits set by application programming tool	MN-S3, MN-S3HT, MN-S4, MN-S4HT, MN-S4-FCS, MN-S4HT-FCS, MN-S5, and MN-S5HT
Override Pushbutton	For standalone occupancy control or occupancy override	MN-S2, MN-S2HT, MN-S3, MN-S3HT, MN-S4, MN-S4HT, MN-S5, and MN-S5HT
Fan Operation and Speed	Fan mode selection: On/Off, Speed (Low/Medium/High), or Auto	MN-S4, MN-S4HT, MN-S4-FCS, MN-S4HT-FCS, MN-S5, and MN-S5HT
System Mode	System mode selection: Heat, Cool, Off, or Auto	MN-S4, MN-S4HT, MN-S5, and MN-S5HT
Emergency Heat	Emergency heat mode selection: Enable or Disable	MN-S5 and MN-S5HT

MODELS

Part Number	Description	Inputs/Outputs		
		UI	UO	DO (Triac)
MNB-300	TAC I/A Series MicroNet BACnet Unitary Controller	6	3	6

ACCESSORIES

Part Number	Description	Part Number	Description
MNB-300-ENC	Wall-mount enclosure	S-Link Sensors	Temperature and humidity wall sensors with digital communication
MNB-BASE-300	Controller base assembly only		
MNB-CNTLR-300	Controller cover assembly only	TSMN Series	Room temperature sensors

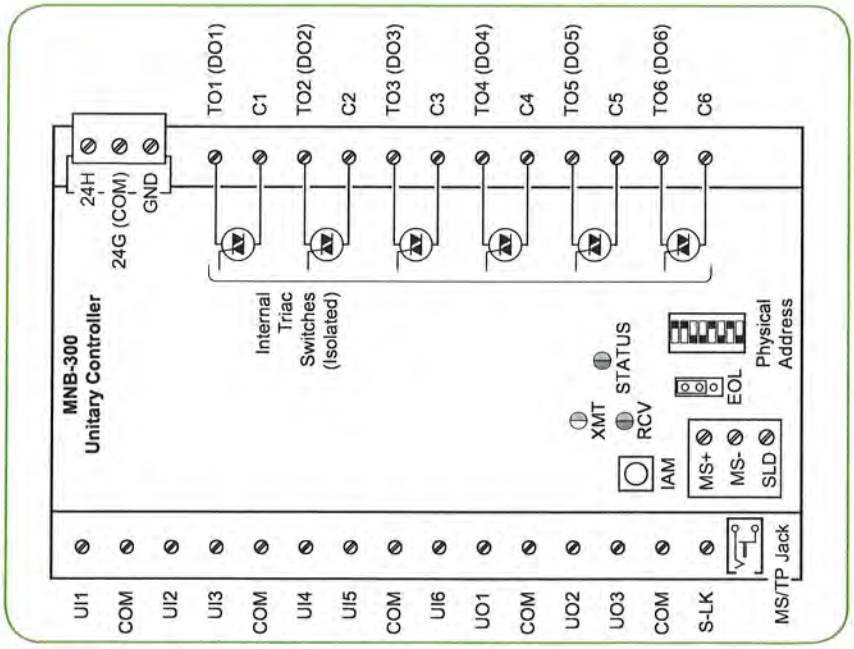

Schneider Electric 1354 Clifford Avenue, P.O. Box 2940, Loves Park, IL 61132-2940, USA 1-888-444-1311 www.schneider-electric.com/buildings

© 2009 Schneider Electric. All rights reserved.

ARCHITECTURE

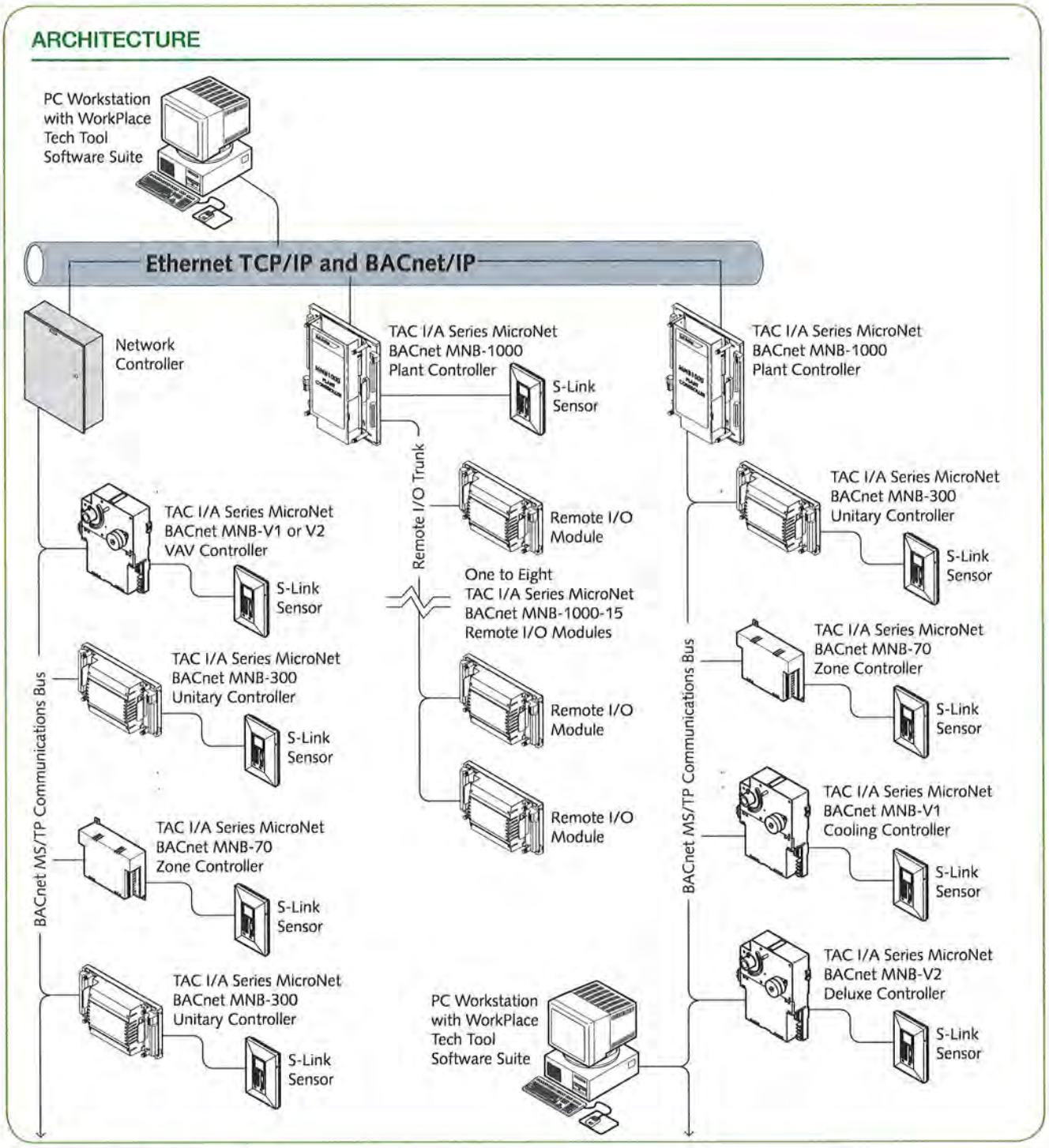

SIGNALING

Distributed, manufactured, and sold by Schneider Electric. I/A Series trademarks are owned by Invensys Systems, Inc. and are used on this product under master license from Invensys. Invensys does not manufacture this product or provide any product warranty or support. For service, support, and warranty information, contact Schneider Electric.

On October 1st, 2009, TAC became the Buildings Business of its parent company Schneider Electric. This document reflects the visual identity of Schneider Electric, however there remain references to TAC as a corporate brand in the body copy. As each document is updated, the body copy will be changed to reflect appropriate corporate brand changes.

All brand names, trademarks and registered trademarks are the property of their respective owners. Information contained within this document is subject to change without notice.

Schneider Electric 1354 Clifford Avenue, P.O. Box 2940, Loves Park, IL 61132-2940, USA 1-888-444-1311 www.schneider-electric.com/buildings

© 2009 Sch ter Electric. All rights reserved.

MicroNet BACnet Plant Controller

SPECIFICATIONS

HARDWARE

Dimensions
10-15/16 H x 8-3/8 W x 2-9/32 D in. (278 x 213 x 58 mm).

Enclosure
Optional rugged sheet metal enclosure conforms to NEMA-1.

Mounting
Panel mount.

Power Supply Input
20.4 to 30 Vac, 50/60 Hz.

Power Consumption
50 VA at 24 Vac.

AGENCY LISTINGS

US
FCC Part 15, Class A.

UL 916, File #E71385 Category PAZX

UL 864, Category UUKL, File #S5381 Smoke-Control Equipment

Canadian
UL Listed to Canadian Safety Standards (CAN/CSA 22.2).

CUL Listed to Standards ULC/ORD-C100-92 (Smoke Control System Equipment) and CAN-ULC-S527 (Control Units for Fire Alarm Systems)

Australian
Meets requirements to bear the C-Tick Mark.

European Community
EMC Directive 89/336/EEC
EN61326

MicroNet BACnet Plant Controller MNB-1000

The TAC I/A Series™ MicroNet™ BACnet™ Plant Controller is an interoperable controller with native BACnet/IP, BACnet Ethernet, and MS/TP communications support and routing functionality between physical networks. The controller features: Sensor Link (S-Link) support; remote I/O support; LED status and output indication; two Ethernet ports; screw terminal blocks; and a panel-mount subbase with a removable electronics module.

The Plant Controller's sequence of operation and BACnet image are fully programmable using WorkPlace Tech Tool, and can be applied to a wide range of mechanical equipment. Typical applications include central station air handlers, VAV air handlers, and cooling towers.

The MicroNet BACnet Plant Controller can function either in a standalone mode or as part of a BACnet building automation system (BAS) network. The MNB-1000 is BACnet Testing Laboratories (BTL) listed as a BACnet Application Specific Controller (B-ASC).

AMBIENT LIMITS

Operating Temperature
-40 to 140 °F (-40 to 60 °C).

Shipping and Storage Temperature
-40 to 160 °F (-40 to 71 °C).

Humidity
5 to 95% non-condensing.

WIRING TERMINALS

Remote I/O (IO+, IO-, SLD)
Removable screw terminals; single AWG #14 (2.08 mm^2) wire or up to two AWG #18 (0.823 mm^2) or smaller wires.

MS/TP (MS+, MS-, SLD)
Removable screw terminals; single AWG #14 (2.08 mm^2) wire or up to two AWG #18 (0.823 mm^2) or smaller wires.

I/O Points
Fixed screw terminals; single AWG #14 (2.08 mm^2) wire or up to two AWG #18 (0.823 mm^2) or smaller wires.

Power
Removable screw terminals; up to two AWG #14 (2.08 mm^2) or smaller wires.

Continued on next page.

Schneider Electric

Continued from first page.

INPUTS FROM MN-SX MICRONET SENSOR

Space Temperature
32 to 122 °F (0 to 50 °C).

Space Humidity
5 to 95% RH, non-condensing.

Local Setpoint
Adjustable within limits set by application programming tool.

Fan Operation and Speed Mode
On/off, speed (low/medium/high), or auto.

System Mode
Heat, cool, off, or auto.

Emergency Heat
Enable or disable.

UNIVERSAL INPUTS (12)

Universal Input characteristics are software-configured to respond to one of the following input types:

10k ohm Thermistor with 11k ohm Shunt Resistor
Sensor operating range -40 to 250 °F (-40 to 121 °C), model TSMN-57011-850, TS-5700-850 series, or equivalent.

1k ohm Balco
-40 to 250 °F (-40 to 121 °C), model TSMN-81011, TS-8000 series, or equivalent.

1k ohm Platinum
-40 to 240 °F (-40 to 116 °C), model TSMN-58011, TS-5800 series, or equivalent.

1k ohm Resistive
0 to 1500 ohms.

10k ohm Resistive
0 to 10.5k ohms.

Analog Voltage
Range 0 to 5 Vdc.

Analog Current
Range 0 to 20 mA; requires external 250 ohm shunt resistor (AD-8969-202).

Digital
Dry switched contact; detection of closed switch requires less than 300 ohms resistance; detection of open switch requires more than 2.5k ohms.

DIGITAL INPUTS (4)

Dry Switched Contact
Detection of closed switch requires less than 300 ohms resistance; detection of open switch requires more than 2.5k ohms.

FAST PULSE INPUT (DIGITAL INPUT ONLY)

Minimum Rate
1 pulse per 4 minutes.

Maximum Rate
10 pulses per second.

DIGITAL OUTPUTS – TRIAC (8)

12 VA at 24 Vac, 50/60 Hz, each output individually isolated.

UNIVERSAL OUTPUTS (8)

0 to 20 mA
Output load from 80 to 550 ohms.

0 to 10 V
With external 500 ohms, 1/2 W, 1% resistor.

Capable of Driving Functional Devices RIBU1C Relay
UO configured for 0 to 20 mAdc, no external resistor.

20 VDC OUTPUT

20 Vdc ±10% at 100 mA.

OPTIONS

MNB-1000-ENC
Wall-mount enclosure

MNB-BASE-1000
Controller Base assembly only

MNB-CNTLR-1000
Controller assembly only

MNB-15
Remote I/O Module

S-Link Sensors
Temperature and humidity Wall Sensors with digital communication

TSMN Series
Room Temperature Sensors

MODEL

Part Number	Inputs and Outputs[a]			
	UI	DI	UO	DO (Triac)
MNB-1000	12	4	8	8

a. The I/O point count can be greatly expanded with the addition of one to eight Remote I/O Modules, each of which adds 15 I/O points. Refer to the MNB-1000-15 Remote I/O Module sales data sheet, F-27487.

© 2013 Schneider Electric. All rights reserved.

FEATURES

- The MicroNet BACnet Plant Controller's sequence of operation and BACnet image are fully programmable using WorkPlace Tech Tool.
- Capability to function in standalone mode or as part of a TAC I/A Series building automation network.
- Removable electronics module mates with panel-mounted subbase.
- Removable terminals for power and communications, to facilitate commissioning.
- Integral MS/TP jack for direct connection of PC with WorkPlace Tech Tool Suite.
- Optional rugged, NEMA 1 sheet metal enclosure.
- MS/TP DIP switch addressable.
- Service pin button for BACnet "I am" message broadcast.
- Isolated EIA-485 (formerly RS-485) transceiver for MS/TP communications.
- MS/TP baud rate selection from 9.6 up to 76.8 kbaud.
- LED indication of MS/TP and Ethernet IP communication activity, controller status, DO state, and UO state.
- Application-programmable LED provides on/off indication of a user-defined application parameter.
- Firmware upgradeable over the network.
- 72 hour, battery-backed real time clock.
- BBMD, remote connectivity across subnets.
- Support for Remote I/O Modules and S-Link Sensor.
- IP/Ethernet bridge.
- BACnet router functionality.

COMMUNICATIONS

BACnet Networks

The MicroNet BACnet Plant Controller incorporates a fully functional BACnet router between its 3 fully configurable communications ports.

MS/TP

Isolated EIA-485 (formerly RS-485) transceiver, providing support for up to 128 MS/TP devices communicating at 9.6 up to 76.8 kbaud, using standard MS/TP wiring methods.

Ethernet/IP

Dual 10/100 Ethernet ports with modular RJ-45 jacks. Both ports are set to be an Ethernet Bridge, saving on network wiring.

BACnet Ethernet

Standard BACnet Ethernet communications.

BACnet/IP

Communications choices are Standard BACnet/IP, BBMD, or Foreign Device.

S-Link

The Sensor Link (S-Link) communications wiring provides power and a communication interface for one MN-Sx TAC I/A Series MicroNet sensor. The various MN-Sx sensors can provide room temperature, room humidity, setpoint adjustment, and occupancy override. This connection uses two-wire, unshielded cable and is not polarity sensitive. Maximum S-Link bus length is 200 ft (61 m).

Remote I/O

The remote I/O communications wiring provides an interface for one to eight optional MNB-1000-15 Remote I/O Modules, which can be used to expand upon the Plant Controller's onboard I/O.

BACnet is a registered trademark of ASHRAE®. ASHRAE does not endorse, approve, or test products for compliance with ASHRAE standards. Compliance of listed products to the requirements of ASHRAE Standard 135 is the responsibility of BACnet International (BI). BTL is a registered trademark of BI.

CONTROLLER TERMINALS

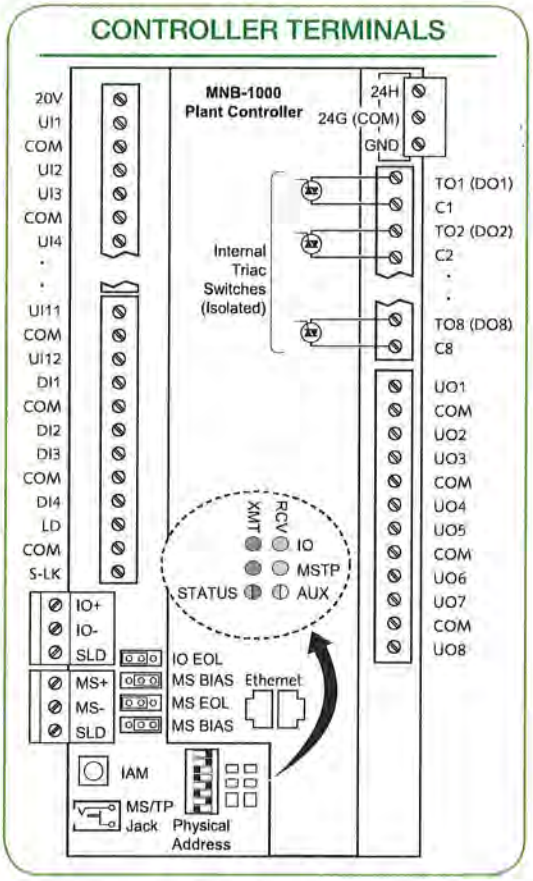

© 2013 Schneider Electric. All rights reserved.

TAC I/A SERIES BACnet TOPOLOGY

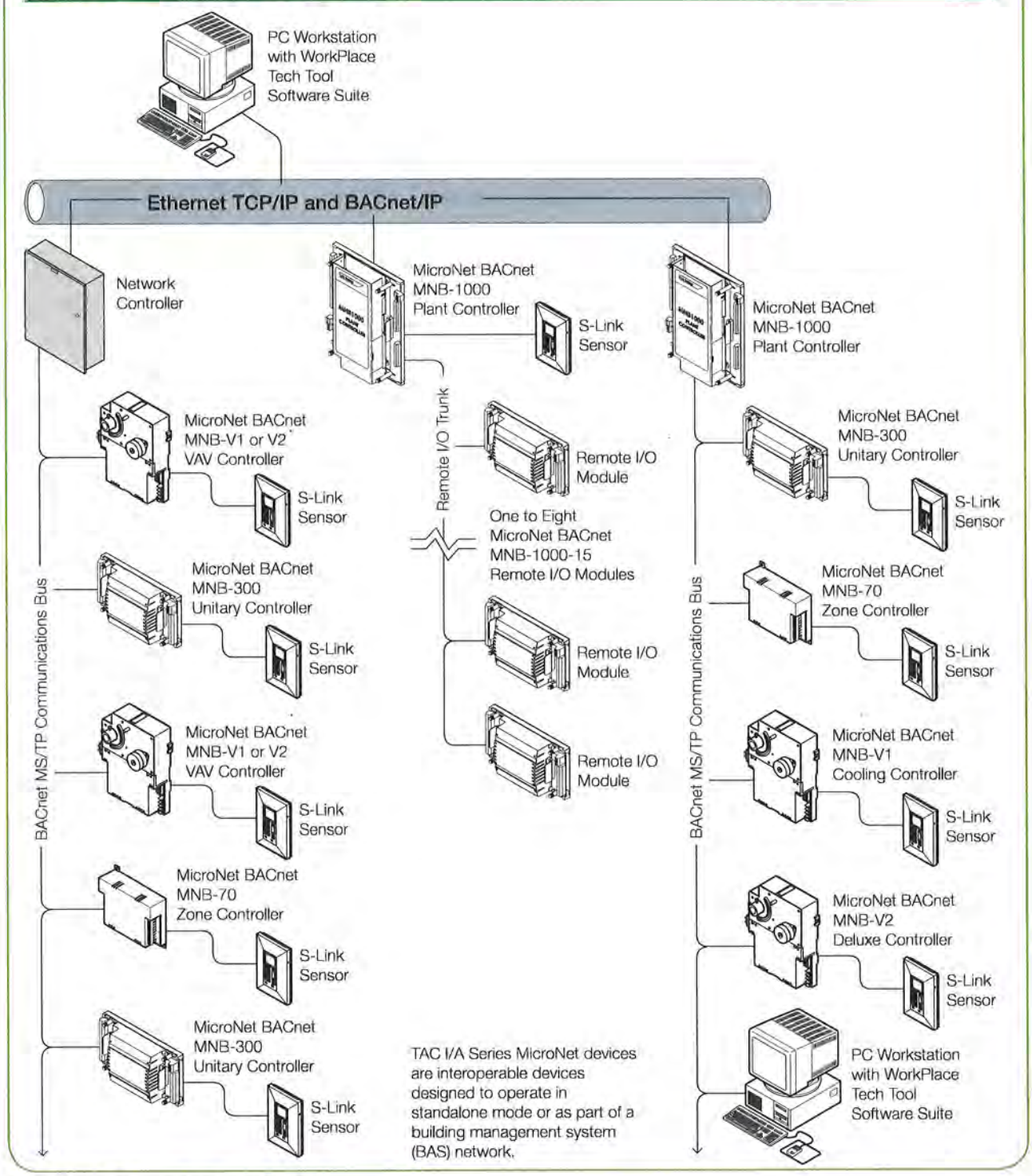

Distributed, manufactured, and sold by Schneider Electric. I/A Series trademarks are owned by Invensys Systems, Inc. and are used on this product under master license from Invensys. Invensys does not manufacture this product or provide any product warranty or support. For service, support, and warranty information, contact Schneider Electric.

All brand names, trademarks and registered trademarks are the property of their respective owners. Information contained within this document is subject to change without notice. All rights reserved.

Schneider Electric 1354 Clifford Avenue, P.O. Box 2940, Loves Park, IL 61132-2940, USA 1-888-444-1311 www.schneider-electric.com

© 2013 Schneider Electric. All rights reserved.

MNB-70 BACnet Zone Controller

SPECIFICATIONS

HARDWARE

Dimensions
3-5/8 H x 5 W x 1-19/32 D in
(92 x 127 x 41 mm).

Enclosure
Conforms to NEMA-1. Meets UL 94-5VA flammability ratings for plenum application use.

Mounting
Panel mount.

Power Supply Input
20.4 to 30 Vac, 50/60 Hz.

Power Consumption
15 VA at 24 Vac plus DO loads.

AGENCY LISTINGS

US
UL 916, File #E71385 Category PAZX FCC Part 15, Class A.

Canadian
UL Listed to Canadian Safety Standards (CAN/CSA 22.2).

Australian
Meets requirements to bear the C-Tick Mark.

BTL Listing
B-ASC

European Community
EMC Directive 89/336/EEC
EN61326

BACnet Zone Controller

The TAC I/A Series® MicroNet BACnet Zone Controller is an interoperable controller with native BACnet MS/TP communications support. The controller features: three universal inputs; three digital (Triac) outputs; one universal output; Sensor Link (S-Link) support; LED status indication; and an "I-Am" button.

When programmed using WorkPlace Tech Tool, the Zone Controller provides a wide range of control strategies for applications such as unit heaters, cabinet heaters, fan coil units, small unit ventilators, heat pumps, and single/dual loop control strategies.

The MicroNet BACnet Zone Controller can function either in a standalone mode or as part of a BACnet building automation system (BAS) network.

AMBIENT LIMITS

Operating Temperature
32 to 131 °F (0 to 55 °C).

Shipping and Storage Temperature
-40 to 160 °F (-40 to 71 °C).

Humidity
5 to 95% non-condensing.

WIRING TERMINALS

Fixed Screw terminals
single AWG #14 (2.08 mm^2) wire or up to two AWG #18 (0.823 mm^2) or smaller wires.

INPUTS FROM MN-SX MICRONET™ SENSOR

Space Temperature
32 to 122 °F (0 to 50 °C).

Space Humidity
5 to 95% RH, non-condensing.

Local Setpoint
Adjustable within limits set by application programming tool.

Override Pushbutton
For standalone occupancy control or occupancy override.

Specifications continued on next page.

Schneider Electric

Specifications continued from first page.

Fan Operation and Speed Mode
On/off, speed (low/medium/high), or auto.

System Mode
Heat, cool, off, or auto.

Emergency Heat
Enable or disable.

UNIVERSAL INPUTS (3)
Universal Input characteristics are software-configured to respond to one of the following input types:

10 k ohm Thermistor with 11 k ohm Shunt Resistor
Sensor operating range -40 to 250 °F (-40 to 121 °C), TAC model TSMN-57011-850, TS-5700-850 series, or equivalent.

1 k ohm Balco
-40 to 250 °F (-40 to 121 °C), TAC model TSMN-81011, TS-8000 series, or equivalent.

1 k ohm Platinum
-40 to 240 °F (-40 to 116 °C), TAC model TSMN-58011, TS-5800 series, or equivalent.

1 k ohm Resistive
0 to 1500 ohms.

10 k ohm Resistive
0 to 10.5 k ohms.

Analog Voltage
Range 0 to 5 Vdc.

Analog Current
Range 0 to 20 mA, requires external 250 ohm shunt resistor (AD-8969-202).

Digital
Dry switched contact; detection of closed switch requires less than 300 ohms resistance; detection of open switch requires more than 2.5 k ohms.

Standard Pulse Input
Minimum Rate
1 pulse per 4 minutes.

Maximum Rate
1 pulse per second.

DIGITAL OUTPUTS – TRIAC (3)

DO1 plus DO2 Rating
24 VA total at 24 Vac, 50/60 Hz, high side switching.

DO3 Rating
12 VA at 24 Vac, 50/60 Hz, high side switching

UNIVERSAL OUTPUT (1)

0 to 20 mA
Output load from 80 to 550 ohms.

0 to 10 V
With external 500 ohms, 1/2 W, 1% resistor.

Capable of Driving Functional Devices

RIBUI1C Relay
UO configured for 0 to 20 mAdc, no external resistor.

MODEL

Model	Inputs and Outputs		
	UI	UO	DO (Triac)
MNB-70	3	1	3

OPTIONS

MNA-FLO-1	TAC MicroNet enclosure, used if wiring to flexible conduit is required
S-Link Sensors	Temperature and humidity wall sensors with digital communication
TSMN Series	Room temperature sensors

© 2012 Sch[illegible]er Electric. All rights reserved.

FEATURES

- The MicroNet BACnet Zone Controller's sequence of operation and BACnet image are fully programmable using WorkPlace Tech Tool. The controller can be applied to all common zone HVAC applications.
- Capability to function in standalone mode or as part of a BACnet building automation network.
- Integral MS/TP jack for direct connection of PC with WorkPlace Tech Tool.
- DIP switch addressable.
- Service pin button for BACnet "I am" message broadcast.
- Isolated EIA-485 transceiver for MS/TP communications.
- MS/TP baud rate selection from 9.6 up to 76.8 kbaud.
- LED indication of MS/TP communication activity and controller status.
- Firmware upgradeable over the network.

ZONE CONTROLLER TERMINALS

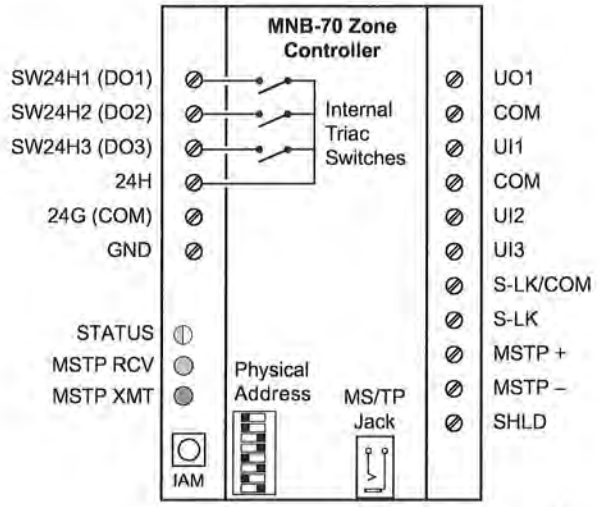

COMMUNICATIONS

BACnet Networks

The MicroNet BACnet Zone Controller incorporates an isolated EIA-485 transceiver for BACnet MS/TP communications at 9.6 up to 76.8 kbaud using standard MS/TP wiring methods. Up to 128 TAC MicroNet BACnet controllers can be connected to an MS/TP sub-net without repeaters.

S-Link

The Sensor Link (S-Link) communications wiring provides power and a communication interface for one MN-Sx TAC I/A Series MicroNet sensor. The various MN-Sx sensors can provide room temperature, room humidity, setpoint adjustment, and occupancy override. This connection uses two-wire, unshielded cable and is not polarity sensitive. Maximum S-Link bus length is 200 ft (61 m).

BACNET COMPLIANCE

BACnet Application Specific Controller (B-ASC).

BACnet is a registered trademark of ASHRAE. ASHRAE does not endorse, approve, or test products for compliance with ASHRAE standards. Compliance of listed products to the requirements of ASHRAE Standard 135 is the responsibility of BACnet International (BI). BTL is a regstered trademark of BI.

Schneider Electric 1354 Clifford Avenue, P.O. Box 2940, Loves Park, IL 61132-2940, USA 1-888-444-1311 www.schneider-electric.com/buildings

© 2012 Schneider Electric. All rights reserved.

ARCHITECTURE

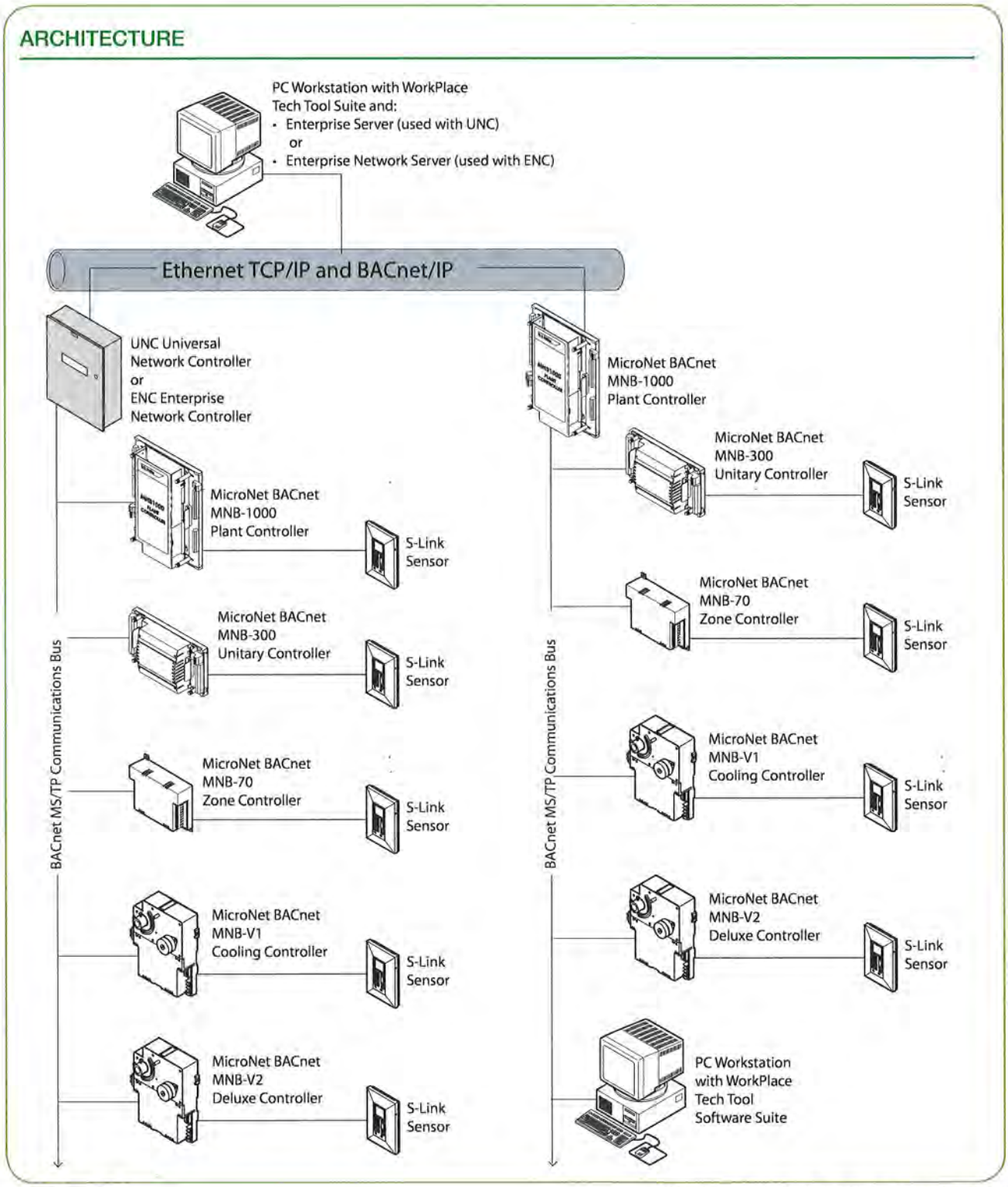

Distributed, manufactured, and sold by Schneider Electric. I/A Series trademarks are owned by Invensys Systems, Inc. and are used on this product under master license from Invensys. Invensys does not manufacture this product or provide any product warranty or support. For service, support, and warranty information, contact Schneider Electric.

All brand names, trademarks and registered trademarks are the property of their respective owners. Information contained within this document is subject to change without notice.

Schneider Electric 1354 Clifford Avenue, P.O. Box 2940, Loves Park, IL 61132-2940, USA 1-888-444-1311 www.schneider-electric.com/buildings

© 2012 Sc' 'er Electric. All rights reserved.

data sheet

JACE® 8000 controller

PRODUCT DEFINITION

The JACE 8000 is a compact, embedded IoT (Internet of Things) controller and server platform for connecting multiple and diverse devices and sub-systems. With Internet connectivity and Web-serving capability, the JACE 8000 controller provides integrated control, supervision, data logging, alarming, scheduling and network management. It streams data and rich graphical displays to a standard Web browser via an Ethernet or wireless LAN, or remotely over the Internet.

The licensing model for the JACE 8000 controller is simplified and features standard drivers along with optional IO and field bus expansion modules for ultimate flexibility and expandability. The JACE 8000 controller operates with Niagara 4, the latest version of the Niagara Framework®, for optimum performance. In larger facilities, multi-building applications and large-scale control system integrations, Niagara 4 Supervisors can be used with JACE 8000 controllers to aggregate information, including real-time data, history and alarms, to create a single, unified application.

HARDWARE SPECIFICATIONS

TI AM3352: 1000MHz ARM® Cortex™-A8

1GB DDR3 SDRAM

Removable micro-SD card with 4GB flash total storage/2GB user storage

Wi-Fi (Client or WAP)
IEEE802.11a/b/g/n
IEEE802.11n HT20 @ 2.4GHz
IEEE802.11n HT20/HT40 @ 5GHz
Configurable radio (Off, WAP, or Client)
WPAPSK/WPA2PSK supported

USB type A connector
Back-up and restore support

(2) isolated RS-485 with selectable bias and termination

(2) 10/100MB Ethernet ports

Secure boot

24VAC/DC power supply

Runs Niagara 4.1 and later

Real time clock

Batteryless

powered by niagara framework®

EXPANSION MODULE AND IO CONFIGURATIONS

MAXIMUM EXPANSION MODULES SUPPORTED	MAXIMUM IO MODULES SUPPORTED
NPB-8000-LON: 4	T-IO-16-485: 16
NPB-8000-232: 4	
NPB-8000-2X-485: 2	

MAXIMUM COMBINATIONS

EXPANSION 1	EXPANSION 2	EXPANSION 3	EXPANSION 4
232 or LON	232 or LON	232 or LON	232 or LON
485 485	232 or LON	232 or LON	232 or LON
485 485	485 485	232 or LON	
485 485	485 485		

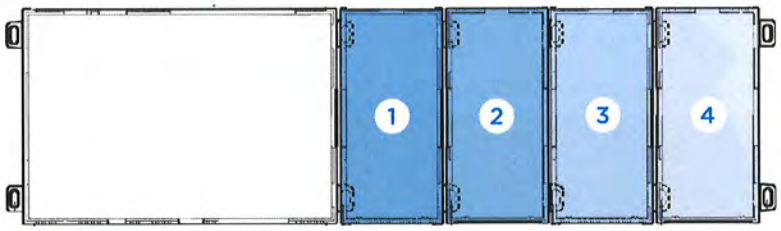

JACE® 8000 CONTROLLER MOUNTING & DIMENSIONS

1. JACE 8000 controller. Allow at least 1.5" (38mm) clearance around all sides and minimum 3" (76mm) at bottom for Wi-Fi antenna
2. Expansion module. Up to four (4) may be used. See "Expansion Module and IO Configurations"
3. Distances between center of tabs from one unit to another unit

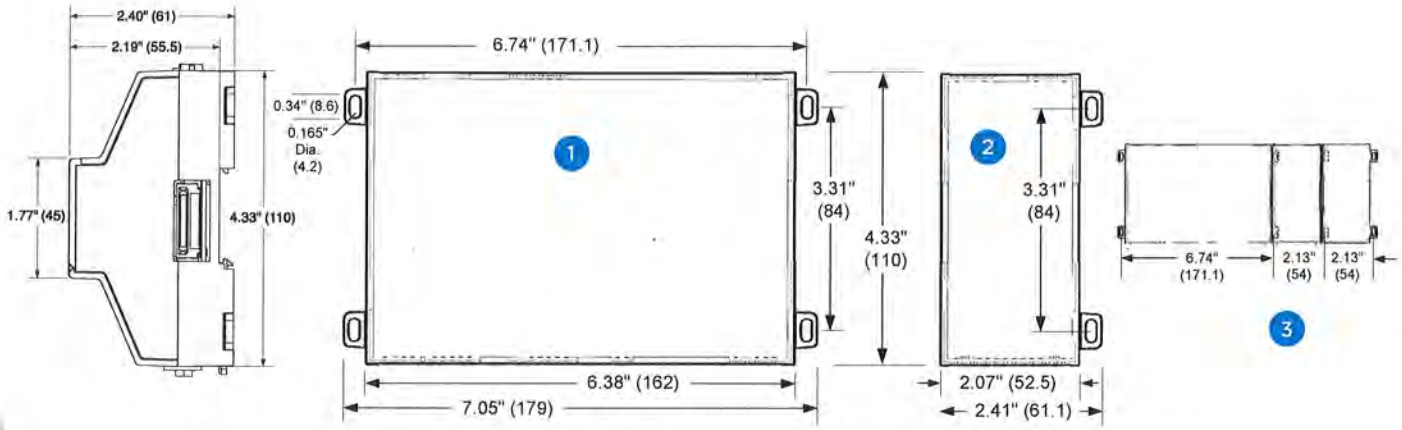

Compatible with (DIN43880) enclosures
Suitable for mounting to a panel or to an EN50022 standard 35mm rail

AGENCY CERTIFICATIONS

- UL 916
- CE EN 61326-1
- FCC Part 15 Subpart B, Class B
- FCC Part 15 Subpart C
- C-UL listed to Canadian Standards Association (CSA) C22.2 No. 205-M1983 "Signal Equipment"
- 1999/5/EC R&TTE Directive
- CCC
- SRRC
- RSS
- ROHS

ENVIRONMENTAL SPECIFICATIONS

- **Operating temperature:** -20–60°C
- **Storage temperature:** -40–85°C
- **Humidity:** 5%–95% — Non condensing
- **Shipping & vibration:** ASTM D4169, Assurance Level II
- **MTTF:** 10 years+

TRIDIUM

ORDERING INFORMATION

Part number	Description
JACE-8000	Base unit includes two isolated RS485 ports, two 10/100MB Ethernet ports, USB Backup & Restore and Wi-Fi connectivity
JACE-8000-DEMO	Base unit includes two isolated RS485 ports, two 10/100MB Ethernet ports, USB Backup & Restore, Wi-Fi connectivity, all available Tridium drivers and a 500 device license. Hardware Accessories purchased separately
NC-8005	Up to 5 devices/250 point core
NC-8010	Up to 10 devices/500 point core
NC-8025	Up to 25 devices/1,250 point core
NC-8100	Up to 100 devices/5,000 point core
NC-8200	Up to 200 devices/10,000 point core
DEVICE-10	Up to 10 devices/500 point upgrade (can be purchased during initial licensing)
DEVICE-25	Up to 25 devices/1,250 point upgrade (can be purchased during initial licensing)
DEVICE-50	Up to 50 devices/2,500 point upgrade (can be purchased during initial licensing)
DEVICE-UP-10	Up to 10 devices/500 point upgrade (can be purchased post initial licensing)
DEVICE-UP-25	Up to 25 devices/1,250 point upgrade (can be purchased post initial licensing)
DEVICE-UP-50	Up to 50 devices/2,500 point upgrade (can be purchased post initial licensing)
JACE-8000-AX	Enables JACE® 8000 controller to run Niagara AX (3.8U). 3.8U Build with JACE 8000 controller support
NPB-8000-2X-485	JACE 8000 controller — add on dual port RS-485 module
NPB-8000-LON	JACE 8000 controller — add on single port LON FTT10A module
NPB-8000-232	JACE 8000 controller — add on single port RS-232 module
WPM-8000	Universal power supply for JACE 8000 controller
T-IO-16-485	Remote IO module, compatible with the JACE 8000 controller. Communication using RS 485, maximum IO supported T-IO-16-485 modules: 16
T-NPB-PWR	24V power supply for T-IO-16-485
T-NPB-PWR-UN	Universal power supply for T-IO-16-485

**All NC-8XXX parts include a Niagara 4 license and Tridium's standard driver suite. Please see Tridium standard driver suite documentation for more details.*

The JACE 8000 controller is available through a wide variety of original equipment manufacturers. Our open distribution business model and open protocol support allow a vendor-neutral application compatible with devices and systems throughout the world.

TRIDIUM 804.747.4771 Corporate HQ / **877.305.1745** Customer Support tridium.com

Copyright © 2015 Tridium Inc. All rights reserved. Intel and Xeon are trademarks of Intel Corporation in the U.S. and/or other countries.

Information and/or specifications published here are current as of the date of publication of this document. Tridium, Inc. reserves the right to change or modify specifications without prior notice. The latest product specifications can be found by contacting our corporate headquarters, Richmond, Virginia. Products or features contained herein may be covered by one or more U.S. or foreign patents. This document may be copied only as expressly authorized by Tridium in writing. It may not otherwise, in whole or in part, be copied, photocopied, reproduced, translated, or reduced to any electronic medium or machine-readable form.

2015-0013

PRODUCT DEFINITION

The Niagara Supervisor is part of the portfolio of Java-based controller/server products, software applications and tools powered by the Niagara Framework®. It provides server-level functions for a network of JACE, Niagara Edge and other field device clients. The Niagara Supervisor serves real-time graphical information to standard web-browser clients and performs other functions like centralized data logging/trending, archiving to external databases, alarming, dashboarding, system navigation, master scheduling, database management and integration with other enterprise software applications through an XML interface (oBIX standard). Also, it provides a comprehensive graphical engineering toolset for application development.

The Niagara Supervisor allows the networking of multiple Niagara-based JACE® and Niagara Edge™ controllers, along with other IP-based controllers and field devices. It enables the design, configuration and maintenance of a unified, real-time controls network.

key features

- Centralized system management
- Quickly navigate to individual buildings using tags to diagnose problems
- Compare data between buildings
- Export system data to external databases
- Integrate BAS to other enterprise applications
- Integrate to other applications, such as work order management, analytics, etc.
- Single tool used to program JACE and Edge controllers and Supervisor
- Remotely back up JACE and Edge applications to Supervisor
- Batch provisioning of JACE and Edge firmware upgrades, security credentials, applications and commissioning options from Supervisor
- Robust built-in analytic capabilities supported by standard Niagara components and visualizations
- Compatibility with Niagara Analytics, adding data source, functional and mathematical programming blocks to enable sophisticated analytic algorithms
- Compatibility with Niagara Enterprise Security access control and security application. Allows integration of BAS and access control to save energy and optimize operations
- Eligible for accreditation under the Federal Risk Management Framework (RMF)
- FIPS 140-2 Level 1 conformance available

powered by niagara framework®

SPECIFICATIONS

HTML5 and Java-enabled user interface (UI); JavaScript data interface library included (BajaScript)

Supports an unlimited number of users over the internet/intranet with a standard web browser (depending on the host PC resources)

Optional enterprise-level data archival using SQL, MySQL or Oracle databases, and HTTP/HTML/XML, CSV or text formats

"Audit Trail" of database changes, database storage and backup, global time functions, calendar, central scheduling, control and energy management routines

Sophisticated alarm processing and routing, including email alarm acknowledging

Access to alarms, logs, graphics, schedules and configuration data with a standard web browser

Niagara follows industry best practices for cyber security, with support for features such as strong, hashed passwords, TLSv1.2 for secure communications and certificate management tools for authentication

HTML-based help system that includes comprehensive online system documentation

Supports multiple Niagara-based stations connected to a local Ethernet network or the internet

Provides online/offline use of the Niagara Framework® Workbench AX graphical configuration tool and a comprehensive Java Object Library

Optional direct Ethernet-based driver support for most Open IP field bus protocols (see supported drivers document)

SOFTWARE & DRIVERS

Every JACE comes with a Niagara 4 software license and many open-protocol IP drivers that cover standard control situations. Other drivers can be purchased separately à la carte. For an up-to-date list of supported drivers, visit the resource library on tridium.com.

SOFTWARE MAINTENANCE

Purchase of a software maintenance agreement (SMA) is required with initial Niagara Supervisor licensing. The initial SMA is for 18 months, with extended agreements of 3 years and 5 years available for discounted rates.

If a Software Maintenance Agreement is not in effect for any period, the price of maintenance for the next period for which it is purchased will be priced at a cost equal to the maintenance fee for the period(s) for which maintenance was not purchased, up to a maximum of 5 years, plus the maintenance fee for the next year.

For an up-to-date list of supported drivers, visit the resource library on tridium.com.

ORDERING INFORMATION

Part number	Description
SUP-0	No Niagara network - Devices only. 18mo SMA required
SUP-0-SMA-INIT	18mo initial SMA required (3YR or 5YR can be substituted)
SUP-1	1 Niagara network connection (18mo SMA req)
SUP-1-SMA-INIT	18mo initial SMA required (3YR or 5YR can be substituted)
SUP-2	2 Niagara network connections (18mo SMA req)
SUP-2-SMA-INIT	18mo initial SMA required (3YR or 5YR can be substituted)
SUP-3	3 Niagara network connections (18mo SMA req)
SUP-3-SMA-INIT	18mo initial SMA required (3YR or 5YR can be substituted)
SUP-10	10 Niagara network connections (18mo SMA req)
SUP-10-SMA-INIT	18mo initial SMA required (3YR or 5YR can be substituted)
SUP-100	100 Niagara network connections (18mo SMA req)
SUP-100-SMA-INIT	18mo initial SMA required (3YR or 5YR can be substituted)
SUP-UNL	Unlimited Niagara network connections (18mo SMA req)
SUP-UNL-SMA-INIT	18mo initial SMA required (3YR or 5YR can be substituted)
SUP-DEMO	Niagara 4 Supervisor demo
SUP-UP-1	Adds one additional Niagara connection to Supervisor
SUP-UP-100	Upgrades small Supervisor to 100 Niagara connections
SUP-UP-UNL	Upgrades Supervisor 100 to unlimited Niagara connections
SUP-DEVICE-10	10 device upgrade (standard drivers included)
SUP-DEVICE-25	25 device upgrade (standard drivers included)
SUP-DEVICE-50	50 device upgrade (standard drivers included)
SUP-DEVICE-100	100 device upgrade (standard drivers included)
SUP-DEVICE-200	200 device upgrade (standard drivers included)
SUP-DEVICE-500	500 device upgrade (standard drivers included)
SUP-DEVICE-1000	1000 device upgrade (standard drivers included)
SP-S-FIPS	Provides FIPS 140-2 Level 1 conformance for 4.6 and later
SUP-AX	Enables Supervisor to run Niagara AX (v3.8)
SUP-[0-UNL]-SMA-[1,3,5]YR	Supervisor [0-UNL] Maintenance - [1,3,5] YR extensions

COMPATIBILITY

In any given Niagara system, the Niagara Supervisor must be running the highest version of any Niagara instance in the architecture.

When connecting to JACEs that are running older versions of Niagara, these compatibility guidelines apply:

- **Niagara AX:** Niagara 4 Supervisors can connect to JACEs running Niagara AX versions 3.6u4, 3.7u1, 3.8R and higher.
- **R2:** Niagara AX and Niagara 4 Supervisors can connect to JACEs running R2 through the oBIX XML interface only. oBIX is included in all Niagara AX and Niagara 4 Supervisors as a means of integrating Niagara-based Release 2 (R2) JACEs. With Niagara Release 2.3.522 or higher, the oBIX driver can be added to expose all data points, schedules, trends and alarms to a Niagara AX or Niagara 4 system. This oBIX driver is both a client and a server.

PLATFORM REQUIREMENTS FOR NIAGARA SUPERVISOR

Niagara 4 Supervisors may run acceptably on lower-rated platforms, or may even require more powerful platforms, depending on the application, number of data points integrated, data poll rate, number of concurrent users, performance expectations, etc.

- **Processor:** Intel® Xeon® CPU E5-2640 x64 (or better), compatible with dual- and quad-core processors
- **Operating System:** Windows 7 Professional/Enterprise/Ultimate (32 and 64 bit), Windows 8.1 Professional/Enterprise/Ultimate (32 and 64 bit)Windows 10 (32 and 64 bit), Windows Server 2012 R2 (SP2) Standard/Enterprise, Windows Server 2016, Red Hat Enterprise Linux 7.4
- **Memory:** 6 GB minimum, 8 GB or more recommended for larger systems
- **Hard Drive:** 4 GB minimum, more recommended depending on archiving requirements
- **Display:** Video card and monitor capable of displaying 1024 x 768 pixel resolution or greater
- **Network Support:** Ethernet adapter (10/100 Mb with RJ-45 connector)
- **Connectivity:** Full-time high-speed ISP connection recommended for remote site access (i.e., T1, ADSL, cable modem) and IPv6 compliant

Platform requirements for older versions of Niagara Supervisors are included in the release notes for each particular version.

TRIDIUM

tridium.com

Locations and customer support, worldwide

Headquarters
North America
1 804 747 4771

Support
North America & Latin America
1 877 305 1745

Europe, Middle East & Africa
44 1403 740290

Asia Pacific
8610 5669 7148

© 2018 Tridium Inc. All rights reserved. All other trademarks and registered trademarks are properties of their respective owners.

Information and/or specifications published here are current as of the date of publication of this document. Tridium, Inc. reserves the right to change or modify specifications without prior notice. The latest product specifications can be found by contacting our corporate headquarters, Richmond, Virginia. Products or features contained herein may be covered by one or more U.S. or foreign patents. This document may be copied only as expressly authorized by Tridium in writing. It may not otherwise, in whole or in part, be copied, photocopied, reproduced, translated, or reduced to any electronic medium or machine-readable form.

2018-0018

SYSTEM-10
BTU METER

Chilled Water • Hot Water • Condenser Water

ONICON's System-10 BTU meter is the premier platform for accurately measuring and reporting the thermal energy usage, flows and temperatures required by today's High Performance Buildings. Whether it's used for chiller plant optimization, CEP monitoring and control or sub-metering the hydronic energy use across a campus, the System-10 has the versatility and functionality required to integrate seamlessly with your BMS/EMS.

ONICON
Flow and Energy Measurement

• SYSTEM-10 BTU METER •

UL LISTED
PROCESS CONTROL EQUIPMENT
3GF5

DESCRIPTION

The System-10 BTU Meter provides highly accurate thermal energy measurement in chilled water, hot water and condenser water systems based on signal inputs from two matched temperature sensors (included) and any of ONICON's insertion or inline flow meters (ordered separately). The basic model provides a local indication of energy, flow and temperature data through an alphanumeric display. An isolated solid state dry contact is provided for energy total. Optional analog outputs and network communications are also available.

APPLICATIONS

Chilled water, hot water and condenser water systems for:

- Commercial office tenant billing
- Central plant monitoring
- University campus monitoring
- Institutional energy cost allocation
- Performance/efficiency evaluations
- Performance contracting energy monitoring

CALIBRATION

Flow meters and temperature sensors are individually calibrated followed by a complete system calibration. Field commissioning is also available.

* National Institute of Standards and Technology

FEATURES

Simple Installation and Commissioning - Factory programmed and ready for use upon delivery. All process data and programming functions are accessible via front panel display and keypad.

Single Source Responsibility - One manufacturer is responsible for every aspect of the energy measurement process ensuring component compatibility and overall system accuracy.

NIST* Traceable Calibration with Certification - Each BTU measurement system is individually calibrated using application specific flow and temperature data and is provided with calibration certificates.

Precision Solid State Temperature Sensors - Custom calibrated and matched to an accuracy better than ±0.15°F over calibrated range.

Highly Accurate Flow Meters - ONICON offers a wide variety of insertion and inline type flow measurement technologies including turbine, electromagnetic and vortex sensing. Each type offers unique advantages depending on the application. All ONICON flow meters are individually wet calibrated and designed to operate over a wide flow velocity range with accuracies ranging from ±0.2% to ±2.0% of rate depending on the model.

Complete Installation Package - All mechanical installation hardware, color coded interconnecting cabling and installation instructions are provided to ensure error-free installation and accurate system performance.

Serial Communications - Optional communications card provides complete energy, flow and temperature data to the control system through a single network connection, reducing installation costs.

Smart button technology simplifies menu page navigation

11451 Belcher Road South, Largo, FL 33773 • USA • Tel +1 (727) 447-6140 • Fax +1 (727) 442-5699
www.onicon.com • sales@onicon.com

SYSTEM-10 BTU METER SPECIFICATIONS

ACCURACY

TEMPERATURE

Overall differential temperature measurement uncertainty of ≤ ± 0.15°F over the stated range
(Includes uncertainty associated with the sensors, transmitters, cabling and calculator input circuitry)

Temperature sensors meet EN1434 / CSA C900.1 accuracy requirements for 1K sensors for cooling applications, 32 to 77°F

Temperature sensors meet EN1434 / CSA C900.1 accuracy requirements for 2K sensors for heating applications, 140 to 212°F

CALCULATOR

Computing nonlinearity within ±0.05%

Calculator meets EN1434 / CSA C900.1 class 1 accuracy requirements for 2K sensors for all applications

PROGRAMMING

Factory programmed for specific application

Field programmable via front panel interface

MEMORY

Non-volatile EEPROM memory retains all program parameters and totalized values in the event of power loss.

DISPLAY

Alphanumeric LCD displays total energy, total flow, energy rate, flow rate, supply temperature, return temperature, serial number and alarm status

Alpha: 16 character, 0.2” high

Numeric: 8 digit, 0.4” high

Rate Display Range: 0 - 9,999,999

Total Display Range: 0 - 9,999,999

The totals will roll over to zero when the maximum count is exceeded.

OUTPUT SIGNALS

Standard:

Isolated solid state dry contact for energy total:

Contact rating: 100 mA, 50 V

Contact duration: 0.5, 1, 2, or 6 sec

Optional:

Analog Output(s) (4-20 mA, 0-10 V or 0-5 V):

One or four analog output(s) available for flow rate, energy rate, supply/return temps, or delta-T.

Serial Communications:

BACnet IP or MS/TP	LONWORKS - TP/FT-10F
Siemens Apogee - P1	Johnson Controls Metasys - N2
MODBUS RTU RS485 or TCP/IP	

TEMPERATURE SENSORS

Solid state sensors are custom calibrated using NIST traceable temperature standards.

Current based signal (mA) is unaffected by wire length.

TEMPERATURE RANGE

Standard liquid temperature range: 32 to 200°F

Optional extended temperature ranges available

Ambient temperature range: -20 to 140°F

LIQUID FLOW SIGNAL INPUT

0-15 V pulse output from any ONICON flow meter

MECHANICAL

Electronics Enclosure:

Standard: Steel NEMA 13, wall mount, 8”x10”x4”

Optional: NEMA 4 (Not UL listed)

Approximate weight: 12 lbs

Temperature Sensor Thermowell Kits:

Thermowells and other kit components vary by fluid type, fluid temperature, pipe material and pipe size. Commonly used kits are listed on the previous page. Contact ONICON for additional thermowell kit options, including Hot Tap Installation Kits for retrofit installations.

ELECTRICAL

Input Power: Based on BTU meters configured for network connection without the optional analog outputs

Standard: 24 VAC, 50/60 Hz, 500 mA

Optional: 120 VAC, 50/60 Hz, 200 mA
230 VAC, 50 Hz, 150 mA

Internal Supply:

Provides 24 VDC at 200 mA to electronics and flow meter

Wiring:

Temperature signals: Use 18-22 ga twisted shielded pair

Flow signals: Use 18-22 ga - see flow meter specification sheet for number of conductors.

Note: Specifications are subject to change without notice.

TYPICAL SYSTEM-10 INSTALLATION

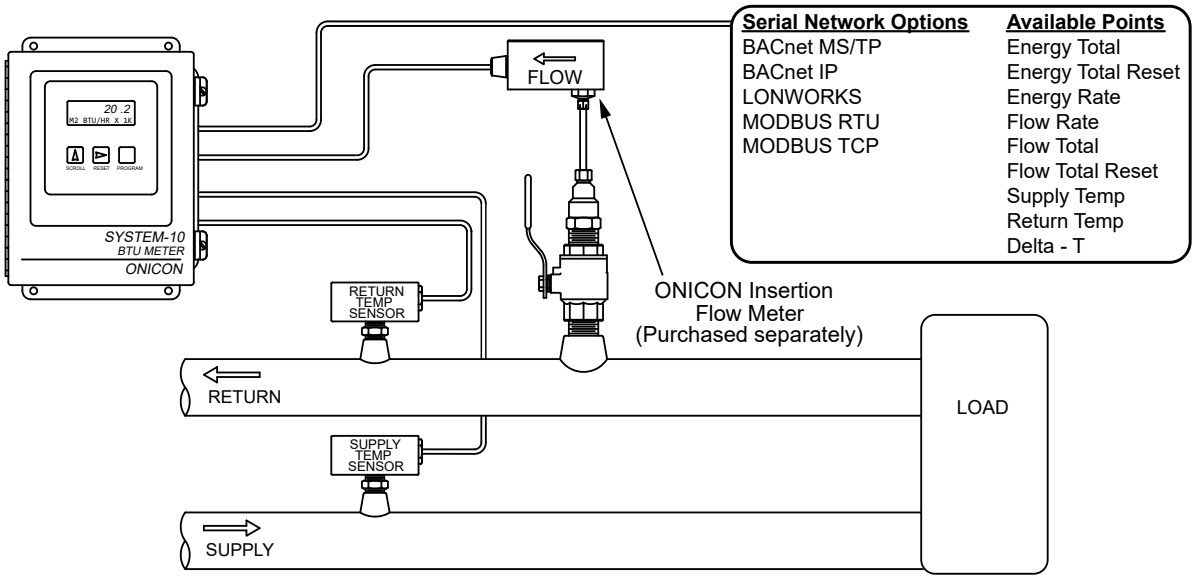

COMPATIBLE FLOW METERS

AVAILABLE OUTPUTS

METER ORDERING INFORMATION

Meter Model Number Coding = SYS-10-ABCD-EFGG

A = Electronics Enclosure

1 = NEMA 13 enclosure with LCD display

2 = NEMA 4 enclosure with LCD display

BB = Input Power

1 = 24 VAC, 12 VA

2 = 120 VAC, 15 VA

3 = 240 VAC, 17.5 VA

C = Serial Communications

0 = No serial communications provided

1 = RS485, BACnet MS/TP

2 = RS485, MODBUS RTU

3 = BACnet IP

4 = MODBUS TCP/IP

5 = DualNet serial communications, IP and RS485

8 = LonWorks

D = Analog Output

0 = No analog output

1 = Single (1) isolated analog output

2 = Four (4) isolated analog outputs

E= Auxiliary Pulse Inputs

0 = (1) Directional pulse input only

1 = (1) Directional pulse and auxiliary pulse input

F= Auxiliary Pulse Outputs

1 = Three (3) pulse outputs, dry contact

GG= Temperature Sensor

01 = Matched pair of current(mA) based sensors, CHW range

02 = Matched pair of current(mA) based sensors, HHW range

S1 = Scaled RTD pair, 122 to 302° F range

S2 = Scaled RTD pair, 32 to 302° F range

11451 Belcher Road South, Largo, FL 33773 • USA • Tel +1 (727) 447-6140 • Fax +1 (727) 442-5699
www.onicon.com • sales@onicon.com

F-1000 Series
Turbine Flow Meters

Chilled Water • Hot Water • Domestic Water

ONICON's F-1000 Series is a family of insertion and inline turbine flow meters that provide accurate measurement over a wide flow range in pipe sizes ranging from ¾" to 72" in diameter. They are an excellent value when measuring water flow in clean closed loop systems.

ONICON
Flow and Energy Measurement

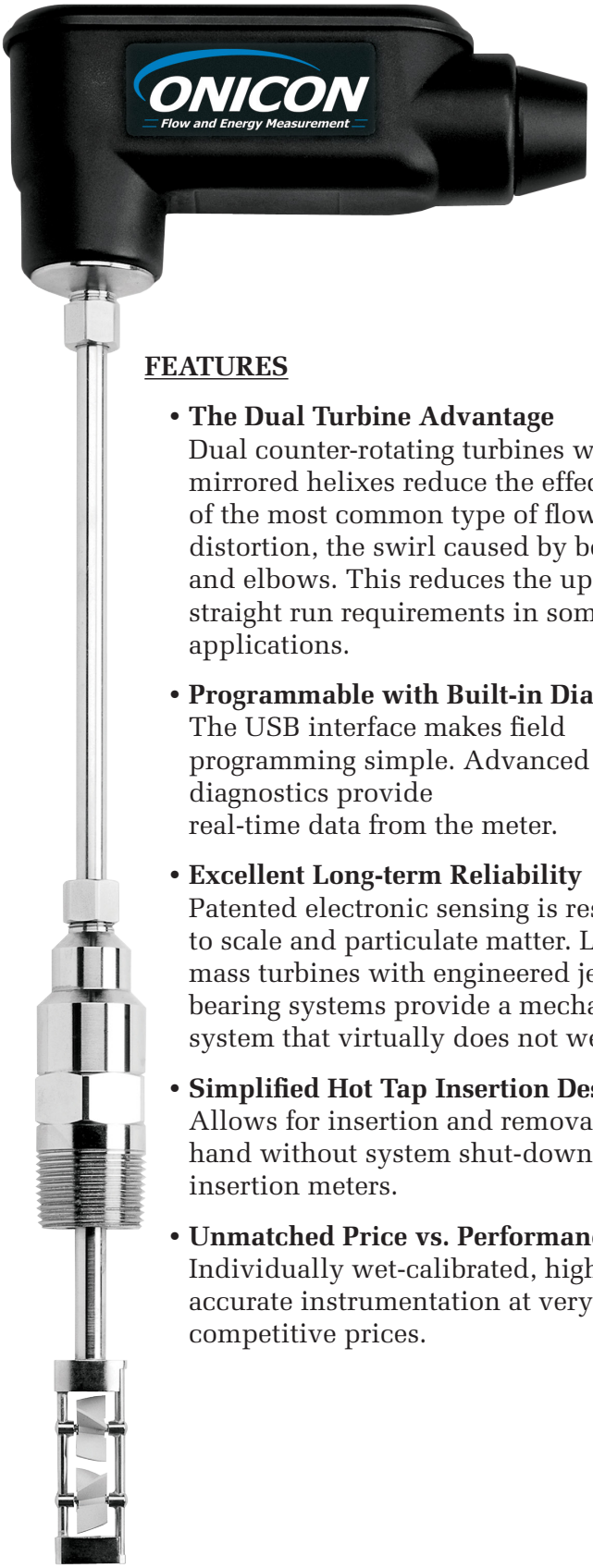

FEATURES

- **The Dual Turbine Advantage**
  Dual counter-rotating turbines with mirrored helixes reduce the effects of the most common type of flow distortion, the swirl caused by bends and elbows. This reduces the upstream straight run requirements in some applications.
- **Programmable with Built-in Diagnostics**
  The USB interface makes field programming simple. Advanced diagnostics provide real-time data from the meter.
- **Excellent Long-term Reliability**
  Patented electronic sensing is resistant to scale and particulate matter. Low mass turbines with engineered jewel bearing systems provide a mechanical system that virtually does not wear.
- **Simplified Hot Tap Insertion Design**
  Allows for insertion and removal by hand without system shut-down for insertion meters.
- **Unmatched Price vs. Performance**
  Individually wet-calibrated, highly accurate instrumentation at very competitive prices.

DESCRIPTION

ONICON's F-1000 Series is a family of insertion and inline style turbine meters flow meters that provide accurate, reliable flow measurement in a variety of applications. The F-1000 Series meters are suitable for use in pipes ranging in size from ¾ to 72" in diameter. Each model utilizes ONICON's patented electronic turbine rotation sensing system and unique low mass turbine design that is accurate over wide flow ranges with excellent low flow measurement capability.

THREE DIFFERENT STYLES

- F-1100 single turbine insertion meters
  Suitable for use in 1¼ - 72" pipes
- F-1200 dual turbine insertion meters
  Suitable for use in 2½ - 72" pipes
- F-11XX single turbine inline meters
  Available as ¾ and 1" meters.

APPLICATIONS

- Chilled water or hot water & water/glycol solutions for HVAC
- Domestic/municipal water
- Clean process water

CALIBRATION

Every F-1000 series meter is wet-calibrated using N.I.S.T.[1] traceable standards. A certificate of calibration is provided with each meter.

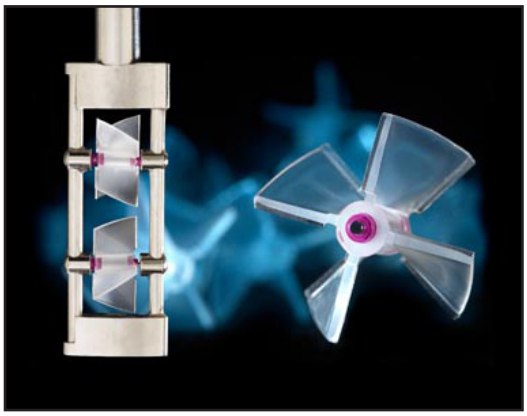

Axially mounted turbines riding on sapphire bearings virtually eliminate the mechanical load on the tungsten carbide shaft on which they ride.

[1] - National Institute of Standards and Technology

11451 Belcher Road South, Largo, FL 33773 • USA • Tel +1 (727) 447-6140 • Fax +1 (727) 442-5699
www.onicon.com • sales@onicon.com

THREE DIFFERENT OUTPUT VERSIONS

Frequency & Scaled Pulse/Alarm Outputs
This version provides a high-resolution frequency output and a scaled pulse output for totalizing flow. The frequency output allows for connection to ONICON Btu meters or displays. The scaled pulse output may also be configured as an alarm.

Frequency, Analog & Scaled Pulse/Alarm Outputs
This version provides a high-resolution frequency output, an analog output for flow rate and a scaled pulse output for totalizing flow. The frequency output allows for connection to ONICON Btu meters or displays. The scaled pulse output may also be configured as an alarm.

Frequency, Isolated Analog & Scaled Pulse/Alarm Outputs
This version provides a high-resolution frequency output, an isolated analog output for flow rate and a scaled pulse output for totalizing flow. The frequency output allows for connection to ONICON Btu meters or displays. The scaled pulse output may also be configured as an alarm.

OPERATING RANGE FOR COMMON PIPE SIZES
0.17 TO 20 ft/s
±2% accuracy begins at 0.4 ft/s

Pipe Size (Inches)	Flow Rate (GPM)
¾	0.4 - 38
1	0.4 - 38
1 ¼	0.8 - 95
1 ½	1 - 130
2	2 - 210
2½	2.5 - 230
3	4 - 460
4	8 - 800
6	15 - 1,800
8	26 - 3,100
10	42 - 4,900
12	60 - 7,050
14	72 - 8,600
16	98 - 11,400
18	120 - 14,600
20	150 - 18,100
24	230 - 26,500
30	360 - 41,900
36	510 - 60,900

Utility software available allows for programming and field diagnostics.

Inline meters are provided with meter couplings. Couplings are available with NPT or copper sweat process connections.

11451 Belcher Road South, Largo, FL 33773 • USA • Tel +1 (727) 447-6140 • Fax +1 (727) 442-5699
www.onicon.com • sales@onicon.com

GENERAL SPECIFICATIONS

ACCURACY
± 0.5% of reading at calibrated velocity
Insertion: ± 1% of reading from 3 to 30 ft/s (10:1 range)
± 2% of reading from 0.4 to 20 ft/s (50:1 range)
Inline: ± 2% of reading from 0.8 to 38 GPM (50:1 range)

SENSING METHOD
Electronic impedance sensing (non-magnetic and non-photoelectric)

PIPE SIZE RANGE
Insertion: 1¼ through 72" nominal diameter
Inline: Threaded or sweat union fittings - ¾ or 1"

SUPPLY VOLTAGE
24 ±4 V AC/DC at 100 mA

LIQUID TEMPERATURE RANGE
Medium Temp: 150° F continuous, 200° F peak
High Temp: 280° F continuous, 300° F peak
Meters operating above 250° F require 316 SS construction option

AMBIENT TEMPERATURE RANGE
-5° to 160° F (-20° to 70° C)

OPERATING PRESSURE
400 PSI maximum

PRESSURE DROP
Insertion: Less than 1 PSI at 20 ft/s in 1½" pipe, decreasing in larger pipes and lower velocities
Inline: 3 PSI at maximum flow rate

MATERIAL
Wetted material:
Electroless nickel plated brass stem
Optional: 316 stainless steel [1]
Optional: NSF/ANSI 61/372 version* [1]

OUTPUT SIGNALS AVAILABLE
Frequency Output
0-15 V peak pulse, programmable max Hz
Scaled Pulse / Alarm Output
Isolated solid state dry contact
Contact rating: 100 mA, 50 V
Contact duration: Field programmable; 50, 100, 500 or 1000 ms
Analog Output (non-isolated)
Signal type: 4-20 mA, 0-10 V or 0-5 V (jumper selectable)
Output range: Field programmable
Isolated Analog Output
Signal type: 4-20 mA, 0-10 V or 0-5 V (jumper selectable)
Output range: Field programmable

ELECTRONICS ENCLOSURE
NEMA4 enclosure
Optional: Submersible enclosure

ELECTRICAL CONNECTIONS
Standard: 10' of cable with ½" NPT conduit connection
Optional: Indoor DIN connector with 10' of plenum rated cable

[1] Insertion meters only

* CLASSIFIED c UL us WATER QUALITY
TURBINE INSERTION FLOW METER
NSF/ANSI 61 <MH60590>
ALSO CLASSIFIED IN ACCORDANCE WITH
NSF/ANSI 372

METER ORDERING INFORMATION

Meter Model Number Coding = F-1ABB-CC-DD-EFGH

A = Number of Turbines

1 = Single Turbine

2 = Dual Turbine

BB = Meter Type

00 = Insertion

34 = ¾" Inline

01 = 1" Inline

CC = Outputs

00 = Freq. and Scaled Pulse

10 = Freq., analog and Scaled Pulse

11 = Freq., Iso. Analog, and Scaled Pulse

DD = Meter Type and Pipe Size Range

A1 = 1.25 - 2.5" (F-1100 Only)
B2 = 2.5 – 4.0" (F-1100 Only)
C3 = 2.5 - 10"
D4 = 2.5 - 16"
E5 = 2.5 - 22"
F6 = 2.5 - 72"
00 = Inline

E= Wetted Materials

1 = Electroless Ni Plated Brass

2 = 316 SS

3 = Bronze Body, Inline

F= Electronics Enclosure

2 = NEMA 4 Weathertight Enclosure

3 = NEMA 6 Submersible Enclosure

G= Wiring Connection

2 = 10' PVC Jacketed Cable, Pig Tail with ½" Conduit Adapter

5 = 10' Plenum Rated Cable, DIN Connector

6 = 25' PVC Jacketed Cable, Pig Tail with ½" Conduit Adapter

7 = 10' Submersible Cable with Connector

H = Process Adapter

1 = 1" NPT Adapter, Medium Temperature (Temp. </= 150° F)

2 = 1" NPT Adapter, High Temperature (Temp. </= 280° F)

3 = 1" NPT Adapter, NSF Rated for Domestic Water

9 = Inline, coupling adapters based on pipe material

6" Steam Meter

Vortex
Flow Meters

VN2000 Flow Meters

Hot Tap Insertion Meter

DESCRIPTION

The VN2000 Hot Tap Insertion Vortex Flow Meter measures the volumetric flow, mass flow rate or BTU/energy of steam, gas or liquids over a large flow range. The meter is a heavy duty design engineered to stand up to the most abusive environments inside and outside the pipe.

The vortex sensing element is CNC machined out of one piece of solid stainless steel. The dual ceramic piezoelectric sensors are bonded inside the vortex element, which is press-fit to the stainless steel insertion bar and completely welded together. There are no internal O-rings or seals of any kind and absolutely no leak paths into the sensors or electronics. Our sensors do not touch the process fluid, which gives them an almost unlimited life span.

BENEFITS

- Measure volumetric or mass flow rate of steam, gas or liquids
- Standardize on an insertion bar that can measure line sizes 2…36 in.
- Reduced noise interference with dual piezoelectric sensors and filtering
- Machined safety stop provides constant seal, will not leak
- Standard model handles process temperatures up to 400° F (204° C)
- Reduced maintenance due to:
  - ◊ No moving parts
  - ◊ Heavy duty welded stainless steel construction
  - ◊ Piezoelectric and temperature sensors never touch process fluid
  - ◊ No recalibration necessary
  - ◊ No pins or screws to corrode and rust

OPERATION

An everyday example of a vortex shedding phenomenon is a flag waving in the breeze: the flag waves due to the vortices shed by air moving across the flagpole. Within the flow meter, as flowing fluid moves across the tiny strut or "shedder bar", vortices are shed on a smaller scale. The frequency of the vortices shedding is proportional to the fluid velocity.

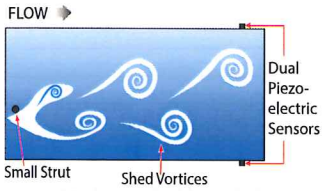

Through the use of an internal RTD, the flow meter software compensates for changes in temperature to achieve an accurate mass flow measurement.

With the addition of a second external RTD, the meter can measure the energy transfer across a heat exchanger.

APPLICATIONS

The unique design of the VN2000 meter can be used in steam, gas or liquid lines. The same design can measure water as low as 1.32 feet per second and saturated steam in excess of 250 feet per second.

INSTALLATION

Each meter has a seal assembly that rides along the shaft of the insertion bar. This stainless steel seal assembly has a 1-1/2 in. NPT or flange connection for easy connect and disconnect with any valve or Threadolet®.

The VN2000 meter can be installed or removed during high pressure applications using our optional insertion tool. Once the meter is installed into the flow, simply point the machined arrow at the top of the insertion bar downstream for an accurate and repeatable flow reading.

SIZING SOFTWARE

The VN2000 Meter Sizing Application software determines the precise scaling factor for your application based on:

- Fluid type
- Minimum and maximum operating flow rate
- Operating temperature
- Operating pressure

Badger Meter

VRX-DS-02211-EN-04 (April 2018)

Product Data Sheet

SPECIFICATIONS

	Uncertainty	
	Volumetric Flow	**Repeatability**
Liquids	±1.0% of reading	±0.25% of reading
Steam	±1.0% of reading	±0.25% of reading
Gas	±1.0% of reading	±0.25% of reading
	Mass or Heat Flow	**Repeatability**
Liquids	±1.0% of reading	±0.25% of reading
Steam	±1.0% of reading	±0.25% of reading
Gas	±1.0% of reading	±0.25% of reading
Velocity – Liquid	1.32…32 ft/s (0.402…9 m/s)	
Velocity – Gas	cube root (140/ρ) ft/s… 300 ft/sec (91 m/sec)	
Reynolds Range	10,000…7,000,000 depending on fluid density	
Straight Run Pipe	Upstream 10 diameters; downstream 5 diameters with one 90° elbow before the meter	
Pipe sizes	2…36 in. (50…900 mm)	
Fluid temperature	–250…400° F (–120…204°C)	
Maximum Pressure	1000 psi (68.9 bar)	
Wetted Materials	Stainless steel 304L	
Hot Tap Connections	1-1/2 in: NPT, ASME/ANSI 150, 300 flanges Sealing assembly: Two ethylene propylene O-rings Optional removable extractor	

Measurement Options	**Sensors**			
Volumetric flow rate	Dual piezo vortex sensors			
Mass flow rate based on velocity and temperature	Dual piezo vortex sensors RTD embedded in sensor: 100 Ohm, 3 wire			
BTU/Energy	Dual piezo vortex sensors RTD embedded in sensor: 100 Ohm, 3 wire External 100 Ohm RTD input			
Units of measure	**Steam**	**Gases**	**Liquids**	**Energy (Any Fluid)**
	Pounds	Pounds	Pounds	BTU
	Kilograms	Kilograms	Kilograms	
	Tons	Tons	Tons	
	Metric Tons	Metric Tons	Metric Tons	
	Cubic Feet	Cubic Feet	Cubic Feet	
	Cubic Meters	Actual Cubic Feet	Cubic Meters	
	Gallons	Natural Cubic Meters	Gallons	
	Liters	Actual Cubic Meters	Liters	
		U.S. Gallons		
		Natural Liters		
		Actual Liters		
	Units of measure are used for flow rate, mass flow rate, heat/energy flow rate; volume total, mass total, heat/energy total			
Measurement interval	Second, minute, hour, day			

Transmitter

Display	2×16 characters reflective display Rotatable display Flow rate: 6 digits with decimal Totalizer
Keypad	4 membrane buttons
Power	14…36 V DC; loop powered with 4…20 mA option
Operating Temperature	32…140° F (0… 60° C) 5…95% relative humidity non-condensing
Output	One 4…20 mA, 10…36V max load, 24-bit resolution Adjust the 4 mA and 20 mA signal from the keypad and zero out any anomalies found between the meter and the monitoring device
Digital Output	One min. input resistance 1000 Ohm Max output frequency = 12.5 Hz Opto isolator 5…24V DC
Communication	EIA-485 with Modbus RTU (9600, 14400, 19200 baud) or BACnet MS/TP (9600, 19200, 38400, 76800 baud)
Enclosure	General purpose
Mounting	Integral meter or remote pipe and wall; Up to 30 ft (10 m) from pipe
Cable	Cable jacket material: polyurethane (gray) Operating temperature –13…185° F (–25…85° C)

FLOW RATE TABLES

Saturated Steam Minimum…Maximum Flow Rates in lb/hr

Pipe Line Size in.	Pressure (psig); Density (lb/ft³)						
	5 psig 0.0486 lb/ft³	50 psig 0.1503 lb/ft³	100 psig 0.2577 lb/ft³	150 psig 0.3614 lb/ft³	200 psig 0.4688 lb/ft³	300 psig 0.6481 lb/ft³	400 psig 0.8613 lb/ft³
2	58.38…1019	124.0…3152	177.7…5404	222.7…7580	264.9…9832	328.7…13592	397.4…18064
3	128.6…2244	273.2…6945	391…11905	490.5…16698	583.5…21662	724.2…29944	875.5…39797
4	221.5…3865	470.5…11959	674.0…20501	844.7…28755	1005…37302	1247…51565	1508…68531
5	348.1…6074	739.4…18794	1057…32218	1327…45188	1579…58620	1960…81035	2369…107697
6	502.6…8771	1068…27140	1530…46525	1917…65256	2280…84653	2830…117021	3421…155525
8	870.4…15188	1849…46997	2649…80564	3319…112999	3949…146586	4900…202637	5924…269310
10	1372…23939	2914…74078	4175…126988	5232…178113	6224…231055	7724…319403	9338…424496
12	1947…33981	4137…105152	5927…180256	7427…252827	8835…327976	10964…453385	13255…602561
14	2354…41075	5000…127102	7164…217884	8977…305604	10679…396440	13253…548028	16022…728344
16	3075…53649	6531…166010	9357…284583	11725…399157	13948…517799	17310…715791	20927…951306
18	3892…67907	8267…210132	11843…360218	14842…505242	17655…655418	21911…906031	26489…1204139
20	4836…84381	10273…261109	14717…447606	18442…627814	21938…814421	27227…1125833	32915…1496262
22	6170…107670	13108…333173	18778…571142	23532…801085	27993…1039195	34741…1436554	41999…1909218
24	6994…122044	14858…377651	21285…647389	26674…908029	31730…1177925	39379…1628331	47606…2164096
26	8712…152020	18507…470408	26513…806397	33225…1131054	39523…1467242	49051…2028274	59299…2695631
28	10147…177056	21555…547880	30880…939203	38697…1317327	46032…1708882	57129…2362310	69064…3139574
30	11691…203999	24835…631254	35579…1082126	44586…1517793	53037…1968932	65823…2721797	79574…3617341
32	12815…223615	27223…691952	39000…1186179	48873…1663737	58137…2158256	72152…2983512	87226…3965167
36	16264…286802	34550…878194	49497…1505443	62027…2111538	73785…2739159	91572…3786537	110703…5032408

Saturated Steam Minimum…Maximum Flow Rates in kg/hr

Pipe Line Size mm	Pressure (bar); Density (kg/m³)						
	0.4 bar 0.7779 kg/m³	3.4 bar 2.372 kg/m³	6.9 bar 4.127 kg/m³	11 bar 6.125 kg/m³	13.8 bar 7.508 kg/m³	20.7 bar 10.38 kg/m³	27 bar 13.79 kg/m³
50	26.48…462.0	55.70…1409	80.58…2451	104.9…3637	120.1…4459	149.1…6164	180.2…8192
75	58.33…1018	122.7…3104	177.5…5399	231.0…8013	264.8…9824	328.4…13580	397.0…18048
100	100.4…1753	211.3…5345	305.7…9297	397.8…13799	455.7…16917	565.5…23385	683.7…31080
125	157.9…2754	332.1…8400	480.4…14611	625.1…21685	716.1…26585	888.8…36750	1074…48842
150	228.0…3978	479.5…12130	693.7…21100	902.7…31315	1034…38391	1283…53071	1552…70533
200	394.7…6888	830.4…21004	1201…36537	1563…54226	1791…66479	2222…91899	2687…122136
250	622.2…10857	1309…33108	1894…57591	2464…85472	2823…104787	3503…144854	4235…192515
300	883.2…15411	1858…46996	2688…81749	3498…121326	4007…148742	4973…205617	6011…273270
350	1068…18628	2246…56806	3249…98813	4228…146652	4843…179791	6011…248539	7266…330315
400	1394…24330	2933…74195	4243…129063	5522…191546	6326…234830	7851…324622	9491…431431
450	1765…30797	3713…93914	5371…163364	6989…242454	8007…297242	9937…410898	12013…546095
500	2193…38268	4614…116698	6674…202996	8685…301273	9949…369352	12348…510582	14927…678577
550	2798…48830	5887…148906	8516…259021	11082…384421	12695…471290	15756…651498	19047…865859
600	3172…55349	6673…168784	9653…293600	12561…435741	14390…534207	17859…738472	21590…981449
650	3951…68943	8312…210240	12024…365713	15647…542766	17924…665416	22245…919852	26893…1222508
700	4602…80297	9681…244865	14004…425942	18224…632154	20876…775003	25909…1071343	31322…1423943
750	5302…92517	11154…282127	16135…490760	20997…728352	24053…892940	29852…1234375	36088…1640517
800	5812…101413	12226…309255	17687…537949	23016…798387	26366…978801	32722…1353067	39558…1798262
900	7376…128708	15517…392493	22448…682741	29211…1013276	33462…1242249	41529…1717250	50205…2282271

Liquid Minimum...Maximum Flow Rates in US Gal/min*

Pipe Line Size in.	Density 62.3 lb/ft³
2	13.80...313.7 gpm
3	30.41...691.2 gpm
4	52.37...1190 gpm
5	82.3...1871 gpm
6	118.9...2701 gpm
8	205.8...4678 gpm
10	324.4...7373 gpm
12	460.5...10466 gpm
14	556.6...12650 gpm
16	727.0...16523 gpm
18	920.2...20914 gpm
20	1143...25988 gpm
22	1459...33160 gpm
24	1654...37587 gpm
26	2060...46819 gpm
28	2399...54530 gpm
30	2764...62828 gpm
32	3030...68869 gpm
34	3439...78158 gpm
36	3846...87406 gpm

* Standard conditions of 70° F (21.11° C)

Liquid Minimum...Maximum Flow Rates in Liter/min*

Pipe Line Size in.	Density 997.77 kg/m³
50	52.26...1188 lpm
80	115.1...2616 lpm
100	198.2...4506 lpm
125	311.5...7018 lpm
150	449.9...10225 lpm
200	779.1...17706 lpm
250	1228...27909 lpm
300	1743...39616 lpm
350	2107...47885 lpm
400	2752...62544 lpm
450	3483...79167 lpm
500	4328...98373 lpm
550	5523...125523 lpm
600	6260...142280 lpm
650	7798...177226 lpm
700	9082...206413 lpm
750	10464...237825 lpm
800	11470...260693 lpm
850	13018...295855 lpm
900	14558...330859 lpm

* Standard conditions of 70° F (21.11° C)

Air Minimum…Maximum Flow Rates in ft³/min (SCFM [1])

Pipe Line Size in.	Pressure (psig); Density (lb/ft³)								
	0 psig 0.075 lb/ft³	50 psig 0.3312 lb/ft³	100 psig 0.5871 lb/ft³	150 psig 0.843 lb/ft³	200 psig 1.0998 lb/ft³	300 psig 1.611 lb/ft³	400 psig 2.123 lb/ft³	500 psig 2.635 lb/ft³	1000 psig 5.194 lb/ft³
2	17.05…344.2	45.82…1515	67.13…2686	85.45…3857	102.0…5028	131.6…7370	158.2…9711	182.7…12053	287.4…237062
3	37.57…758.4	100.9…3338	147.9…5918	188.3…8497	224.7…11077	290.0…16236	348.5…21395	402.6…26554	633.1…52350
4	64.69…1306	173.8…5748	254.7…10190	324.2…14632	386.9…19074	499.3…27959	600.2…36843	693.2…45727	1090…90148
5	101.7…2052	273.2…9033	400.2…16014	509.5…22995	608.0…29976	7841.7…43937	943.2…57899	1089…71861	1713…141669
6	146.8…2964	394.5…13045	578.0…23126	735.7…33207	878.0…43288	1133…63450	1362…83612	1573…103774	2474…204583
8	254.2…5132	683.1…22589	1001…40045	1274…57501	1520…74958	1962…109871	2359…144784	2724…179696	4284…354261
10	400.7…8090	1077…35605	1578…63120	2008…90636	2397…118151	3093…173182	3718…228213	4294…283244	6753…558398
12	568.8…11483	1528…50540	2239…89598	2850…128655	3402…167713	4390…245828	5277…323942	6095…402057	9585…792632
14	687.6…13880	1848…61090	2707…108301	3446…155512	4112…202722	5307…297143	6379…391565	7368…485986	11586…958092
16	898.1…18129	2413…79792	3535…141454	4500…203117	5371…264780	6931…388106	8332…511431	9623…634757	15133…1251385
18	1137…22947	3054…100998	4475…179050	5696…257101	6798…335152	8773…491254	10546…647357	12181…803459	19155…1583972
20	1413…28514	3795…125500	5561…222487	7078…319473	8447…416459	10902…610432	13104…804405	15135…998378	23802…1968241
22	1802…36384	4843…160137	7095…283891	9032…407645	10779…531399	13910…778907	16721…1026414	19313…1273922	30371…2511460
24	2043…41241	5489…181516	8042…321790	10237…462065	12218…602340	15767…882889	18953…1163439	21891…1443988	34426…2846736
26	2545…51370	6838…226099	10018…400827	12752…575555	15219…750284	19640…1099741	23609…1449197	27268…1798654	42882…3545938
28	2964…59830	7964…263335	11668…466839	14852…670343	17725…873848	22874…1282857	27497…1687865	31758…2094874	49944…4129918
30	3415…68935	9176…303408	13443…537881	17112…772353	20422…1006826	26355…1475772	31681…1944717	36591…2413663	57544…4758391
32	3743…75563	10058…332582	14736…589601	18758…846619	22386…1103638	28890…1617675	34727…2131712	40110…2645750	63077…5215936
36	4751…95902	12765…422098	18702…748294	23806…1074490	28411…1400687	36665…2053079	44074…2705471	50906…3357864	80054…6619826

[1] Standard conditions of 68° F (20° C) in schedule 40 pipe

Air Minimum…Maximum Flow Rates in m³/min (SCMM [2])

Pipe Line Size mm	Pressure (bar); Density (kg/m³)								
	0 bar 1.205 kg/m³	3.4 bar 5.248 kg/m³	6.9 bar 9.409 kg/m³	11 bar 14.28 kg/m³	13.8 bar 17.61 kg/m³	20.7 bar 25.82 kg/m³	27.6 bar 34.02 kg/m³	34.5 bar 42.22 kg/m³	69 bar 83.24 kg/m³
50	0.4829…9.748	1.288…42.45	1.902…76.11	2.512…115.5	2.889…142.5	3.729…208.8	4.482…275.2	5.177…341.6	8.141…673.4
75	1.064…21.48	2.838…93.52	4.190…167.7	5.535…254.6	6.365…313.9	8.215…460.1	9.875…606.3	11.41…752.5	17.94…1484
100	1.832…36.98	4.888…161.0	7.215…288.7	9.531…438.3	10.96…540.5	14.15…792.3	17.00…1044	19.64…1296	30.89…2555
125	2.879…58.12	7.681…253.1	11.34…453.8	14.98…688.9	17.23…849.4	22.23…1245	26.72…1641	30.86…2036	48.54…4015
150	4.157…83.93	11.09…365.5	16.37…655.3	21.63…994.8	24.88…1227	32.10…1798	38.59…2369	44.57…2941	70.09…5798
200	7.199…145.3	19.21…632.8	28.35…1135	37.46…1723	43.07…2124	55.59…3113	66.82…4103	77.18…5092	121.4…10039
250	11.35…229.1	30.27…997.5	44.69…1789	59.04…2715	67.90…3348	87.62…4908	105.3…6467	121.7…8027	191.3…15824
300	16.11…325.2	42.97…1416	63.44…2539	83.81…3854	96.38…4752	124.4…6966	149.5…9180	172.7…11393	271.6…22462
350	19.47…393.0	51.95…1712	76.68…3069	101.3…4659	115.3…5659	150.3…8420	180.7…11096	208.7…13772	328.3…27151
400	25.43…513.4	67.85…2235	100.2…4008	132.3…6085	152.2…7503	196.4…10998	236.0…14493	272.6…17988	428.7…35462
450	32.19…649.8	85.88…2830	126.8…5073	167.5…7702	192.6…9497	248.5…13921	298.8…18345	345.1…22768	542.7…44887
500	40.00…807.4	106.7…3516	157.5…6304	208.1…9571	239.3…11801	308.8…17298	371.3…22795	428.8…28292	674.3…55776
550	51.04…1030	136.2…4486	201.0…8044	265.5…12212	305.4…15058	394.1…22072	473.7…29086	547.1…36100	860.5…71170
600	57.85…1168	154.3…5085	227.8…9118	301.0…13842	346.1…17068	446.7…25019	537.0…32969	620.2…10919	975.3…80671
650	72.06…1455	192.3…6334	283.8…11358	374.9…17242	431.1…21261	556.4…31164	668.9…41067	772.5…50970	1215…100485
700	83.93…1694	223.9…7378	330.5…13228	436.7…20082	502.2…24762	648.0…36296	779.0…47830	899.7…59364	1415…117034
750	96.70…1952	258.0…8500	380.8…15241	503.1…23138	578.6…28530	746.7…41820	897.5…55109	1037…68398	1630…134844
800	106.0…2140	282.8…9318	417.5…16707	551.5…25362	634.2…31274	818.5…45841	983.9…60408	1136…74975	1787…147810
900	134.5…2716	358.9…118.26	529.8…21203	699.9…32189	804.9…39691	1039…58179	1249…76667	1442…95154	2268…187593

[2] Standard conditions of 68° F (20° C) in schedule 40 pipe

DIMENSIONS

VN2000 Hot Tap Insertion Meter, Integral Mount

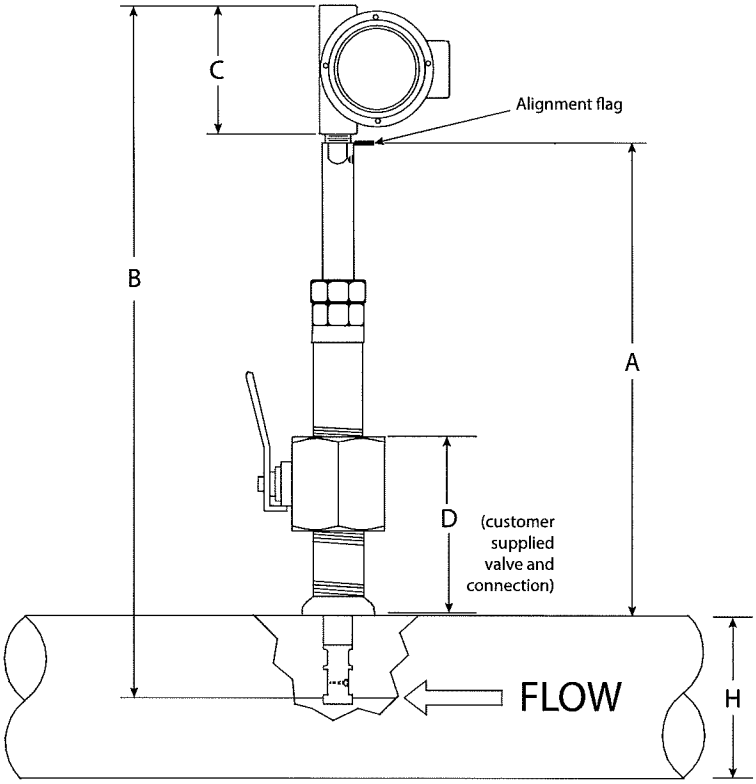

H		A		B		C		(should not exceed) D	
in.	mm	in.	mm	in.	mm	in.	mm	in.	mm
2	51	27.75	705	36	914	7	178	10	254
4	102	26.75	679	36	914	7	178	10	254
6	152	25.75	654	36	914	7	178	10	254
8	203	24.75	629	36	914	7	178	10	254
10	254	23.75	603	36	914	7	178	10	254
12	305	22.75	578	36	914	7	178	10	254
14	356	21.75	552	36	914	7	178	10	254
16	406	20.75	527	36	914	7	178	10	254
18	457	19.75	502	36	914	7	178	10	254
20	508	18.75	476	36	914	7	178	10	254
22	559	18.75	476	36	914	7	178	10	254
24	610	18.75	476	36	914	7	178	10	254
26	660	18.75	476	36	914	7	178	10	254
28	711	18.75	476	36	914	7	178	10	254
30	762	18.75	476	36	914	7	178	10	254
32	813	18.75	476	36	914	7	178	10	254
34	864	18.75	476	36	914	7	178	10	254
36	914	18.75	476	36	914	7	178	10	254

Power Plug

The multi-pole connector virtually eliminates wiring errors in the field. Simply plug the connector into the top of the enclosure and screw it down. This design saves time and money because the electronics package never comes out of the enclosure. No internal wiring is required and no connecting of hard-to-reach terminal blocks. This design also allows for a conduit connection to be attached over the power plug.

Simply plug and play!

Optional Insertion/Extraction Tool Dimensions

The insertion/extraction tool can be used for installation under extreme pressures and makes it easy for the installer to adjust and fine tune their flow instrumentation. The tool eliminates the weight, bulkiness and equipment malfunction that occurs when insertion tools are permanently connected to the instrument and exposed to harsh elements. Once the installation is complete, the installer can quickly remove the tool and store it in a location away from harsh environments.

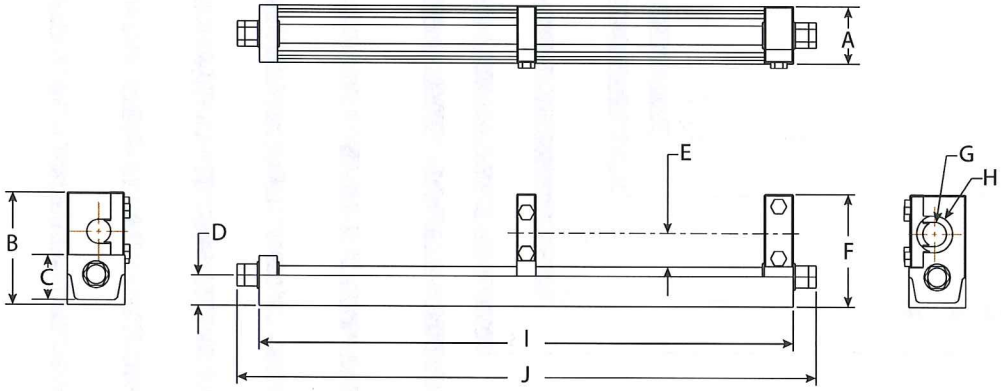

A		B		C		D		E		F		G		H		I		J	
in.	mm	in.	mm	in.	mm	in.	mm	in.	mm	in.	mm	in.	mm	in.	mm	in.	mm	in.	mm
3	76	5.8	147	2.3	58	1.6	41	1.7	43	5.8	147	1.2	30	1.9	48	28.2	717	30.6	778

Optional External RTD for BTU/Energy Measurement

An insertion RTD is used in conjunction with an RTD internal to the probe to measure the temperature difference across a heat exchanger. The energy transfer can be calculated by multiplying the temperature difference with the mass flow rate.

PART NUMBER CONFIGURATION

Model	
VN2000 Hot Tap Insertion Vortex Meter	VF
Pipe Line Size (used for meter configuration only)	
2 inch	A020
3 inch	A030
4 inch	A040
6 inch	A060
8 inch	A080
10 inch	A100
12 inch	A120
14 inch	A140
16 inch	A160
18 inch	A180
20 inch	A200
22 inch	A220
24 inch	A240
26 inch	A260
28 inch	A280
30 inch	A300
32 inch	A320
34 inch	A340
36 inch	A360
Material	
Stainless Steel, Commerical	C
End Fittings	
1-1/2 inch NPT	NTS
1-1/2 Flange ANSI 150	FAS
1-1/2 Flange ANSI 300	FBS
Process Temperature & Pressure	
Standard	S
Reserved	
None	W
Measurement	
Volumetric flow rate	V
Mass flow, temperature	T
Heat energy/BTU (not available for sensor replacement) [1]	E
Transmitter Type	
Integral, 24V DC	E
Remote, 24V DC	F
Cable Length	
None (integral/meter mount or replacement sensor)	WW
10 feet/3 m (remote transmitter) [2]	AB
30 feet/15 m (remote transmitter) [2]	AF
Fluid & Pipe Type	
Liquid-Chilled (not available with Measurement option V)	C
Liquid-Heating (not available with Measurement option V)	H
Liquid (available with Measurement option V only)	L
Steam	S
Gas	G
Display	
Standard	S
Communication/Output	
4-20 mA and Pulse Output	S
Modbus RTU	M
Testing & Tagging	
Standard Testing	G

1.) One internal temperature sensor and one external temperature sensor included.
2.) Specify cable length from sensor to transmitter. Transmitter power 10 foot cable included.

Control. Manage. Optimize.

Trademarks appearing in this document are the property of their respective entities. Due to continuous research, product improvements and enhancements, Badger Meter reserves the right to change product or system specifications without notice, except to the extent an outstanding contractual obligation exists. © 2018 Badger Meter, Inc. All rights reserved.

www.badgermeter.com

The Americas | Badger Meter | 4545 West Brown Deer Rd | PO Box 245036 | Milwaukee, WI 53224-9536 | 800-876-3837 | 414-355-0400
México | Badger Meter de las Americas, S.A. de C.V. | Pedro Luis Ogazón N°32 | Esq. Angelina N°24 | Colonia Guadalupe Inn | CP 01050 | México, DF | México | +52-55-5662-0882
Europe, Eastern Europe Branch Office (for Poland, Latvia, Lithuania, Estonia, Ukraine, Belarus) | Badger Meter Europe | ul. Korfantego 6 | 44-193 Knurów | Poland | +48-32-236-8787
Europe, Middle East and Africa | Badger Meter Europa GmbH | Nurtinger Str 76 | 72639 Neuffen | Germany | +49-7025-9208-0
Europe, Middle East Branch Office | Badger Meter Europe | PO Box 341442 | Dubai Silicon Oasis, Head Quarter Building, Wing C, Office #C209 | Dubai / UAE | +971-4-371 2503
Slovakia | Badger Meter Slovakia s.r.o. | Racianska 109/B | 831 02 Bratislava, Slovakia | +421-2-44 63 83 01
Asia Pacific | Badger Meter | 80 Marine Parade Rd | 21-06 Parkway Parade | Singapore 449269 | +65-63464836
China | Badger Meter | 7-1202 | 99 Hangzhong Road | Minhang District | Shanghai | China 201101 | +86-21-5763 5412
Switzerland | Badger Meter Swiss AG | Mittelholzerstrasse 8 | 3006 Bern | Switzerland | +41-31-932 01 11

Natural Gas Flow Meter

t-mass 65F

Product description
Thermal Mass Flow Measuring System
Direct Mass Flow Measurement of Gases

Your benefits
Direct measurement of gas mass flow. Provides temperature as an output.

The Proline transmitter concept comprises:

- Modular device and operating concept resulting in a higher degree of efficiency
- Quick setup operating menus for ease of commissioning
- On board software freely allows the selection of up to 20 pure gases and creation of mixed gases with a maximum of 8 components (e. g. Biogas)

The t-mass sensors offer:

- Negligible pressure drop or loss
- Wide turndown of up to 100:1
- Each device individually calibrated and delivered with a traceable certificate
- Can be calibrated with flow conditioner on request.

Field of application
For measuring the mass flowrate of a wide range of gas types e.g.

- Compressed air
- Natural gas flow to boilers / dryers
- Carbon Dioxide flow in breweries
- Biogas and aeration air in waste water plants
- Gas production (e. g. Ar, N_2, CO_2, He, O_2)
- Leakage detection

Approvals for hazardous area:

- ATEX, FM, CSA, IEC Ex, NEPSI

Connection to all common process control systems:

- HART, PROFIBUS DP, MODBUS RS485

Order information
Production time:
Endress+Hauser works to a defined standard production time (from order entry to goods issue) depending on the variant of the t-mass 65F. Production times can be confirmed via your contact person or via the online shop.

Distribution:
Endress+Hauser will ship your order direct to your delivery address. In certain cases express or emergency shipments can be made on request.

Track & Trace:
Check your order status online using your reference number or the Endress+Hauser order confirmation number.

Spare Parts Logistics:
Spare parts are handled as standard products with a short standard delivery time. On request we deliver on shortest possible delivery time (extra charge).

© Endress+Hauser 2010
Endress+Hauser Instruments International AG - Kägenstr. 2 - 4153 Reinach/BL, Switzerland
Tel.: +41 61 715 81 00, Fax: +41 61 715 25 00, Email: info@ii.endress.com
For further information: www.endress.com

Natural Gas Flow Meter

t-mass 65F

Endress+Hauser

Technical data

Measure Task	Gas
Measuring Principle	Thermal
Main features	Mass flowmeter for measurement of **standard single / mixture gas applications**
Features	Quick Setup Dynamic temperature compensation 20 selectable gases Programmable gas mixture In-situ calibration External pressure input Validation HistoROM S-DAT, HistoROM T-DAT 2 Totalizers
Diameter	DN 15...100 1/2"...4"
Measuring range	Gas and process condition dependent.
Process temperature	-40... +100°C -40... +212°F
Pressure range	-0.5... 40barg -7.25... 580 psig
Measured error	Mass: +-1.5%
Communication	HART PROFIBUS DP MODBUS RS485
Outputs	2 x 0/4...20mA Pulse/Frequency (1KHz, active/passive) 2 x Relays Status
Inputs	Status 0/4...20mA
Ex-Approvals	ATEX FM CSA IEC Ex NEPSI
Protection electronic	IP 67 NEMA 4x
Display/Operation	Two line backlit LCD, alphanumeric (16 characters) Push buttons
Advantages	Direct mass flow measurement Multi-variable(Flow, Temperature) Low flow sensitivity High turndown ratio(100:1) Negligible pressure loss No moving parts
Components	Optional flow conditioner Remote transmitter

© Endress+Hauser 2010
Endress+Hauser Instruments International AG - Kägenstr. 2 - 4153 Reinach/BL, Switzerland
Tel.: +41 61 715 81 00, Fax: +41 61 715 25 00, Email: info@ii.endress.com
For further information: www.endress.com

MAKE-UP WATER
Meters

Oval Gear
Industrial Oval Gear Flow Meters

Industrial Oval Gear

Inline and Flanged Meters

1/4 in., 1/2 in., 3/4 in., 1 in., 1 in. HF, 1-1/2 in., 2 in., 3 in.

DESCRIPTION

The Badger Meter® Industrial Oval Gear Meter, Model IOG is a modular flow meter design, economical yet highly accurate and rugged. The model IOG is designed for a variety of chemical applications including petroleum based fluids, water solutions and any other liquid compatible with the materials of construction.

OPERATING PRINCIPLE

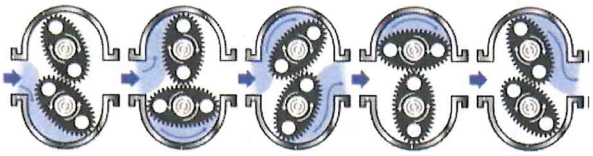

Fluid enters the inlet port and then passes through the metering chamber. Inside the chamber, fluid forces the internal gears to rotate before exiting through the outlet port. Each rotation of the gears displaces a specific volume of fluid. As the gears rotate, a magnet on each end of the gear passes a reed switch in the top-mounted register's circuit board. The reed switches send pulses to the microprocessor in the register to change the LED display segments. The oval gear meter can be used in conjunction with a variety of industrial registers. See the online documentation for Oval Gear Meter Registers, ER-420 Flow Rate/Totalizer, and the ER-500 Flow Monitor for more information on the available register options.

APPLICATIONS

Due to the rugged nature of this particular flow measurement technology, the Industrial Oval Gear Meter can be used in a number of applications where conventional meters are not acceptable. Whether the liquid being measured is very viscous or highly corrosive, the oval gear meter can handle it. The Industrial Oval Gear Meter is designed for a variety of applications including petroleum based fluids, water solutions, and any other liquid compatible with the materials of construction.

FEATURES

- Compact size
- High accuracy and repeatability
- Factory calibrated (stated in pulses per liter)
- Flow range of 0.067…185 gpm (0.25…700 lpm)
- Flexibility of installation options (vertical installation or horizontal installation)
- Low pressure drop
- Minimum number of wearable parts for long product life and easy field servicing
- Wide range of instrumentation available for control system interfacing

MAXIMUM VISCOSITY

- 1000 cP
- Consult the factory for higher viscosity applications.

OPERATING FLUID TEMPERATURES

Rotor Material	Operating Temperature Range
Stainless Steel	–22…240° F (–30…120° C)
LCP	–22…176° F (–30…80° C)

METER STORAGE TEMPERATURES

The meter storage temperature range is –67…248° F (–55…125° C).

PRESSURE RATING

		Pressure Rating			
		psi			bar
Port Size	Housing Material	NPT/BSP	ANSI 150#	ANSI 300#	DIN
1/4 in.	Stainless	1500	—	—	—
	Aluminum	1000			
1/2 in.	Stainless	3000	275	—	16 bar
	Aluminum	2000			
3/4 in.	Stainless	3000	275	720	16 bar
	Aluminum	2000		—	
1 in.	Stainless	3000	275	720	16 bar
	Aluminum	2000		—	
1 in. HF	Stainless	3000	275	720	16 bar
	Aluminum	2000		—	
1-1/2 in.	Stainless	2000	275	720	16 bar
	Aluminum	1500		—	
2 in.	Stainless	1500	275	720	16 bar
	Aluminum	1000		—	
3 in.	Stainless	1000	275	720	16 bar
	Aluminum	750		—	

Badger Meter

IOG-DS-00016-EN-12 (September 2016)

Product Data Sheet

DIMENSIONS

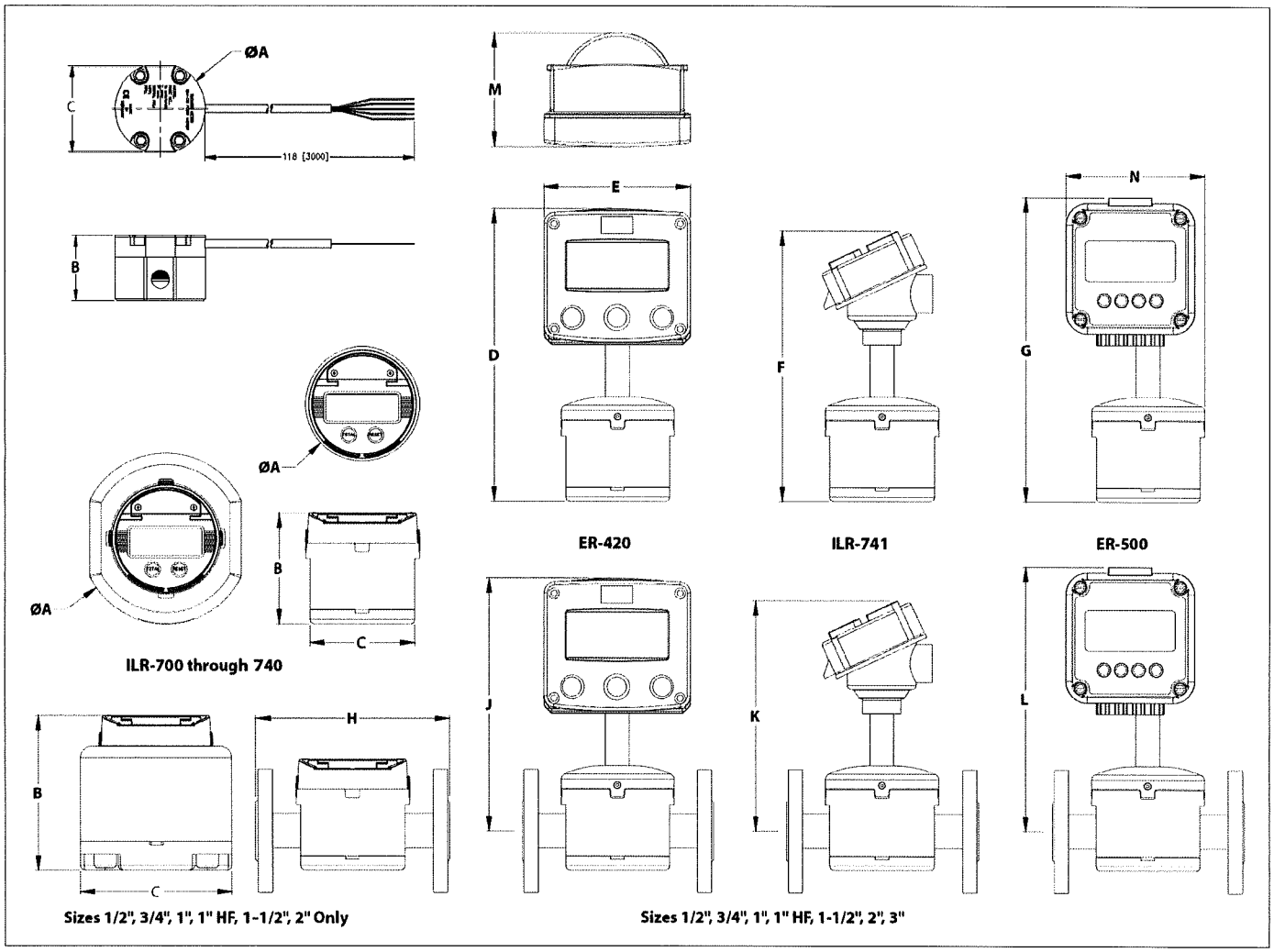

Port Size	A	B	C	D	E	F	G	H	J	K	L	M	N
1/4 in.	2.17 in. (55 mm)	1.54 in. (39 mm)	2.05 in. (52 mm)	—	—	—	—	—	—	—	—	—	—
1/2 in.	3.94 in. (100 mm)	3.44 in. (87.5 mm)	3.62 in. (92 mm)	9.70 in. (246.4 mm)	5.12 in. (130 mm)	8.93 in. (226.8 mm)	10.10 in. (256.5 mm)	6.69 in. (170 mm)	8.45 in. (214.6 mm)	7.68 in. (195.1 mm)	8.89 in. (225.8 mm)	3.94 in. (100.2 mm)	4.84 in. (122.9 mm)
3/4 in.	3.94 in. (100 mm)	3.84 in. (97.5 mm)	3.62 in. (92 mm)	10.10 in. (256.5 mm)	5.12 in. (130 mm)	9.33 in. (236.9 mm)	10.50 in. (266.7 mm)	6.69 in. (170 mm)	8.70 in. (220.9 mm)	7.93 in. (201.4 mm)	9.14 in. (232.2 mm)	3.94 in. (100.2 mm)	4.84 in. (122.9 mm)
1 in.	3.94 in. (100 mm)	3.84 in. (97.5 mm)	3.62 in. (92 mm)	10.10 in. (256.5 mm)	5.12 in. (130 mm)	9.33 in. (236.9 mm)	10.50 in. (266.7 mm)	6.69 in. (170 mm)	8.70 in. (220.9 mm)	7.93 in. (201.4 mm)	9.14 in. (232.2 mm)	3.94 in. (100.2 mm)	4.84 in. (122.9 mm)
1 in. HF	3.94 in. (100 mm)	3.89 in. (98.9 mm)	3.62 in. (92 mm)	10.15 in. (257.8 mm)	5.12 in. (130 mm)	9.38 in. (238.3 mm)	10.55 in. (268.0 mm)	6.69 in. (170 mm)	8.60 in. (218.4 mm)	7.83 in. (198.8 mm)	9.04 in. (229.6 mm)	3.94 in. (100.2 mm)	4.84 in. (122.9 mm)
1-1/2 in.	5.51 in. (140 mm)	4.93 in. (125.3 mm)	4.92 in. (125 mm)	11.15 in. (283.2 mm)	5.12 in. (130 mm)	10.38 in. (263.7 mm)	11.51 in. (292.4 mm)	8.35 in. (212 mm)	8.90 in. (226.1 mm)	8.13 in. (206.5 mm)	9.31 in. (236.5 mm)	—	—
2 in.	5.91 in. (150 mm)	5.34 in. (135.6 mm)	5.28 in. (134 mm)	11.60 in. (294.6 mm)	5.12 in. (130 mm)	10.83 in. (275.1 mm)	11.96 in. (303.8 mm)	10.39 in. (264 mm)	9.16 in. (232.7 mm)	8.39 in. (213.1 mm)	9.57 in. (243.1 mm)	—	—
3 in.	8.27 in. (210 mm)	—	7.09 in. (180 mm)	12.57 in. (319.3 mm)	5.12 in. (130 mm)	11.80 in. (299.7 mm)	12.93 in. (328.4 mm)	13.54 in. (344 mm)	9.58 in. (243.3 mm)	8.81 in. (223.8 mm)	9.99 in. (253.8 mm)	—	—

NOTE: ILR register series not compatible with 3" meter.

PRESSURE DROP VS FLOW RATE

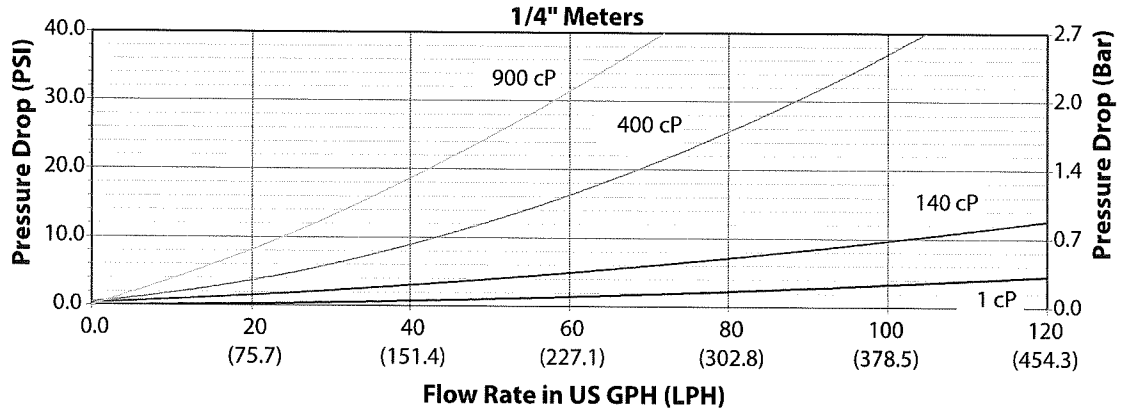

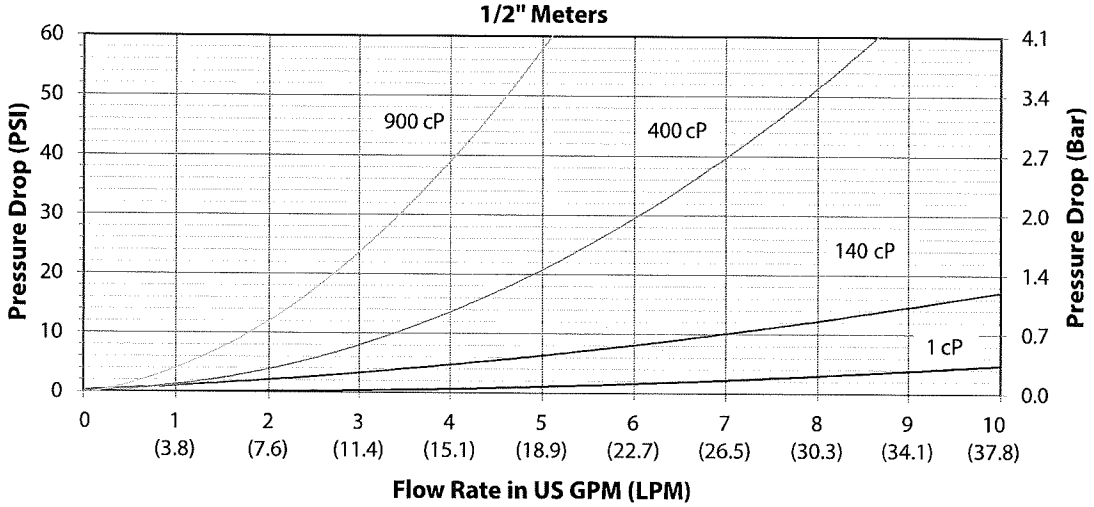

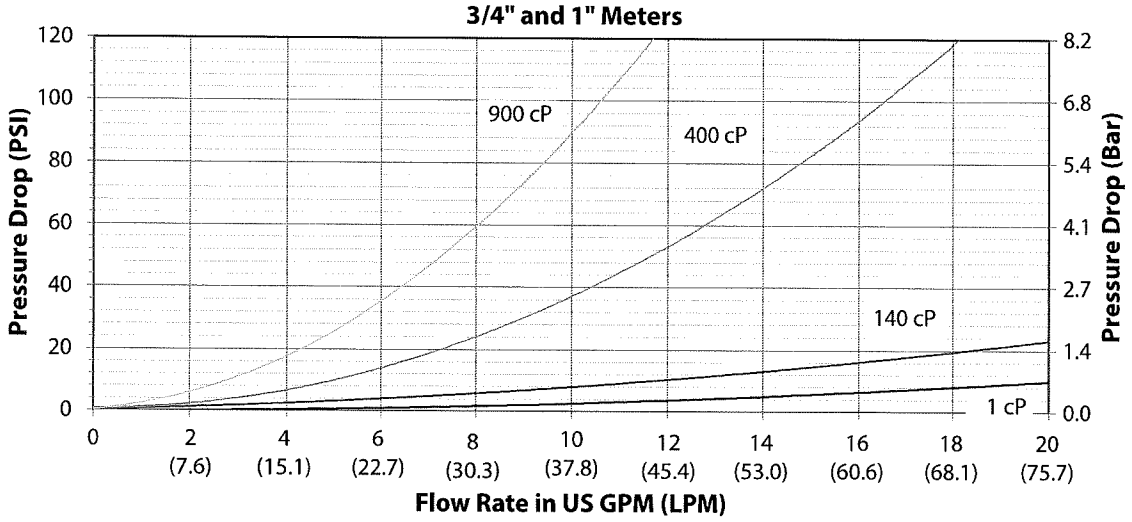

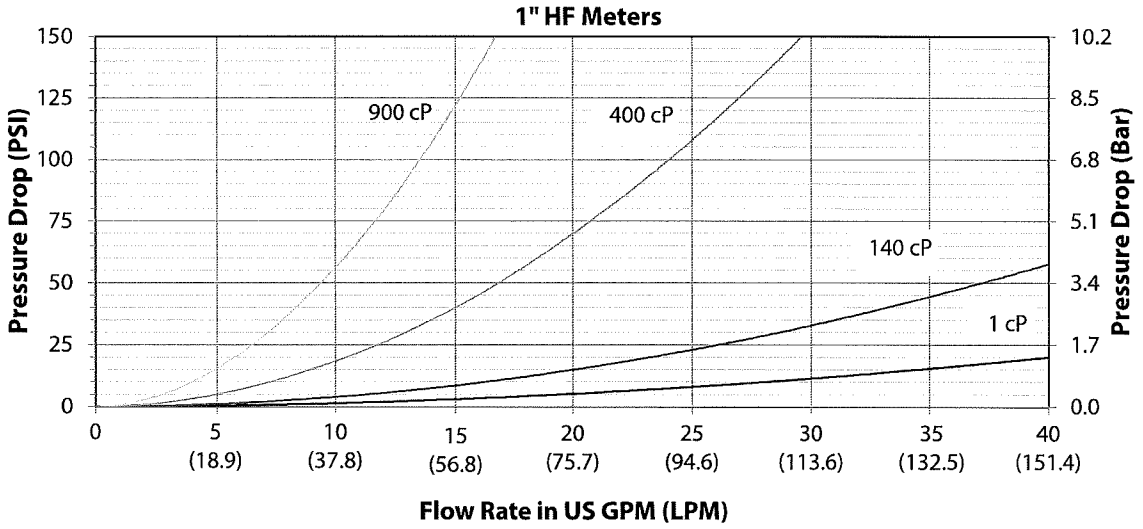
1" HF Meters
Pressure Drop (PSI)
150
125
100
75
50
25
0
Pressure Drop (Bar)
10.2
8.5
6.8
5.1
3.4
1.7
0.0
900 cP
400 cP
140 cP
1 cP
0
5 (18.9)
10 (37.8)
15 (56.8)
20 (75.7)
25 (94.6)
30 (113.6)
35 (132.5)
40 (151.4)
Flow Rate in US GPM (LPM)

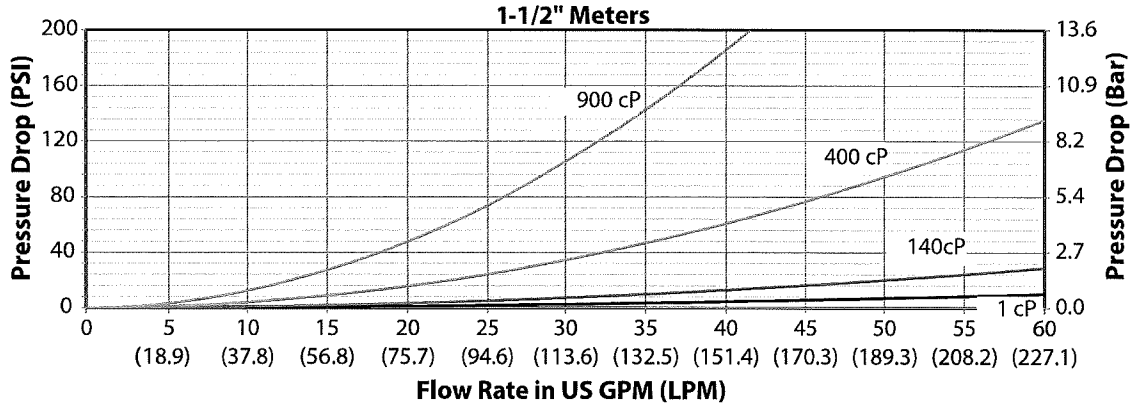
1-1/2" Meters
Pressure Drop (PSI)
200
160
120
80
40
0
Pressure Drop (Bar)
13.6
10.9
8.2
5.4
2.7
0.0
900 cP
400 cP
140cP
1 cP
0
5 (18.9)
10 (37.8)
15 (56.8)
20 (75.7)
25 (94.6)
30 (113.6)
35 (132.5)
40 (151.4)
45 (170.3)
50 (189.3)
55 (208.2)
60 (227.1)
Flow Rate in US GPM (LPM)

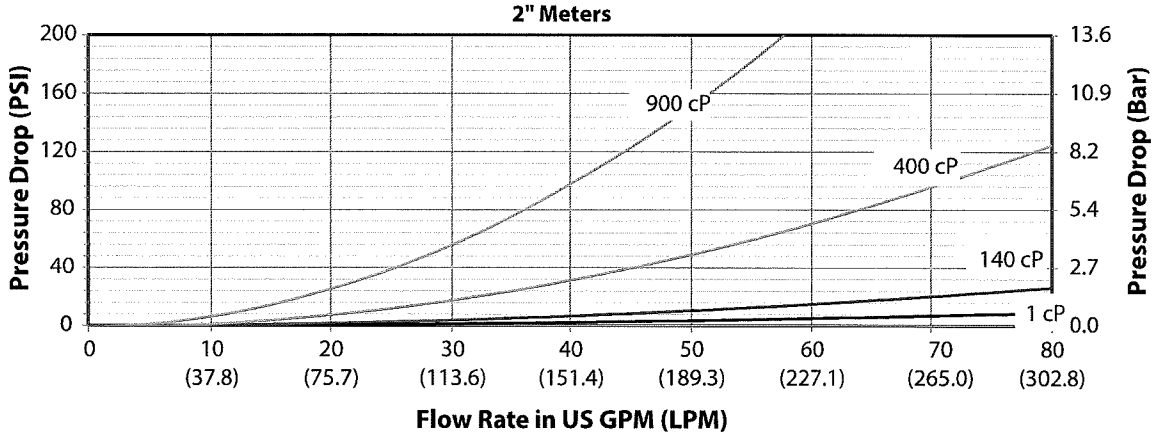
2" Meters
Pressure Drop (PSI)
200
160
120
80
40
0
Pressure Drop (Bar)
13.6
10.9
8.2
5.4
2.7
0.0
900 cP
400 cP
140 cP
1 cP
0
10 (37.8)
20 (75.7)
30 (113.6)
40 (151.4)
50 (189.3)
60 (227.1)
70 (265.0)
80 (302.8)
Flow Rate in US GPM (LPM)

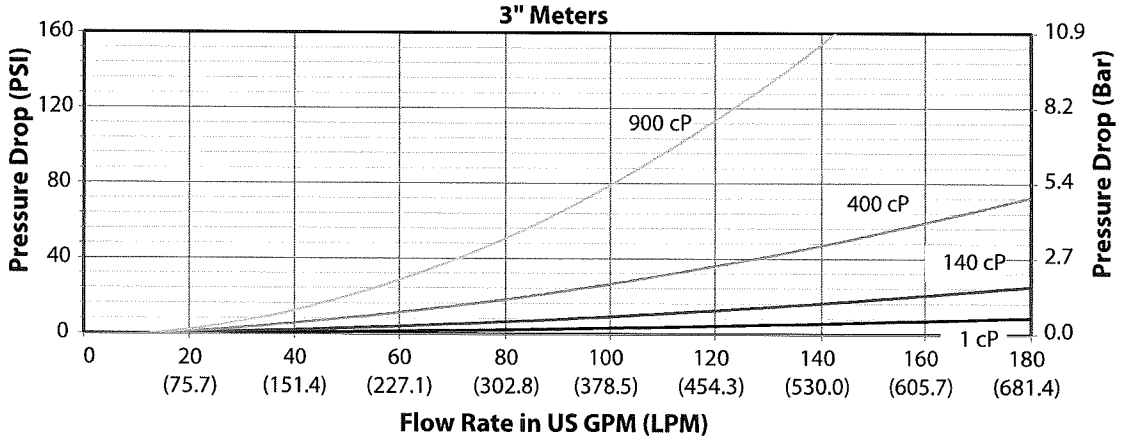

FLOW RANGE

Port Size	American (gpm)		SI (lpm)		Fluid Viscosity	Accuracy (%)	Repeatability (%)
	Low	High	Low	High			
1/4 in.	0.067	2.2	0.25	8.3	> 5.0 cP	± 1.0	± 0.03
	0.11	2.2	0.44	8.3	< 5.0 cP	± 2.5	
1/2 in.	0.25	8.0	1.0	30	> 5.0 cP	± 0.5	± 0.03
	0.50	6.6	2.0	25	< 5.0 cP	± 2.0	
3/4 in.	0.50	16	2.0	60	> 5.0 cP	± 0.5	± 0.03
	1.20	14	4.5	53	< 5.0 cP	± 2.0	
1 in.	0.6	18	2.3	68	> 5.0 cP	± 0.5	± 0.03
	1.4	16	5.3	60	< 5.0 cP	± 2.0	
1 in. HF	1.5	45	5.7	170	> 5.0 cP	± 0.5	± 0.03
	2.5	40	9.5	151	< 5.0 cP	± 2.0	
1-1/2 in.	2.5	65	9.5	246	> 5.0 cP	± 0.5	± 0.03
	4.0	60	15	227	< 5.0 cP	± 1.0	
2 in.	4.0	100	15	379	> 5.0 cP	± 0.5	± 0.03
	6.0	100	23	379	< 5.0 cP	± 1.0	
3 in.	5.0	185	19	700	> 5.0 cP	± 0.5	± 0.03
	10	185	38	700	< 5.0 cP	± 1.0	

MATERIALS OF CONSTRUCTION

Port Size	Wetted Parts							Bolts
	Housing	Cover	Spindle	Gears	Bearings	Magnet	O-Ring	
1/4 in.	316 SS	316 SS	316 SS	316 SS	Fluorosint 500	Neodymium Au Plated	Aflas	316 SS
	6061 Al	6061 Al					Viton	
1/2 in.	316 SS	316 SS	316 SS	316 SS	Graphalloy	Alnico	Aflas	316 SS
	6061 Al	6061 Al		LCP			Viton	
3/4 in.	316 SS	316 SS	316 SS	316 SS	Graphalloy	Alnico	Aflas	316 SS
	6061 Al	6061 Al		LCP			Viton	
1 in.	316 SS	316 SS	316 SS	316 SS	Graphalloy	Alnico	Aflas	316 SS
	6061 Al	6061 Al		LCP			Viton	
1 in. HF	316 SS	316 SS	316 SS	316 SS	Fluorosint	Neodymium Ni Plated	Aflas	316 SS
	6061 Al	6061 Al					Viton	
1-1/2 in.	316 SS	316 SS	316 SS	316 SS	Fluorosint	Neodymium Ni Plated	Aflas	316 SS
	6061 Al	6061 Al					Viton	
2 in.	316 SS	316 SS	316 SS	316 SS	Fluorosint	Neodymium Ni Plated	Aflas	316 SS
	6061 Al	6061 Al					Viton	
3 in.	316 SS	316 SS	316 SS	316 SS	Fluorosint	Neodymium Ni Plated	Aflas	316 SS
	6061 Al	6061 Al					Viton	

NOTE: Upon request, additional O-Ring options are Buna-N and EPDM.

6" Domestic Meter

Badger Meter

Recordall® Turbo Series Meters

Models 160 (1-1/2 in.), 200 (2 in.), 450 (3 in.), 1000 (4 in.), 2000 (6 in.), 3500 (8 in.), 5500 (10 in.) and 6200 (12 in.) NSF/ANSI Standards 61 and 372 Certified

DESCRIPTION

Recordall Turbo Series meters meet or exceed the most recent revision of AWWA Standard C701 Class II Standards and are available in a lead-free bronze alloy for sizes 1-1/2 in. through 10 in. and cast iron for 12 in. meters. Turbo Series meters comply with the lead-free provisions of the Safe Drinking Water Act. Sizes 1-1/2 in. through 10 in. meters are also certified to NSF/ANSI Standards 61 and 372 (Trade Designation: Turbo Series LL-NS) and carry the NSF-61 mark on the housing. All components of the lead-free alloy meter (housing, measuring element, seals and so on) comprise the certified system.

Models 160 through 6200 are designed for 1-1/2 in. through 12 in. applications. These meters feature:

- Direct coupled turbine based on an exclusive in.floating rotor in. design that reduces bearing friction—and associated wear and tear.
- Low pressure loss for improved system efficiency.
- Exceptional registration accuracy across low flow rate, normal operating flow rate and maximum continuous operation flow.
- Permanently sealed, tamper-resistant register or encoder.
- Integral strainer option for sizes 1-1/2 in. through 4 in. help protect your system from damaging debris and related downtime.
- Meters and encoders are compatible with Badger Meter AMR/AMI meter reading systems and other approved reading technologies.

Applications: Recordall Turbo Series meters are designed for cold water, commercial and industrial applications where flows are consistent medium to high flows. Applications include hotels, apartment buildings, irrigations centers and manufacturing and processing plants. Turbo Series meters help reduce day-to-day maintenance costs while delivering accurate and efficient performance.

Operation & Performance: Direct magnetic drive is achieved when the magnet carrier is driven by a gear train coupled to the rotor. The gear train consists of two sets of gears connected by a vertical transmission shaft. One gear set is at the magnet carrier, the other is a worm gear set at the rotor shaft. When water flows into the Turbo Series meter measuring element, it contacts the multi-vaned rotor. The resulting rotor rotation is then transmitted by magnetic coupling to a sealed register or encoder. The direct magnetic drive is built to provides a reliable meter-to-registration coupling.

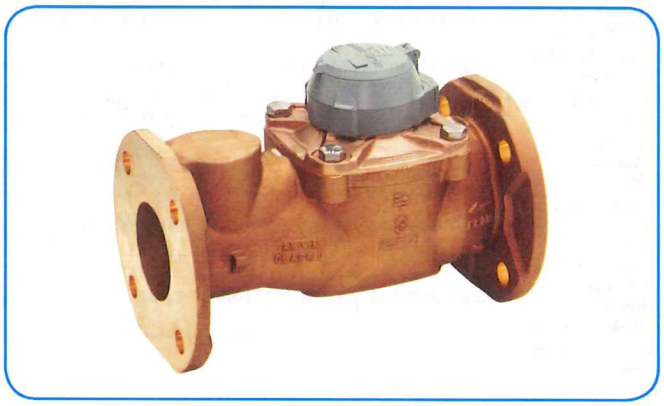

Tamper-Proof Features: Unauthorized removal of the register or encoder is inhibited by the option of a tamper detection seal wire screw, TORX® tamper-resistant seal screw or the proprietary tamper-resistant keyed seal screw. Each can be installed at the meter site or at the factory.

Construction: The Recordall Turbo Series meter is constructed in compliance with ANSI and AWWA C701 standards. It consists of the following basic components: meter housing, interchangeable, unitized measuring element and permanently sealed direct reading registers or encoders.

The measuring element consists of the transmission coupling, rotor, inlet and outlet straightening vanes with nose cones, and calibration ring assembly. The unique inlet and outlet straightening vanes minimize swirl from piping arrangements upstream as well as downstream.

A strainer is recommended to help ensure optimal flow conditioning and protection for the measuring element. An integral strainer is available as an option for 1-1/2 in. through 4 in. meter sizes. The stainless steel strainer is built into the inlet end and includes a removable cover plate to permit easy access for routine cleaning. External strainers are available in sizes 2 in. through 12 in.

To simplify maintenance, the registers or encoders and measuring elements can be removed without removing the meter housing. Interchangeability of certain parts between meters also minimizes spare parts inventory investment.

Meter Installation: The meter is designed for installations where flow is in one direction only. Companion flanges for installation of meters on various pipe types and sizes are available in cast iron or NL bronze as an option. See the *"Recordall Turbo Series Meters User Manual"* for specific instructions.

SPECIFICATIONS

Turbo Series Model	160 1-1/2 in. (40 mm)	200 2 in. (50 mm)	450 3 in. (80 mm)	1000 4 in. (100 mm)	2000 6 in. (150 mm)	3500 8 in. (200 mm)	5500 10 in. (250 mm)	6200 12 in. (300 mm)
Meter Flanges AWWA 125 Pound Class	Elliptical	Elliptical or Round	Round	Round	Round	Round	Round	Round AWWA 125 lb class
Typical Operating Range (100% ± 1.5%)	4…200 gpm (0.9…45.4 m³/h)	4…310 gpm (0.9…70.4 m³/h)	5…550 gpm (1.1…124.9 m³/h)	10…1250 gpm (2.3…284 m³/hr)	20…2500 gpm (4.5…568 m³/h)	30…4500 gpm (6.8…1022 m³/h)	50…7000 gpm (11.4…1590 m³/h)	90…8800 gpm (20.5…1998 m³/h)
Typical Low Flow (95% min.)	2.5 gpm (0.6 m³/h)	2.5 gpm (0.6 m³/h)	4 gpm (0.9 m³/h)	6 gpm (1.4 m³/h)	12 gpm (2.7 m³/h)	20 gpm (4.5 m³/h)	30 gpm (6.8 m³/h)	65 gpm (14.8 m³/h)
Max. Continuous Flow	160 gpm (36 m³/h)	200 gpm (45.4 m³/h)	450 gpm (102.2 m³/h)	1000 gpm (227.1 m³/h)	2000 gpm (454 m³/h)	3500 gpm (795 m³/h)	5500 gpm (1250 m³/h)	6200 gpm (1408 m³/h)
Maximum Intermittent Flow	200 gpm (45.4 m³/h)	310 gpm (70.4 m³/h)	550 gpm (124.9 m³h)	1250 gpm (284 m³h)	2500 gpm (568 m³/h)	4500 gpm (1022 m³/h)	7000 gpm (1590 m³h)	8800 gpm (1988 m³/h)
Pressure Loss at Max. Continuous Flow	3.8 psi (0.26 bar)	3.1 psi (0.21 bar)	1.8 psi (0.12 bar)	7.3 psi (0.50 bar)	4.8 psi (0.33 bar)	2.5 psi (0.17 bar)	1.6 psi (0.11 bar)	0.8 psi (0.05 bar)
Pressure Loss at Max. Continuous Flow: With Integral Strainer	9.9 psi (0.68 bar)	8.3 psi (0.57 bar)	5 psi (0.43 bar)	17.8 psi (1.2 bar)	—			
Max. Operating Pressure	150 psi (10 bar)							
Max. Operating Temperature	120° F (49° C)							
Optional Integral Strainer	Built into inlet end. Removable cover plate permits access to strainer for cleaning.				—			
Optional External Strainer	—	Available for Models 200, 450, 1000, 2000, 3500, 5500 and 6200.						
Test Plug	Standard with integral strainer; optional for other models.				Optional for Models 2000 and 3500.		—	

MATERIALS

Meter Housing	Lead-free alloy (**EXCEPTION**: Model 6200 meter housing is blue epoxy-coated cast iron)
Turbo Head	Lead-free alloy
Nose Cone & Straightening Vanes	Thermoplastic
Rotor	Thermoplastic
Rotor Radial Bearings	Lubricated thermoplastic
Rotor Thruster Bearing	Sapphire jewels
Rotor Bearing Pivots	Passivated 316 stainless steel
Calibration Mechanism	Stainless steel & thermoplastic
Magnet	Ceramic
Trim	Stainless steel
Register Housing & Cover	Thermoplastic or bronze
Optional Strainer and Trim	Stainless steel

REGISTERS / ENCODERS

Standard—Sweep-Hand Registration

The standard register is a straight-reading, permanently sealed magnetic drive register. Dirt, moisture, tampering and lens fogging problems are eliminated. The register has a six-odometer wheel totalization display, 360° test circle with center sweep hand, and flow finder to detect leaks. Register gearing is made of self-lubricating engineered polymer, which minimizes friction and provides long life. The multi-position register simplifies meter installation and reading. The register capacity for the 1-1/2 in., 2 in., 3 in. and 4 in. meters is 100,000,000 gallons (10,000,000 ft³, 1,000,000 m³). The register capacity for the 6 in., 8 in., and 10 in. meters is 1,000,000,000 gallons (100,000,000 ft³, 10,000,000 m³). The high-flow register capacity for the 12 in. meter is 10,000,000,000 gallons (1,000,000,000 ft³, 10,000,000 m³).

Registers for 1-1/2 in., 2 in., 3 in. and 4 in. Meters

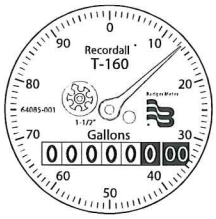

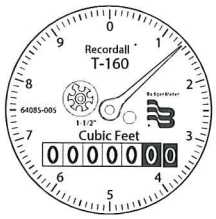

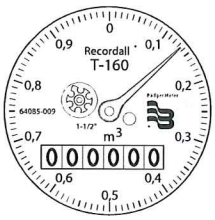

Sweep Hand Revolution

Meter Model	Gallon	Cubic Feet	Cubic Meter
160	100	10	1
200	100	10	1
450	100	10	1
1000	100	10	1

Registers for 6 in., 8 in. and 10 in. Meters

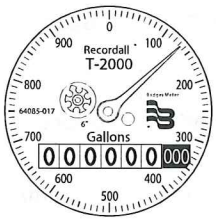

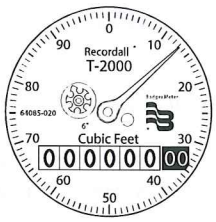

Sweep Hand Revolution

Meter Model	Gallon	Cubic Feet	Cubic Meter
2000	1000	100	10
3500	1000	100	10
5500	1000	100	10

Registers for 12 in. Meters

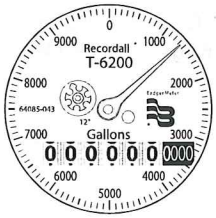

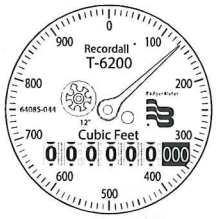

Sweep Hand Revolution

Meter Model	Gallon	Cubic Feet	Cubic Meter
6200	10000	1000	10

Optional—Encoders for AMR/AMI Reading Solutions

AMR/AMI solutions are available for all Recordall Disc Series meters. All reading options can be removed from the meter without disrupting water service. Badger Meter encoders provide years of reliable, accurate readings for a variety of applications and are also available pre-wired to Badger Meter approved AMR/AMI solutions. See details at **www.badgermeter.com**.

PHYSICAL DIMENSIONS OF METERS WITHOUT STRAINER

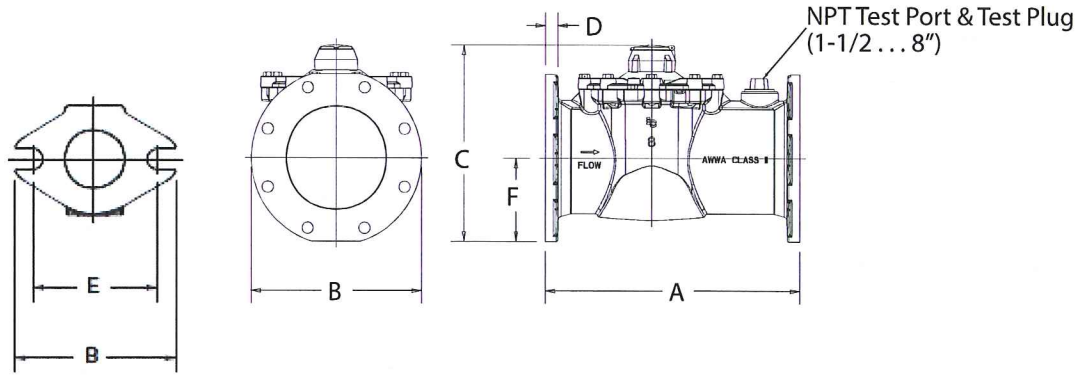

Figure 1: Sample Illustration from 8 in. Model 3500

Turbo Series Model	160	200	200	450	1000	2000	3500	5500	6200
Meter Flanges	1-1/2 in. Elliptical	2 in. Elliptical	2 in. Round	3 in. Round	4 in. Round	6 in. Round	8 in. Round	10 in. Round	12 in. Round
Meter & Pipe Size	1-1/2 in. (40 mm)	2 in. (50 mm)	2 in. (50 mm)	3 in. (80 mm)	4 in. (100 mm)	6 in. (150 mm)	8 in. (200 mm)	10 in. (250 mm)	12 in. (300 mm)
Net Weight	14.3 lb (6.5 kg)	14.9 lb (6.8 kg)	17.4 lb (7.9 kg)	31 lb (14.1 kg)	40 lb (18.1 kg)	77 lb (35 kg)	123 lb (55.7 kg)	210 lb (95.3 kg)	262 lb (118.8 kg)
Shipping Weight	16.8 lb (7.6 kg)	16.4 lb (7.4 kg)	18.9 lb (8.6 kg)	34 lb (15.4 kg)	45 lb (20.4 kg)	89 lb (40.4 kg)	147 lb (66.6 kg)	235 lb (106.6 kg)	286 lb (129.7 kg)
Qty. of Bolts	2	2	4	4	8	8	8	12	12
NPT Test Port & Test Plug (optional)	1 in. (25.4 mm)	1-1/2 in. (40 mm)	1-1/2 in. (40 mm)	2 in. (50 mm)	2 in. (50 mm)	2 in. (50 mm)	2 in. (50 mm)	—	—
Length (A)	13 in. (330 mm)	10 in. (254 mm)	10 in. (254 mm)	12 in. (305 mm)	14 in. (356 mm)	18 in. (457 mm)	20 in. (508 mm)	26 in. (660.4 mm)	19-11/16 in. (500 mm)
Width (B)	5-7/32 in. (133 mm)	5-27/32 in. (148 mm)	6 in. (152 mm)	7-1/2 in. (191 mm)	9 in. (229 mm)	11 in. (280 mm)	13-1/2 in. (343 mm)	16 in. (406.4 mm)	19 in. (482 mm)
Height (C)	6-9/32 in. (159 mm)	6-1/2 in. (165 mm)	7-3/32 in. (180 mm)	8-11/16 in. (220 mm)	9-21/32 in. (245 mm)	13-5/16 in. (338 mm)	15-3/16 in. (385 mm)	17-15/32 in. (443 mm)	19-11/16 in. (500 mm)
Flange (D)	51/64 in. (20 mm)	25/32 in. (20 mm)	5/8 in. (16 mm)	3/4 in. (19 mm)	13/16 in. (21 mm)	7/8 in. (22 mm)	1 in. (25 mm)	1-1/16 in. (27 mm)	1.26 in. (32 mm)
Bolt Circle (E)	4 in. (102 mm)	4-1/2 in. (114 mm)	4-3/4 in. (121 mm)	6 in. (152 mm)	7-1/2 in. (191 mm)	9-1/2 in. (241 mm)	11-3/4 in. (298 mm)	14-1/4 in. (362 mm)	17 in. (432 mm)
Centerline (F)	1-27/32 in. (47 mm)	2-1/16 in. (52 mm)	2-5/8 in. (67 mm)	3-11/32 in. (85 mm)	4-5/16 in. (109 mm)	5-1/4 in. (133 mm)	6-3/8 in. (162 mm)	7-7/8 in. (199.4 mm)	8-7/8 in. (226 mm)

PHYSICAL DIMENSIONS OF METERS WITH INTEGRAL STRAINER

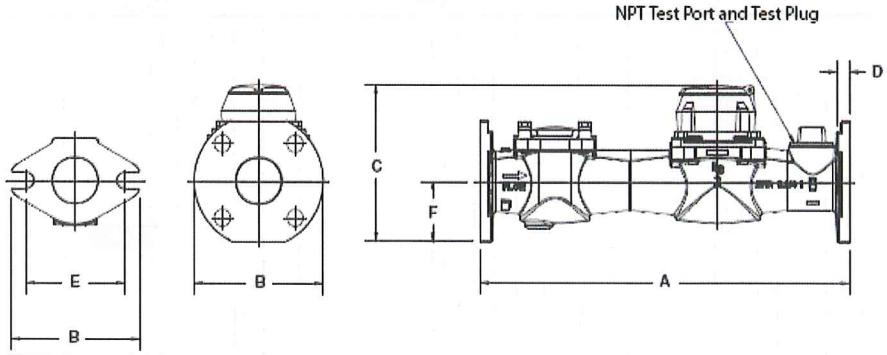

Figure 2: Physical dimensions

Turbo Series Model	160	200	200	450	1000
Meter Flanges	Elliptical	Elliptical	Round	Round	Round
Meter & Pipe Size	1-1/2 in. (40 mm)	2 in. (50 mm)	2 in. (50 mm)	3 in. (80 mm)	4 in. (100 mm)
Net Weight	14.3 lb (6.5 kg)	24 lb (11 kg)	26 lb (12 kg)	49 lb (22 kg)	60 lb (27.22 kg)
Shipping Weight	16.8 lb (7.6 kg)	28 lb (13 kg)	30 lb (14 kg)	55 lb (25 kg)	70 lb (31.75 kg)
Number of Bolts	2	2	4	4	8
NPT Test Port & Test Plug (Standard)	1 in. (25.4 mm)	1-1/2 in. (40 mm)	1-1/2 in. (40 mm)	2 in. (50 mm)	2 in. (50 mm)
Length (A)	13 in. (330 mm)	17 in. (432 mm)	17 in. (432 mm)	19 in. (483 mm)	23 in. (584 mm)
Width (B)	5-7/32 in. (133 mm)	5-27/32 in. (148 mm)	6 in. (152 mm)	7-1/2 in. (191 mm)	9 in. (229 mm)
Height (C)	6-9/32 in. (159 mm)	6-1/2 in. (165 mm)	7-3/32 in. (180 mm)	8-15/16 in. (227 mm)	9-21/32 in. (245 mm)
Flange (D)	51/64 in. (20 mm)	27/32 in. (47 mm)	5/8 in. (16 mm)	27/32 in. (21 mm)	13/16 in. (21 mm)
Bolt Circle (E)	4 in. (102 mm)	4-1/2 in. (114 mm)	4-3/4 in. (121 mm)	6 in. (152 mm)	7-1/2 in. (191 mm)
Centerline (F)	1-27/32 in. (47 mm)	2-1/16 in. (52 mm)	2-5/8 in. (67 mm)	3-19/32 in. (91 mm)	4-5/16 in. (109 mm)

PRESSURE LOSS CHART FOR METERS WITHOUT STRAINER

Rate of flow in gallons per minute (gpm)

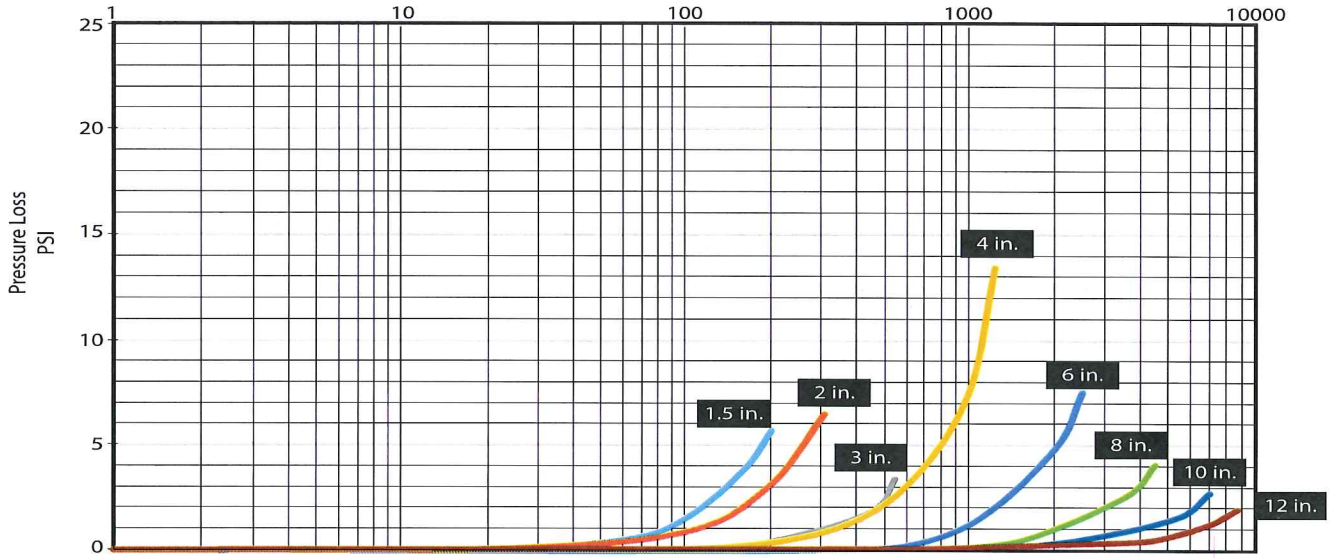

PRESSURE LOSS CHART FOR METERS WITH INTEGRAL STRAINER

Rate of flow in gallons per minute (gpm)

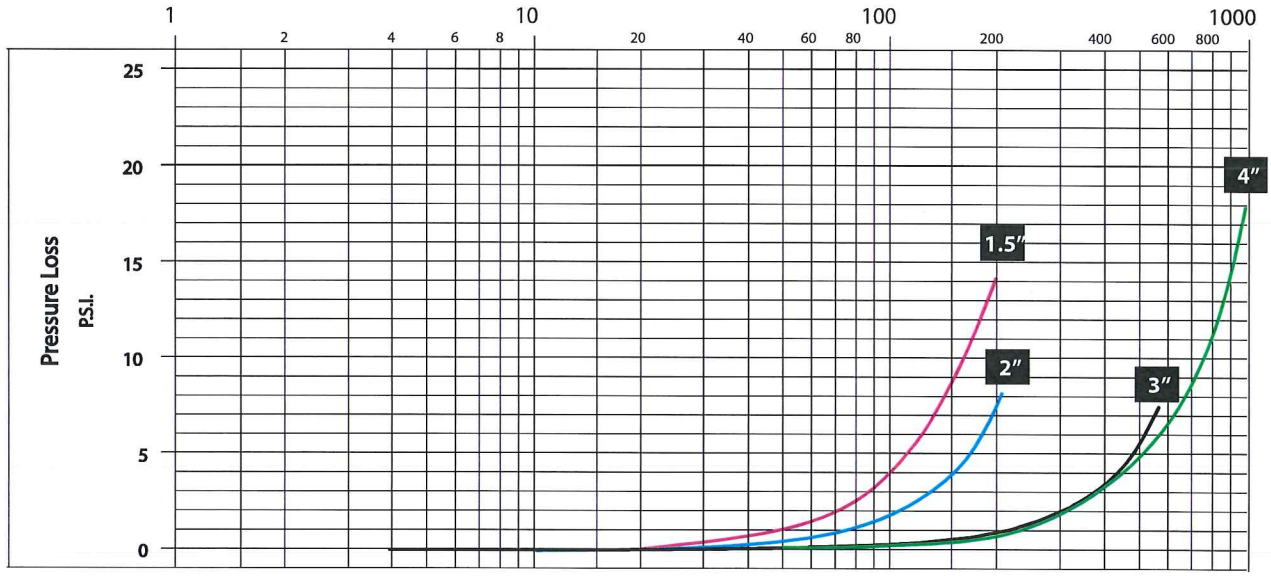

ACCURACY CHARTS FOR METERS WITHOUT STRAINER

Rate of flow in gallons per minute (gpm)

1-1/2 in. Meter

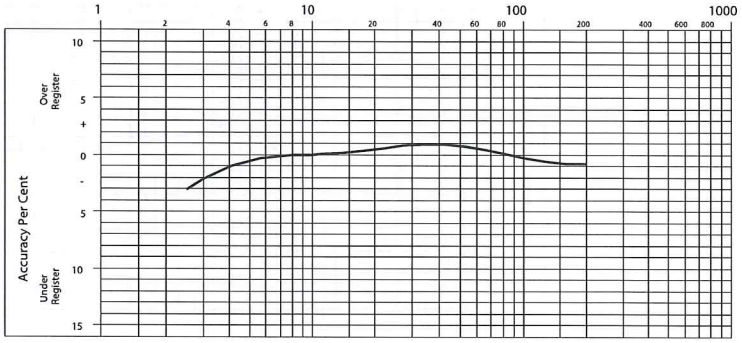

2 in. Meter

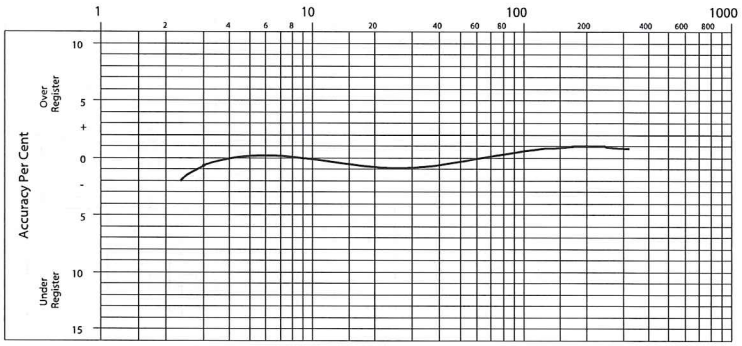

3 in. Meter

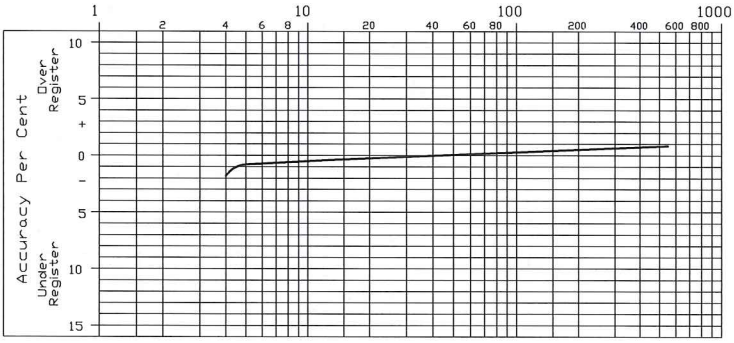

4 in. Meter

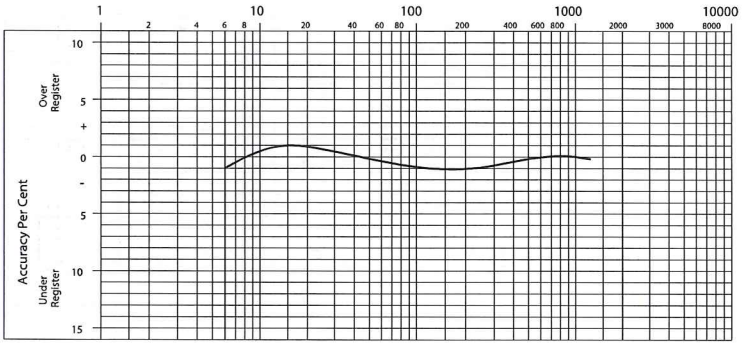

ACCURACY CHARTS FOR METERS WITHOUT STRAINER (CONTINUED)

Rate of flow in gallons per minute (gpm)

6 in. Meter

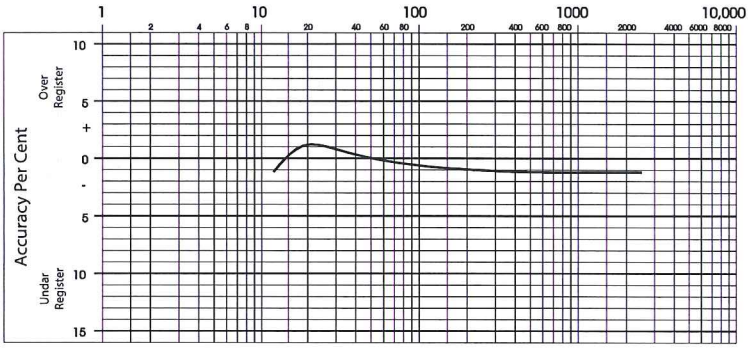

8 in. Meter

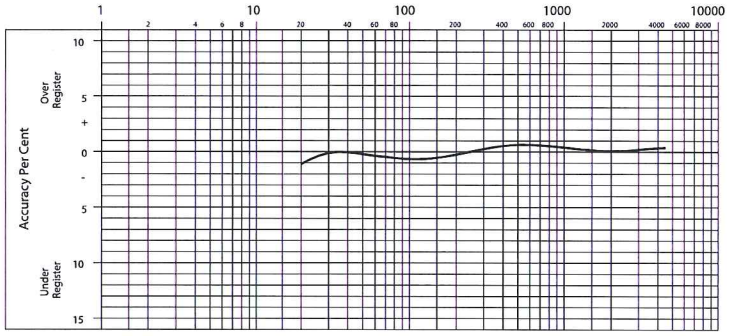

10 in. Meter

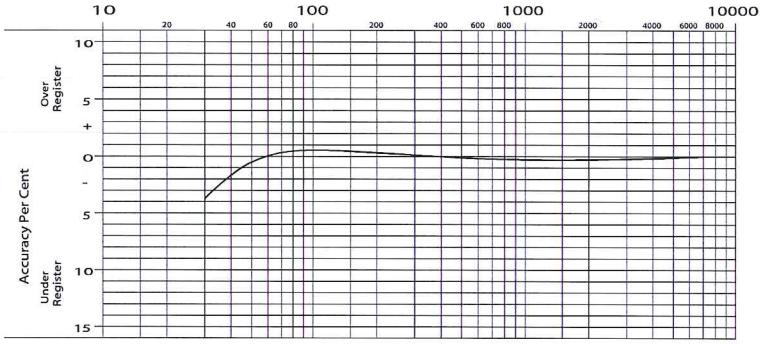

12 in. Meter

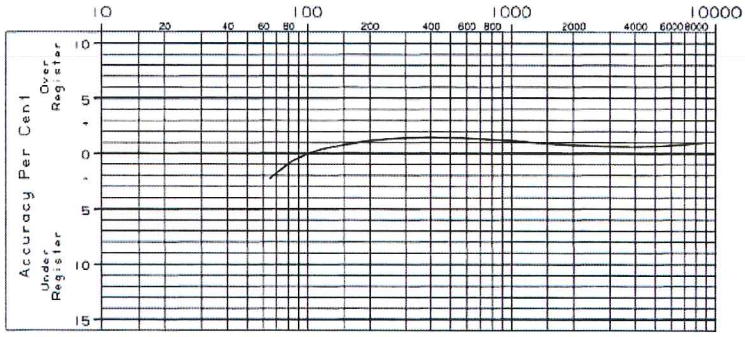

ACCURACY CHARTS FOR METERS WITH INTEGRAL STRAINER

Rate of flow in gallons per minute (gpm)

1-1/2 in. Meter

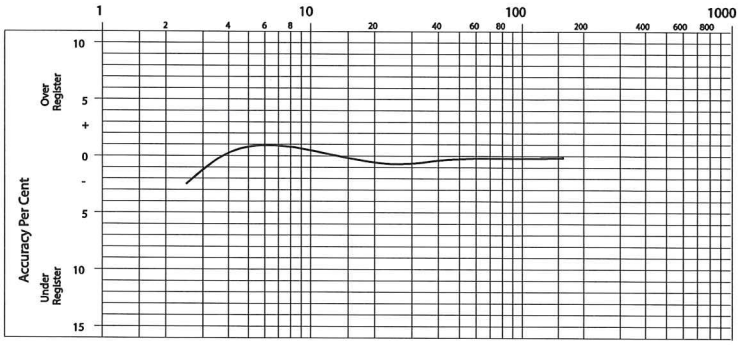

2 in. Meter

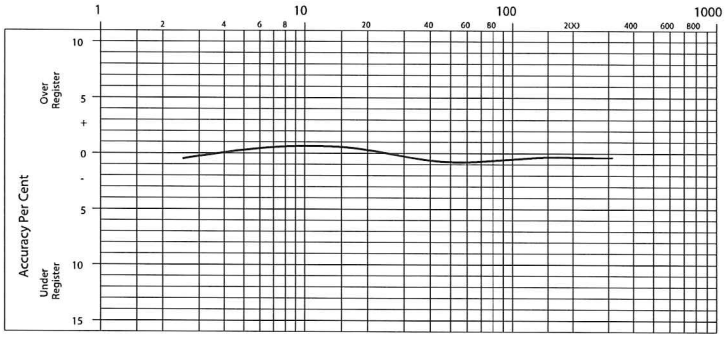

3 in. Meter

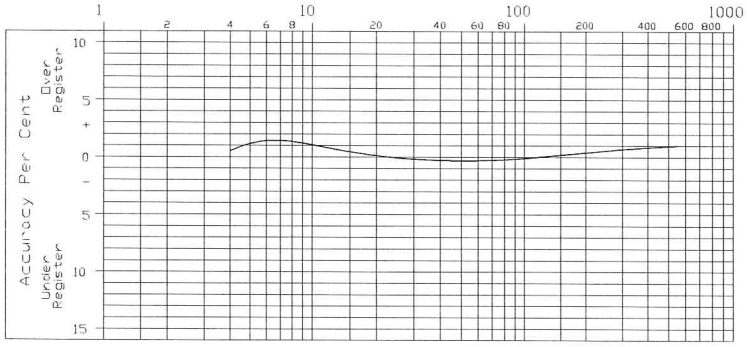

4 in. Meter

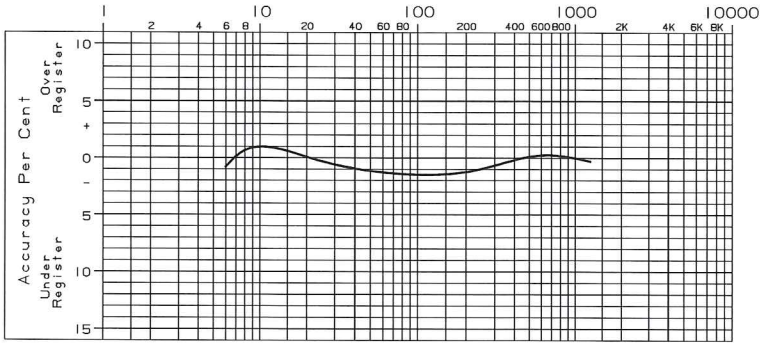

Dwyer

SERIES WMT2

MULTI-JET WATER METER WITH PULSED OUTPUT

Economical, Brass Body, Dry Dial, Pulsed Output

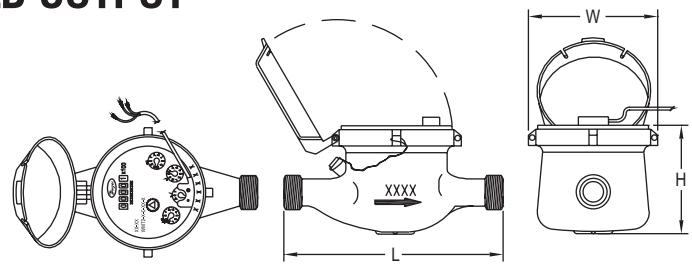

Size in (mm)	Spud NPSM (BSPP)	Length 'L' in (mm)	Width 'W' in (mm)	Height 'H' in (mm)	Weight lb (kg)
5/8 x 1/2 (15)	3/4″ (3/4″)	6-1/2 (165)	3-45/64 (94)	4-15/64 (107.5)	3.75 (1.7)
5/8 x 3/4	1″ (1″)	7-1/2 (190)	3-45/64 (94)	4-15/64 (107.5)	3.97 (1.8)
3/4 (20)	1″ (1″)	7-1/2 (190)	3-45/64 (94)	4-15/64 (107.5)	4.9 (2.2)
1 (25)	1-1/4″ (1-1/4″)	10-1/4 (260)	3-55/64 (98)	4-5/8 (117.5)	6.4 (2.9)
1-1/4 (32)	1-1/2″ (1-1/2″)	10-1/4 (260)	3-55/64 (98)	4-5/8 (117.5)	8.2 (3.7)
1-1/2 (40)	2″ (2″)	11-13/16 (300)	4-51/64 (122)	5-9/16 (141.5)	13.52 (6.17)
2 (50)	2-1/2″ (2-1/2″)	11-13/16 (300)	5-45/64 (145)	6-31/32 (177)	18.74 (8.5)

The **Series WMT2 Multi-Jet Water Meter with Pulsed Output** is a series of mechanical, water totalizing meters that display the total water usage in gallons or m^3 and provide a reed switch output proportional to flow rate. They are available in a range of body sizes and include NPT or BSPT couplings.

FEATURES/BENEFITS

- Multi-jet design allows for simplicity and accuracy with wide flow ranges, even in low flow applications
- Magnetically driven, hermetically sealed register does not leak or fog and is completely separated from the water
- Designed for long service life and maintenance-free operation, even under harsh conditions
- Integral strainer that protects meter from particulate damage
- Easy installation with included coupling adapters
- Pulsed output proportional to flow allows for remote flow totalization

APPLICATIONS

- Irrigation
- Cooling systems
- Filtration systems
- Water monitoring

SPECIFICATIONS

Service: Water.
Wetted Materials: Body: Brass, polyethylene; Couplings: Brass; Measuring chamber: Polyethylene, ABS plastic, ferrite, acetal.
Flow Range: See model chart.
Accuracy: Transitional flow: ±5%; Nominal flow: ±2%.
Temperature Limit: 104°F (40°C).
Pressure Limit: 232 psi (16 bar).
Totalizing Display Maximum: See model chart.
Output Signal: Pulse output with frequency proportional to flow rate.
Pulse Options: 0.1 gal, 1 gal, 10 gal, 100 gal per pulse (1 L, 10 L, 100 L per pulse).
Electrical Rating: 0.01 A @ 24 VAC/DC.
Electrical Connections: Color-coded lead wires, 4.5´ (1.5 m) long.
Mounting Orientation: Horizontal with the register face pointing up.
Weight: See dimension chart.

MODEL CHART

Model	Size	Coupling Size	Max Flow GPM (Gallons Per Minute)	Nominal Flow Range GPM (Gallons Per Minute)	Transitional Flow GPM (Gallons Per Minute)	Display Max (Gallons)	Pulse Rate (Gal./Pulse)
WMT2-A-C-01	5/8 x 1/2″	1/2″ NPT	20	1 to 10	0.25	9,999,999.99	0.1
WMT2-A-C-02	5/8 x 3/4″	3/4″ NPT	20	1 to 20	0.25	9,999,999.99	0.1
WMT2-A-C-03*	3/4″	3/4″ NPT	30	2 to 30	0.25	9,999,999.99	0.1
WMT2-A-C-04	1″	1″ NPT	50	3 to 50	0.75	99,999,999.9	0.1
WMT2-A-C-01-1	5/8 x 1/2″	1/2″ NPT	20	1 to 10	0.25	9,999,999.99	1
WMT2-A-C-02-1	5/8 x 3/4″	3/4″ NPT	20	1 to 20	0.25	9,999,999.99	1
WMT2-A-C-03-1*	3/4″	3/4″ NPT	30	2 to 30	0.25	9,999,999.99	1
WMT2-A-C-04-1	1″	1″ NPT	50	3 to 50	0.75	99,999,999.9	1
WMT2-A-C-06-10	1-1/2″	1-1/2″ NPT	100	5 to 100	1.5	99,999,999.9	10
WMT2-A-C-07-10	2″	2″ NPT	160	8 to 160	2	99,999,999.9	10
WMT2-A-C-04-100	1″	1″ NPT	50	3 to 50	0.75	99,999,999.9	100
WMT2-A-C-07-100	2″	2″ NPT	160	8 to 160	2	99,999,999.9	100

*Does not include inlet filter.

MODEL CHART

Model	Size	Coupling Size	Max Flow m^3/h	Nominal Flow Range m^3/h	Transitional Flow m^3/h	Display Max (m^3/h)	Pulse Rate (L/Pulse)
WMT2-B-C-08-1	15 mm	1/2″ BSPT	3	0.12 to 1.5	0.03	99,999.9999	1
WMT2-B-C-10-1*	20 mm	3/4″ BSPT	5	0.2 to 2.5	0.05	99,999.9999	1
WMT2-B-C-11-1	25 mm	1″ BSPT	7	0.25 to 3.5	0.07	99,999.9999	1
WMT2-B-C-12-1	32 mm	1-1/4″ BSPT	12	0.48 to 6	0.12	99,999.9999	1
WMT2-B-C-08-10	15 mm	1/2″ BSPT	3	0.12 to 1.5	0.03	99,999.9999	10
WMT2-B-C-12-10	32 mm	1-1/4″ BSPT	12	0.48 to 6	0.12	99,999.9999	10
WMT2-B-C-14-10	50 mm	2″ BSPT	30	1.2 to 15	0.3	999,999.9999	10
WMT2-B-C-12-100	32 mm	1-1/4″ BSPT	12	0.48 to 6	0.12	99,999.9999	100
WMT2-B-C-14-100	50 mm	2″ BSPT	30	1.2 to 15	0.3	999,999.9999	100

*Does not include inlet filter.

USA: California Proposition 65
⚠WARNING: Cancer and Reproductive Harm - www.P65Warnings.ca.gov

Most Comprehensive Offering for HVAC Applications

Butterfly Valve

BELIMO

The Belimo Advantage

Butterfly Valves are fundamental components in large hydronic systems. Unfortunately, most butterfly valves are less than ideal – they leak, their running times are not optimized for HVAC applications, they are heavy, it's hard to access wiring, and they cannot be put into operation quickly.

Belimo's butterfly valve series are the exception; with a complete range of resilient seat, grooved, and high-performance butterfly valve assemblies, sizes from 2" to 24", and variety of actuator control signal inputs to meet all your needs. Belimo assemblies offer zero leakage along with NEMA 2 or 4X rated actuator enclosures, designed to provide ease of installation, application flexibility, longevity, and reliability. Fail-safe actuators are available on butterfly valves up to 12" for emergency control sequences. Typical applications include chiller and boiler isolation, cooling tower isolation, summer/winter change-over control, large air handler coil control and primary bypass to maintain minimum water flow to a chiller or boiler plant.

Resilient Seated Butterfly Valves Efficient Solution

Belimo HD/L series lug resilient seated butterfly valves are designed to meet the needs of HVAC and commercial applications requiring zero leakage. The large Cv values provide an economical control valve solution for larger flow applications used in ANSI flanged piping systems. The technologically advanced L series butterfly valve assembly is designed specifically for HVAC applications; it offers an intelligent, energy efficient, and reliable high flow solution with a focus on ease of installation, application flexibility, and longevity.

- Manual handles available for isolation applications
- Saves energy with up to 80% less power consumption with PR/PKR actuator than currently available solutions
- Zero leakage improves system performance with self-adjusting actuator close-off and unique seat and disc design ensures positive valve sealing while maintaining low seating torque on 2-way models
- Easy troubleshooting with the PR/PKR unique position indicator, viewable from long distances and any angle
- Elongated valve neck provides thermal isolation to reduce heat transfer and condensation build-up on the actuator
- EPDM valve liner provides superior close-off and lower torque requirements

Sizes: 2" to 24" (2-way & 3-way)
ANSI 125/150 flange design
Stainless steel disc and stem standard
Ductile iron ASTM A536
Close off up to 200 psi
Media temp -22°F to 250°F [-30°C to 120°C]

Grooved Butterfly Valves Quick and Easy Connections without Welding

Grooved Victaulic butterfly valve series are engineered and manufactured for dependable, trouble-free performance offering superior flow control and durable, long-lasting reliability. The unique design of the offset disc provides increased flow with a longer life expectancy than most conventional valves, due to the tapered disc engaging the seat only at the beginning or end of the stroke.

- No welding is required making it a perfect retrofit solution for buildings where welding is not allowed
- Quick and easy connections with fewer bolts to tighten and no loose parts offering faster installation
- Full bi-directional shut-off and dead-end service capabilities to the full pressure rated up to 300 psi
- Cartridge style seat incorporates an elastomer bonded to a phenolic stabilizing ring, eliminating elastomer movement and reducing seat tearing or fatiguing due to bunching
- Five bushing design completely isolates the valve shaft from the body, resulting in increased control of the valve disc, lower valve seating torque, and longer valve life

Sizes: 2” to 12” (2-way & 3-way)
Grooved ANSI / AWWA (C606)
Electrolysis nickel coated disc and stainless steel stem
Ductile iron ASTM A536, 300-pound body
Close off 200 psi (for most combinations)
Media temp -22°F to 250°F [-30°C to 120°C]

High-Performance Butterfly Valves Precise Control for High-Velocity Applications

SHP butterfly valve assemblies are designed for high-performance shut-off, modulating and isolation service. The machined seat design and blow out proof solid shaft provides better torque consistency which results in longer actuator life and leakage rating Class IV per ASME FCI 70-2. Designed for use in ANSI Class 150 and ANSI Class 300 piping systems and supplied standard lug style body designs with range abilities of 100:1, 0% leakage ratings, and a maximum valve velocity of 32 FPS. Configurations are available for harsh conditions and applications requiring nominal pressure and temperature ratings.

- Underbody seat and double offset, disc design ensures positive valve sealing to ensure leak free performance
- Machined seat design and blow out proof solid shaft provides better torque consistency
- Steam service to 50 psi inlet pressure
- Unique seat and disc design provides bi-directional bubble-tight shutoff at rated pressure/temperatures
- Soft seat design ensures self-energized seal with minimal wear
- Full lug body design cast in carbon steel for superior performance

Sizes: 2” to 30” (2-way & 3-way)
ASME/ANSI 150 or ASME/ANSI 300
Stainless steel disc and stainless steel stem
Carbon steel full lug
Close off 285 or 600 psi
Media temp -22°F to 400°F [-30°C to 200°C]

Intelligent Butterfly Valve Assemblies

The resilient seated, grooved, and high-performance butterfly valve with PR actuator series are designed specifically to meet the needs of HVAC applications requiring zero leakage. The assemblies provide simplified setup, diagnostics and superior application data access with BACnet and Near Field Communication built-in.

Configuration		Size		Resilient Seat		Grooved		High Performance	
		Inches	DN	Non Fail-Safe	Fail-Safe	Non Fail-Safe	Fail-Safe	Non Fail-Safe	Fail-Safe
2-Way	3-Way	2	50	■	■	■	■	■	■
		2½	65	■	■	■	■	■	■
		3	80	■	■	■	■	■	■
		4	100	■	■	■	■	■	■
		5	125	■	■	■	■	■	■
		6	150	■	■	■	■	■	■
		8	200	■	■	■		■	
		10	250	■	■	■		■	
		12	300	■	■	■		■	
		14	350	■	■			■	
		16	400	■	■			■	
		18	450	■	■			■	
		20	500	■	■			■	
		24	600	■	■			■	

■ Available with PR and or PKR actuation offering:

- 100% duty cycle rating for increased actuator life
- Saves energy with up to 80% less power consumption and reduces transformer and wiring costs
- Self-adjusting close-off design provides zero leakage and improves system performance
- Industry leading fail-safe function and universal power supply input 24-240 VAC / 24-125 VDC provides application flexibility
- Unique position indication is viewable from long distances and any angle for easy troubleshooting
- BACnet and NFC provide simplified setup and diagnostics, as well as superior application data access

5 YEAR WARRANTY · GLOBAL SUPPORT · TESTED QUALITY · ON TIME DELIVERY · EXTENSIVE SERVICE

Belimo Americas

USA, Latin America, and the Caribbean: www.belimo.us
Canada: www.belimo.ca
Brazil: www.belimo.com.br

Belimo Worldwide: www.belimo.com

BELIMO®

PF_42 - 01/18 - Subject to change. © Belimo Aircontrols (USA), Inc.

S-Flex Enclosed Drive

The best drive for commercial pump and fan applications.

Make the most of your energy℠

Schneider Electric

>100 years

For more than 100 years the Square D™ brand has been known for the most reliable electrical products. Our industry-leading electrical expertise and commitment to quality, fuels our passion for drives. The S-Flex™ enclosed drive, designed with input from HVAC consultants and contractors, was developed specifically for commercial pump and fan applications, providing the most effective solution with the quickest payback.

Save Time

Save Money

Save Space

Think Green

Save time

Because specifying drives can be time consuming, the S-Flex drive includes the most common requirements in HVAC specifications for pump and fan applications, such as:

- Simple start-up including preprogrammed parameters for pump and fan applications
- Windows-based PCSoft software that allows you to:
  - Adjust parameters
  - Store and transfer drive configuration files
  - Monitor drive performance, including historical data
  - Configure, adjust and control remotely
  - Store drive configuration programs
- Quick installation with EZ-M mounting
- Easy wiring conduit knock-outs on the enclosure
- Dedicated wiring terminal block
- Stock availability so that the S-Flex drive is ready when you are

Save money

Offering unmatched value in installed cost and functionality, the S-Flex drive allows building owners, consulting engineers and contractors to focus on the essentials of demanding commercial building applications.

More than dollars and cents, you'll save with:

- Industry-leading reduced harmonic technology – eliminating the need for line reactors and DC chokes
- Energy savings – designed with energy economizing motor algorithms that maximize energy savings by reducing electricity usage
- Internal PID regulator – allowing flow rates to be adjusted for actual needs without additional hardware
- Reduced equipment maintenance cost and downtime
- 24/7 live technical support

Save space

The most slender design in the Flex drive family, the S-Flex enclosed drive offers a compact product with just the right features for most HVAC applications. When space is a concern, we've got you covered with:

- Slender design for minimal wall space
- Minimal space requirements between drives for side-by-side wall mounting
- Retrofitting of HVAC systems in existing mechanical rooms

Think green

The S-Flex enclosed drive assists with Leadership in Energy and Environmental Design (LEED™) certification. Green buildings enhance occupant comfort and health, decrease vacancy rates, increase building valuation, and improve the bottom line by reducing operating costs. A building that runs smoothly ensures comfortable tenants and comfortable tenants mean less vacancy.

Going green with the S-Flex drive offers:

- Building owners the ability to take advantage of state and local government energy incentives
- More marketable buildings to tenants seeking energy efficient/sustainable facilities
- Retrofitting to existing systems
- The most efficient method of partial load control

Industry-leading reduced harmonic technology (RHT)

The S-Flex drive revolutionizes harmonic mitigation with its innovative reduced harmonic technology. Significant harmonic reduction is achieved within the diode capacitor and power conversion section of the variable frequency drive, eliminating the need for a line reactor or bus reactor, which results in:

- Higher equipment efficiency
- Reduced equipment cost
- Fewer points of electrical failure
- Smaller enclosure size
- Lighter weight

Harmonics can be present in voltage, current or both. Any power source that converts AC to DC can generate harmonics. Typical sources include:

- Office equipment
- Computers
- Medical equipment
- Microprocessors
- Uninterruptible power supplies
- Fluorescent lamp ballasts

Harmonic currents do not add additional power to the electrical system, but additional current flows through electrical wires. Effects may include:

- Overheating of electrical distribution system wiring
- Shortened transformer life
- Decreased power factor
- Disturbance of power measuring systems

- ☑ Horsepower range:
  - 1–40 hp at 208 Vac and 230 Vac
  - 1–100 hp at 460 Vac
- ☑ Built-in EZ-M mounting feature for quick and easy parallel alignment and mounting
- ☑ S-Flex drive uses an Altivar™ 212 drive power converter with reduced harmonic technology and IGBT inverter with pulse width modulated output
- ~~☑ Optional LCD text keypad~~
- ☑ Built-in Modbus™, BaCnet, Metasys N2, Apogee P1 communication capability and options for LonWorks
- ☑ Programming and diagnostics in plain English with PCSoft Superscript™ software
- ☑ Adjustable frequency controller (AFC) – off – bypass selector switch
- ☑ Optional drive input disconnect switch provides an input line power disconnect switch between the main power disconnect and the power converter
- ~~☑ Optional line contactor provides an electrically interlocked line contactor between the main power disconnect and the power converter~~
- ☑ Power-on mode red LED indicator
- ☑ Bypass mode green LED indicator
- ☑ Terminal block for customer's control connections terminal block
- ~~☑ Full voltage bypass contactors~~
- ☑ 100 kAIC UL 508C rating and full voltage bypass
- ☑ Square D circuit breaker for disconnect and over current protection
- ☑ Hinged door with latches for quick and easy interior access
- ☑ Conduit knockouts on bottom of enclosure for quick and easy wiring

Selection guide

The enclosed drive catalog number, located on the nameplate on the inside of the door, is coded to describe the configuration and options. Use the following table to translate the catalog number into a description of the enclosed drive.

460 V	HP	Full Load	Height		Width		Depth		Weight		Options
Catalog Number		A	in.	mm	in.	mm	in.	mm	lbs	kgs	
SFD212CG4Y	1	2.1	40.375	1025.5	8.714	221.3	7.895	200.5	52	23.587	~~A06 = BACnet~~ ~~B06 = LonWorks~~ ~~C06 = Metasys N2~~ ~~D06 = Apogee P1~~ ~~N06 = Modbus Monitoring~~ ~~W = Without Bypass~~ ~~Y = Full Voltage Bypass~~ A07 = Drive Input Disconnect Switch ~~B07 = Line Contactor~~ ~~D07 = LCD Text Keypad~~
SFD212DG4Y	2	3.4	40.375	1025.5	8.714	221.3	7.895	200.5	52	23.587	
SFD212EG4Y	3	4.8	40.375	1025.5	8.714	221.3	7.895	200.5	52	23.587	
SFD212FG4Y	5	7.6	40.375	1025.5	8.714	221.3	7.895	200.5	52	23.587	
SFD212GG4Y	7.5	11	40.375	1025.5	8.714	221.3	7.895	200.5	52	23.587	
SFD212HG4Y	10	14	40.375	1025.5	8.714	221.3	7.895	200.5	52	23.587	
SFD212JG4Y	15	21	40.375	1025.5	8.714	221.3	7.895	200.5	52	23.587	
SFD212KG4Y	20	27	45.142	1146.6	12.215	310.3	8.725	221.6	111	50.349	
SFD212LG4Y	25	34	45.142	1146.6	12.215	310.3	8.725	221.6	111	50.349	
SFD212MG4Y	30	40	62.006	1575.0	12.532	318.3	10.916	277.3	140	63.503	
SFD212NG4Y	40	52	62.006	1575.0	12.532	318.3	10.916	277.3	140	63.503	
SFD212PG4Y	50	65	62.006	1575.0	12.532	318.3	10.916	277.3	140	63.503	
SFD212QG4Y	60	77	62.006	1575.0	12.532	318.3	10.916	277.3	140	63.503	
SFD212RG4Y	75	96	64.900	1648.5	15.243	387.2	11.915	302.7	206	93.440	
SFD212SG4Y	100	124	64.900	1648.5	15.243	387.2	11.915	302.7	206	93.440	

230 V	HP	Full Load	Height		Width		Depth		Weight		Options
Catalog Number		A	in.	mm	in.	mm	in.	mm	lbs	kgs	
SFD212CG3Y	1	4.2	40.375	1025.5	8.714	221.3	7.895	200.5	52	23.587	A06 = BACnet B06 = LonWorks C06 = Metasys N2 D06 = Apogee P1 N06 = Modbus Monitoring W = Without Bypass Y = Full Voltage Bypass A07 = Drive Input Disconnect Switch B07 = Line Contactor D07 = LCD Text Keypad
SFD212DG3Y	2	6.8	40.375	1025.5	8.714	221.3	7.895	200.5	52	23.587	
SFD212EG3Y	3	9.6	40.375	1025.5	8.714	221.3	7.895	200.5	52	23.587	
SFD212FG3Y	5	15.2	40.375	1025.5	8.714	221.3	7.895	200.5	52	23.587	
SFD212GG3Y	7.5	22	40.375	1025.5	8.714	221.3	7.895	200.5	52	23.587	
SFD212HG3Y	10	28	40.375	1025.5	8.714	221.3	7.895	200.5	52	23.587	
SFD212JG3Y	15	42	45.142	1146.6	12.215	310.3	8.725	221.6	111	50.349	
SFD212KG3Y	20	54	45.142	1146.6	12.215	310.3	8.725	221.6	111	50.349	
SFD212LG3Y	25	68	45.142	1146.6	12.215	310.3	8.727	221.6	111	50.349	
SFD212MG3Y	30	80	62.006	1575.0	12.532	318.3	10.916	277.3	140	63.503	
SFD212NG3Y	40	104	64.900	1648.5	15.243	387.2	11.915	302.7	206	93.440	

208 V	HP	Full Load	Height		Width		Depth		Weight		Options
Catalog Number		A	in.	mm	in.	mm	in.	mm	lbs	kgs	
SFD212CG2Y	1	4.6	40.375	1025.5	8.714	221.3	7.895	200.5	52	23.587	A06 = BACnet B06 = LonWorks C06 = Metasys N2 D06 = Apogee P1 N06 = Modbus Monitoring W = Without Bypass Y = Full Voltage Bypass A0 = Drive Input Disconnect Switch B07 = Line Contactor LCD = Text Keypad D07 = LCD Text Keypad
SFD212DG2Y	2	7.5	40.375	1025.5	8.714	221.3	7.895	200.5	52	23.587	
SFD212EG2Y	3	10.6	40.375	1025.5	8.714	221.3	7.895	200.5	52	23.587	
SFD212FG2Y	5	16.7	40.375	1025.5	8.714	221.3	7.895	200.5	52	23.587	
SFD21GG2Y	7.5	24.2	40.375	1025.5	8.714	221.3	7.895	200.5	52	23.587	
SFD212HG2Y	10	30.8	40.375	1025.5	8.714	221.3	7.895	200.5	52	23.587	
SFD212JG2Y	15	46.2	45.142	1146.6	12.215	310.3	8.725	221.6	111	50.349	
SFD212KG2Y	20	59.2	45.142	1146.6	12.215	310.3	8.725	221.6	111	50.349	
SFD212LG2Y	25	74.8	45.142	1146.6	12.215	310.3	8.727	221.6	111	50.349	
SFD212MG2Y	30	88	62.006	1575.0	12.532	318.3	10.916	277.3	140	63.503	
SFD212NG2Y	40	114	64.900	1648.5	15.243	387.5	11.915	302.7	206	93.440	

Specifications

Electrical Specifications	
Input voltage	208 Vac ±10%, 230 Vac ±10%, 460 Vac ±10%
Displacement power factor	Approximately 0.96
Input frequency	60 Hz ±5%
Output voltage	Three-phase output, maximum voltage equal to input voltage
Galvanic isolation	Galvanic isolation between power and control (inputs, outputs and power supplies)
Frequency range of the power converter	0.1 Hz to 500 Hz (factory setting of 60 Hz maximum)
Current limit	150% of nominal drive full load amperage (FLA) for 60 s
Switching frequency	Selectable from 2 kHz to 16 kHz (1)
Speed reference	AI1: 0 V to +10 V, Impedance = 30 kOhms, AI3: 4 mA to 20 mA, Impedance = 250 kOhms 0 mA to 20 mA (reassignable, X–Y range with keypad display) Manual speed control via keypad
Frequency resolution in analog reference	0.1 Hz to 100 Hz (10 bits)
Speed regulation	V/f: determined by motor slip, typically 3% SLFV (sensorless flux vector): 1%
Efficiency	Typically greater than 95%
Inputs and outputs	3 Multi-function programmable Logic Inputs 2 Analog inputs; VIA (4 mA to 20 mA or 0 V to 10 V), VIB (0 V to 10 V) 1 Analog output; X mA to Y mA or 0 V to 10 V, software selectable 2 Assignable output relays; 1 fault relay, 1 assignable relay 1 RJ45 RS485 Modbus port
Acceleration and deceleration ramps	0.1 s to 999.9 s (adjustable in 0.1 s increments)
Motor protection	Class 10 and Class 20 overload protection with bypass in addition to controller internal electronic thermal protection
Keypad display	Self-diagnostics with fault messages in three languages. Also refer to instruction manual, 30072-451-61

Environmental Specification	
Storage temperature	-13° F to +158° F (-25° C to +70° C) with vent cover removed and without derating
Operating temperature	+14° F to +122° F (-10° C to +50° C)
Humidity	95% with no condensation or dripping water, conforming to IEC 60068-2-3
Altitude	3300 ft (100 m) maximum without derating; derate the current by 1% for each additional 330 ft (100 m)
Enclosure	Type 1
Pollution degree	Pollution degree 2 per NEMA ICS-1 and IEC 60664-1
Resistance to vibrations (power converter only)	According to IEC 60068-2-6: 1.5 mm zero to peak from 3 Hz to 13 Hz 1 g from 13 Hz to 150 Hz
Resistance to shocks (power converter only)	According to IEC 60068-2 15 g, 11 ms
Transit test to shock	Conforming to National Safe Transit Association and International Safe Transit Association test for packaging weighing 100 lbs or less
Codes and standards	UL listed per UL 508C as incorporating Class 10 and Class 20 electronic and electromechanical overload protection. Conforms to applicable NEMA ICS, NFPA, IEC and ISO 9001 standards

Accessories Catalog Numbers	
Modbus Cable for PCSoft	VW3A8106
EZ-M mounting channel, 72 in. length	EZM72MC
LonWorks communication card for field mounting	VW3A21312

Scan this code to check out the S-Flex price guide.

http://bit.ly/sflexpriceguide

Features

1 Keypad display for configuration and monitoring
- Optional LCD keypad

2 Through the door disconnect
- Electrical disconnect circuit breaker handle with electrical lock-out/tag-out

3 Front access selector and lights
- Adjustable Frequency Controller (AFC) – off – bypass selector switch
- Power-on mode red LED indicator
- Bypass mode green LED indicator

4 EZ-M channel mounting
- EZ-M mounting feature interface built into the enclosure makes parallel alignment of multiple drives quick and easy with an EZ-M mounting channel

5 Hinged NEMA 1 rated enclosure
- Hinged door for quick and easy interior access
- Run status LED

6 Conduit knockouts
- Conduit knockouts on bottom of enclosure for quick and easy wiring to line and load terminals and control wiring terminations

7 Short-circuit protection
- Square D circuit breaker offers electrical disconnect and over current protection
- 100,000 A interrupt current (AIC) fully coordinated current rating to UL 508C and NEMA ICS7.1

8 Bypass contactor or optional non-bypass contactor
- Full voltage bypass contactors with electrical interlocks allow for emergency full speed operation

9 Terminal block
- Easy customer control wiring interface with terminal block connections

Schneider Electric USA, Inc.

Automation and Control Center of Excellence
8001 Knightdale Boulevard
Knightdale, NC 27545
Tel: 919-266-3671

Schneider Electric Canada
19 Waterman Avenue
Toronto, ON M4B 1Y2
Tel: 1-800-565-6699

This document has been printed on recycled paper

©2011 Schneider Electric. All Rights Reserved. Schneider Electric, Make the most of your energy, Modbus, Altivar and Square D are trademarks owned by Schneider Electric Industries SAS or its affiliated companies. All other trademarks are the property of their respective owners. Part Number 998-4526

Document Number 8800BR1104

May 2011 er

Appendix D

Listing of SDB and SB Firms

Section will be finalized when project selections are completed and will meet or exceed RFQ proposal commitment.

Appendix E

Small Diverse Business and Small Business Letters of Intent

Section will be finalized when project selections are completed and will meet or exceed RFQ proposal commitment.

Appendix F

Entech Design Prints and Specifications

DESIGN DRAWINGS AND SPECIFICATIONS

ECM 3.1 Compressed Natural Gas Conversion

GESA – Houtzdale State Correctional Institute

ECM Scopes of Work

ECM 3a – Compressed Natural Gas Conversion

This conversion should occur early in the phasing to allow natural gas service to be available for any new boiler start-ups.
Exact phasing details will need to be coordinated during detailed design.
Provide all of the following:

1. Contact PA One-Call to locate all buried utilities. We will need to hire a private utility locating company to locate prison owned utilities.
2. Clear the lawn near truck staging for the improved CGN truck unloading area.
3. Construct the truck unloading area in accordance with Scope of Work / General Construction details provided by XNG (3 pages numbered 10, 11 and 12). Utilize the various sketches as a reference. Variations to the layout are acceptable.
4. Include: Additional bituminous paving with sub-base up to the gates, concrete pads for trailer parking within a gravel lot, fencing, electrical grounding grid, electrical service panelboard within a NEMA 3R enclosure, site lighting, etc, all as specified by XNG.
5. Piping from the trucks to the decompression skid as well as the decompression skid will be furnished by the gas supplier. We need to provide bollards at the rear of the trucks and pipe support piers for piping between the trucks and the decompression skid.
6. Provide one underground 4" HDPE gas pipe and three underground 2" PVC conduits from the improved truck unloading area to the Central Plant. The gas and conduits would typically be installed in separate parallel trenches each trench about 2' wide and 3' deep.
7. Provide one anodeless gas piping riser at each end of the HDPE gas piping. Bed and backfill around the gas piping with sand. Provide detectable underground warning tape and a locating wire above the gas line.
8. Provide detectable underground warning tape above each PVC conduit. Provide two handholes along each conduit length to assist in pulling wire and PVC junction boxes at each end of each conduit. One conduit will include a fiber-optic cable. One conduit will include 3#3 AWG & 1#8 GRD for the 60 amp service to the improved area (wire sizes are increased for voltage drop). One conduit will be a spare.
9. Backfill and compact trench. Restore improved surfaces. Restore topsoil and grass. Conduit route passes below 25' wide Institution Drive, a 12' wide rip-rap drainage trough, one 8' wide concrete walk to the Pump House, and gravel paving between the Central Plant and the Records Building.
10. Provide a flanged steel gas connection with shut-off valve from the decompression skid to the gas line in the trench (anodeless riser).
11. Provide a 4" lockable shut-off valve and two gas pressure regulators at the end of the gas piping at the Central Plant. Regulator should each be sized for 50,000 CFH from 50 psig inlet pressure to 10 +/- psig outlet pressure. Protect the valve and regulators with two pipe bollards. 4"

Schedule 40 welded steel piping will enter the Central Plant building under Scope Eb(1). Paint outdoor steel gas piping located above grade.

12. Extend the fiberoptic cable, in conduit, inside the Central Plant to the existing fiber patch panel (location unknown) and install Cat 6 cable from the patch panel to the computer hub in the Central Plant (location unknown). Coordinate with the IT Department for an IP Address.
13. Provide a new 2 pole, 60 A circuit breaker in an existing 120/208 volt panelboard and extend the 3#3 AWG & 1#8 GRD wiring to the trench, for the 60 amp electrical service to the truck unloading area.

Attachments: One 11 x 17 Truck Unloading and Trench Plan
XNG General Construction Scope of Work (3 pages + cover sheet)
Gas Unloading Plans (3 sheets)
Complete PDFs of the information furnished by XNG and CNG are available.

ECM 3a
Compressed
Natural Gas
Conversion

Scale: 1" = 100'

0 100 200

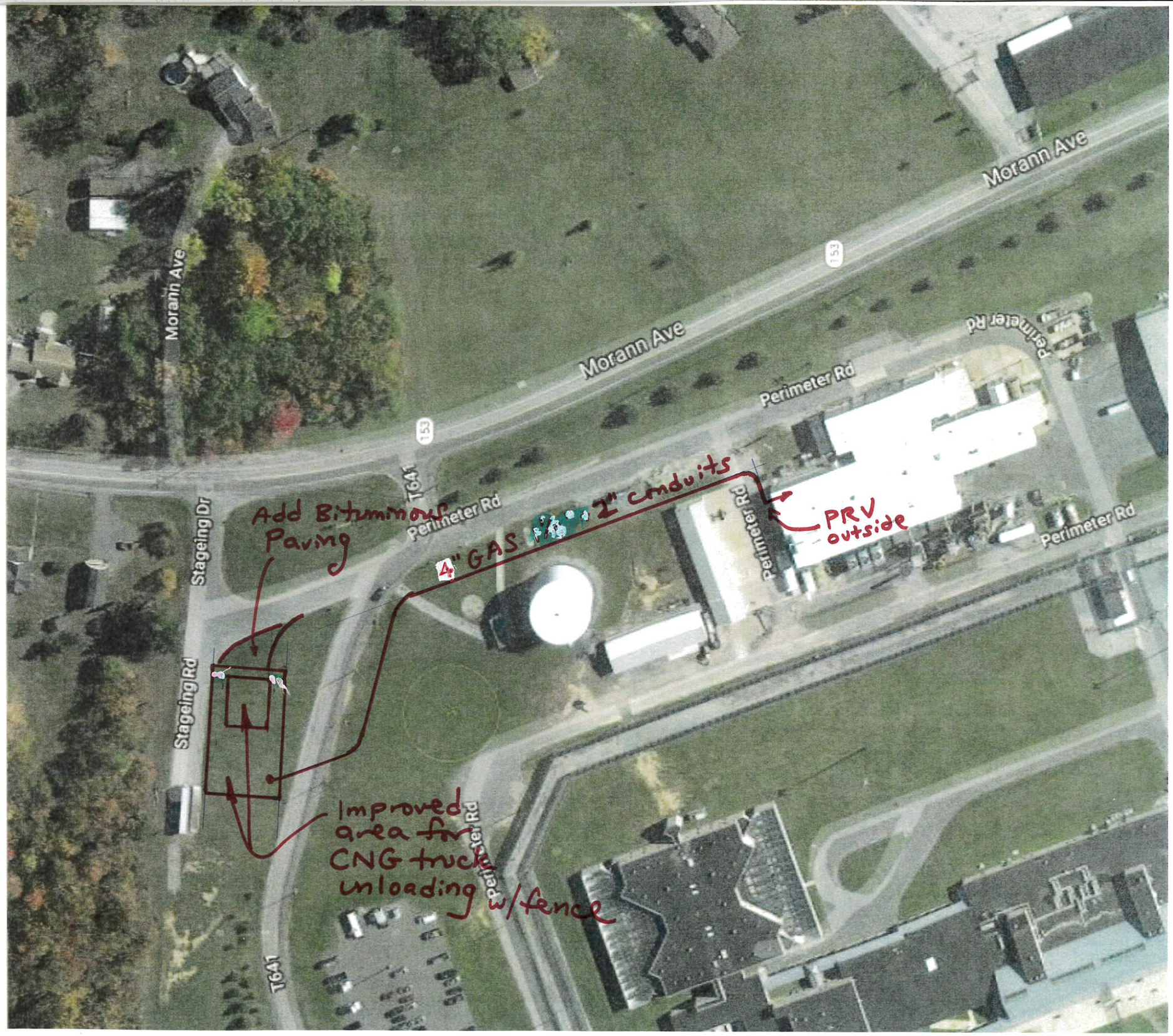

40.8142685,-78.3534667,400m/data=!3m1!1e3!4m5!3m4!1s0x89cc724b1bb10a23:0x35eeed6d2fddad5!8m2!3d4(

COMPRESSED NATURAL GAS SERVICE

Solution Overview

Questions and Answers

Prepared by

Xpress Natural Gas, LLC
300 Brickstone Square
Suite 1005
Andover, MA 01810

Please note this this document has been prepared in connection with consideration of CNG services, and may only be distributed only to those personnel and representatives that need this information in connection with such review.

3. Scope of Work / General Construction

Our construction management team has over 35 years experience with a wide range of gas installations, and we can provide any site design, engineering or construction services as needed.

The site would involve construction of a three-trailer unloading area where two trailer will be parked at all times. The drawing below illustrates a typical CNG decompression station layout, and the scope of work represented in this proposal.

XNG will work closely with you based on your construction and materials delivery schedules.

Summary of Work: This work represents the construction and equipment necessary to construct a gated fuel unloading station with space for three CNG trailers to be connected and disconnected. The scope includes all piping, electrical and data interfaces between the boiler plant and the XNG-provided decompression equipment at the fuel unloading station.

Site design, layout, electrical classification, etc. shall comply with NFPA 52.

The scope of work for the site construction for this project will cover:

1. Direct burial of 4" HDPE with minimum 3 - 2" electrical conduits, to include:

   - 1' of sand and will replace any gravel lost in excavation for parking lot base & paving (will match existing thickness of pavement up to 4 inches). 4" HDPE will be tested to 100 PSI.
   - Locate wire & caution tape will be installed with the installation of the gas service for proper locating (caution tape for electrical and gas).
   - All piping to support connection from the site to the service interconnection at the plant (boiler room or other point per plant management).
   - Piping to terminate at the CNG delivery site at a 4" metal flange (6-bolt pattern) raised 2' above concrete pad.

2. Trailer parking area.

   - Level paved trailer parking area large enough to accommodate 3 trailers with a minimum thickness of 24 inches of processed gravel installed in accordance with ASTM D1557
   - All concrete pads to be poured using 4,000 psi reinforced concrete with frost protection spread footing bearing on soil that can achieve a minimum of 1,500 psf
   - Install entrance "maneuvering area," turn around and parking area to provide adequate area for truck and trailer turn around.
   - Remove & dispose of trees & shrubs
   - Design of decompression site / trailer parking area per XNG site requirements
   - Installation of gravel pad, including road fabric, erosion control, seed, hay & fertilizer, and all gravel

- Light pole bases, poles and fixtures
- Conduit for lighting inside fenced in areas, including all fittings

Materials provided but not limited to:

- ¾" and 1½" gravel
- 4 concrete pads
    - 10'x12'x6" reinforced concrete pad for Decompression Skid equipment
    - 7'x12'x6" and 8'x10'x6" pads for supporting electrical/controls enclosure and required pre-heating equipment
    - 40'x4'x6" reinforced concrete landing gear area for trailer support
- Minimum 4 light pole bases, poles and fixtures (sufficient to provide lighting for the rear of the trailer – acceptable to provide lighting from existing sources if available, and motion-sensors are recommended)
- Conduit for lighting using 1" PVC
- 3 trailer stop barriers
    - All truck parking lanes must have trailer stops installed that are capable to stopping a fully loading CNG trailer.
- Pipe bollards.
    - Each trailer parking lane must have concrete spots for mounting off load piping. All concrete pipe supports will be placed on soil that can withstand 1,200 psf and will be installed below the frost line. Spacing will not exceed eight feet of piping unsupported in any direction.
- Paved area 60'X40' w/ 2" binder (approx 500 sy area, 2.5" base, 1.5" surface)
    - Vendor should make reasonable allowance for additional asphalt for maneuvering area, if required.
    - Asphalt paving to be installed in accordance with state DOT specifications.

3. Fencing. Fencing is installed to restrict access to the decompression equipment, and can be extended to include parked trailers. Decompression equipment must be secured with a 6' tall security fence and each trailer lane must have a minimum twelve foot wide lockable gate with a Knox box for Fire Department access

   All fencing is to be installed with the following specifications:

    - All materials to be galvanized steel
    - All fence fabric to be #9 Gauge
    - All line posts to be driven, 2-1/2" O.D. Posts
    - All End, Corner and Walk Gate Posts to be 3" O.D. Posts set in concrete footings
    - All Fencing to have 1-5/8" Top Rail and #7 Gauge Bottom Tension Wire
    - All Ends and Corners to have 1-5/8" Braces with 3/8" Truss Rods.

- Fencing must include at a minimum 6' all-galvanized chain link fence enclosure to enclose CNG equipment, with at least one 6' walk gate.

- Optional: Customer may elect to solicit bids (materials and labor) for privacy slats or other types of fencing
- Optional: Customer may elect to solicit bids (materials and labor) for fencing to enclose CNG trailer parking area. Scope of work would typically include minimum 12' (preference 16') wide gates for each trailer entrance. Double gate posts are to be 6-5/8" O.D. posts set in concrete footings.
- Optional: Jersey barriers to be used in lieu of fencing if facility is not fenced entirely.

4. Electrical grounding grid. ¾" copper ground wire installed such that it surrounds the pad, is grounded to the rebar in the pad, and is connected to a 8' grounding rod on each corner.

5. Electrical service. 60 amp, 120/208V electrical service provided to the electrical enclosure, and to support lighting installation.
   - Provide sufficient lighting in the process area/piping manifold to allow safe connection/disconnection of trailers, viewing of process area, and snow removal.
   - Lighting also required in area of trailer kingpin area to allow safe verification of trailer connection to tractor and snow removal.

6. Data service. Internet service required for remote monitoring.
   - Hard-wired internet service to the PLC controller
   - CNG-to-customer control interface (< 300' = Cat 5e or Cat 6, > 300' = fiber optic)

   Optional: Customer may elect to consider cameras or additional monitoring equipment.

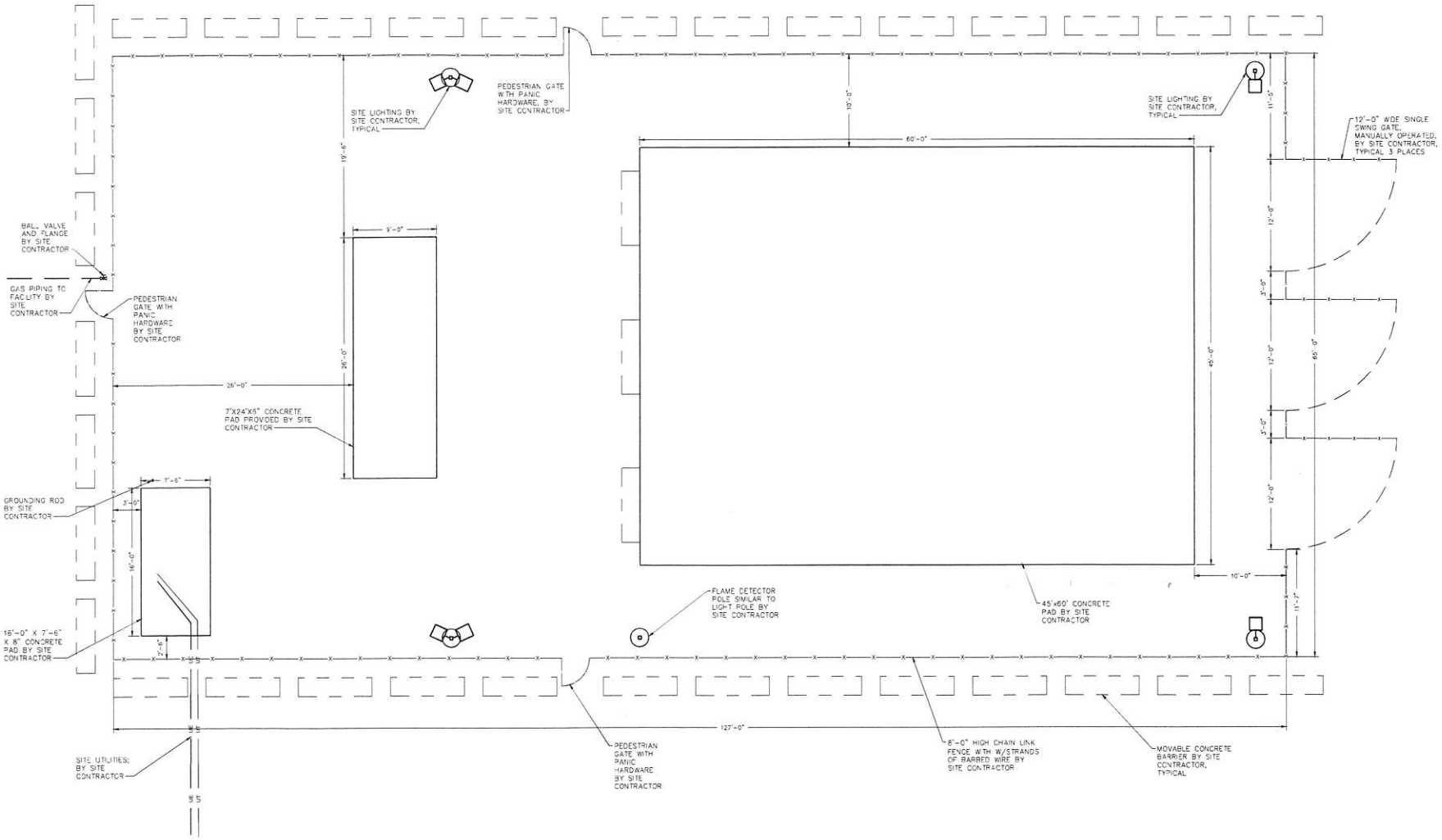

NOTES:

1. SITE CONTRACTOR TO PROVIDE SITE LIGHTING, FENCING, EQUIPMENT PADS, AND TRAILER PARKING SITEWORK.

PROPOSED SITE WORK BY SITE CONTRACTOR

SCALE: 3/16" = 1'-0"

NO.	DATE	REVISION

FOR RETTEW ASSOCIATES BY:

MANAGER: PAT WALKO
DESIGN BY: CMO
CHKD BY: P WALKO
DRAWN BY:
CHKD BY:
SURV. CHIEF: N/A
FIELDBOOK NO. N/A

CLIENT
COMPASS NATURAL GAS PARTNERS, LP
1215 MANOR DRIVE, SUITE 302
MECHANICSBURG, PA 17055

SCALE
3/16"=1'-0"

RETTEW.
RETTEW Associates, Inc.
5031 Richard Ln, Ste 111, Mechanicsburg, PA 17055
Phone (717) 697-3551 Fax (717) 697-8953
Email: rettew@rettew.com
Website: www.rettew.com
Engineers • Planners • Surveyors • Landscape Architects
Environmental Consultants

COMPASS NATURAL GAS
FOR
SCI HOUTZDALE
SITE PLAN - BY SITE CONTRACTOR

PROJ. NO. 100052036
DWG. NO. C-03

NOT FOR CONSTRUCTION/NOT FOR BIDDING

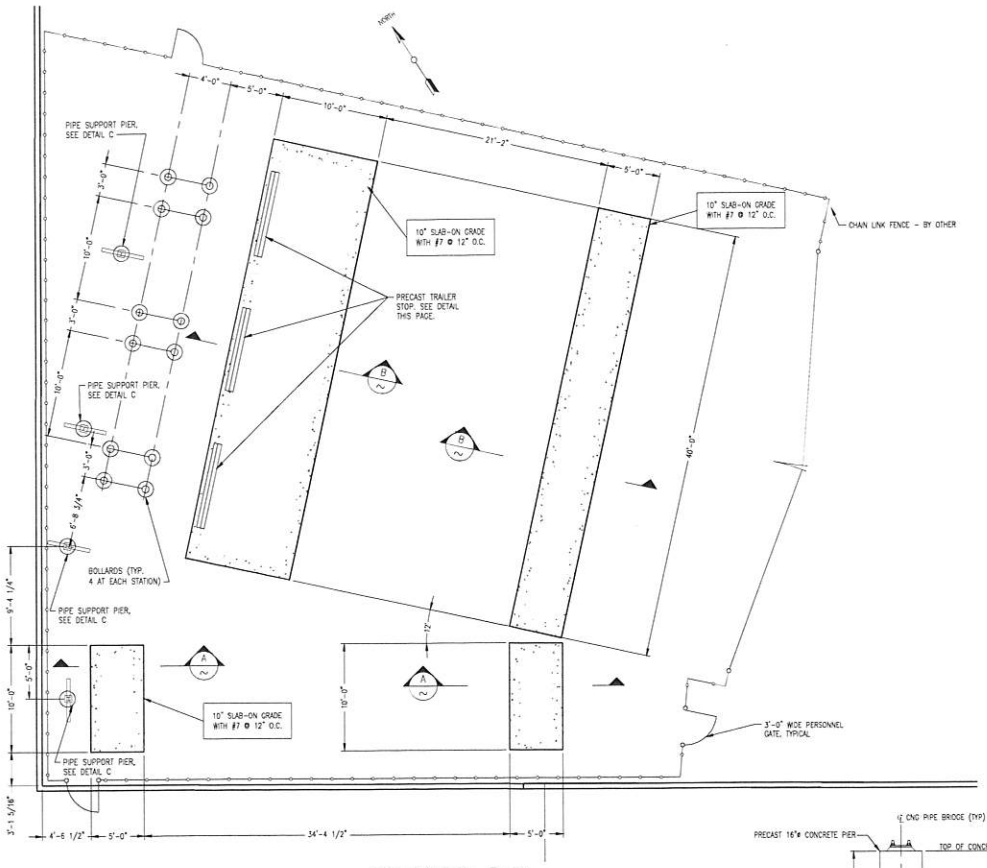

FOUNDATION PLAN

SCALE: 3/16"=1'-0"

NOTE: TOP OF CONCRETE ASSUME TO = 100'-0" - COORDINATE WITH CIVIL DRAWINGS.

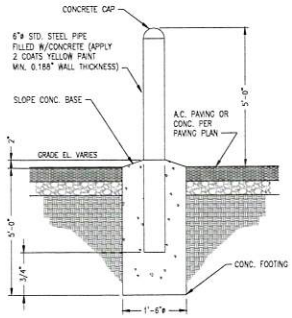

E PIPE BOLLARD DETAIL

SCALE: NOT TO SCALE

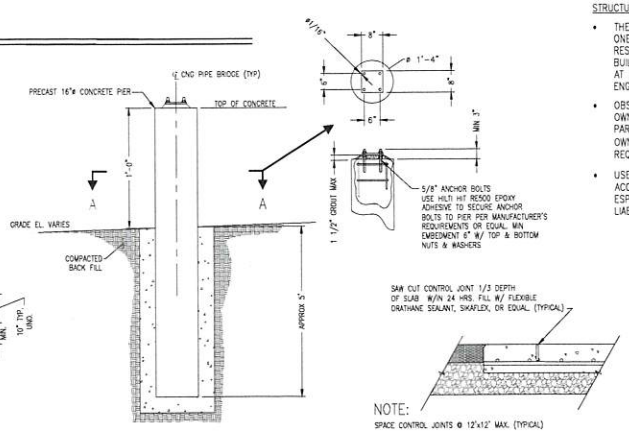

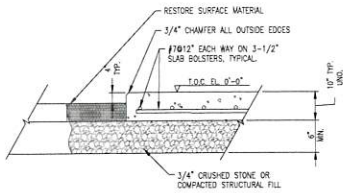

NOTE:
REMOVE EXISTING PAVEMENT AS NEEDED TO INSTALL NEW CONCRETE SLABS.

A TYP. SECTION THRU EQUIPMENT SLAB

SCALE: NOT TO SCALE

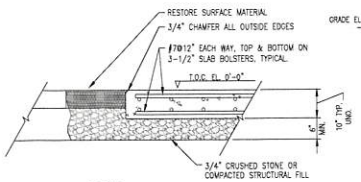

NOTE:
REMOVE EXISTING PAVEMENT AS NEEDED TO INSTALL NEW CONCRETE SLABS.

B TYP. SECTION THRU TRUCK SLAB

SCALE: NOT TO SCALE

C PIPE PIER DETAIL

SCALE: NOT TO SCALE

NOTE:
SPACE CONTROL JOINTS @ 12'x12' MAX. (TYPICAL)

D CONTROL JOINT DETAIL

SCALE: NOT TO SCALE

GENERAL NOTES

TRUCK UNLOADING SLABS/FOOTINGS

DESIGN LIVE LOADS:

- VEHICLE/TRAFFIC: MUEBC, ACI 318 AND AASHTO HS-20 (32,000# / AXLE)

FOUNDATION:

- FOOTINGS SHALL BE PLACED ON UNDISTURBED NATURAL SOIL OR COMPACTED FILL TESTED AND APPROVED BY SOILS ENGINEER. PROOF ROLE AND COMPACT AND SOFT AREAS OR VOIDS.
- MAXIMUM DESIGN SOIL PRESSURE: 1,500 PSF (ALLOWABLE BEARING CAPACITY)
- FOOTINGS SHALL BE PLACED ON 6" OF CRUSHED STONE ON NON-WOVEN GEOTEXTILE ON UNDISTURBED NATURAL SOIL OR COMPACTED FILL TESTED AND APPROVED BY SOILS ENGINEER.
- RETAIN A SOILS ENGINEER TO APPROVE AND REVIEW ALL SUBGRADE PREPERATIONS PRIOR TO STONE AND CONCRETE PLACEMENT
- SAND FILL AND COMPACTION WILL BE REQUIRED WHERE VOIDS OR SOFT FILL IS FOUND

CONCRETE AND REINFORCEMENT:

- CONCRETE SHALL CONFORM TO APPLICABLE PROVISIONS OF ACI-301 AND 318
- CONCRETE PROPERTIES:

  COMPRESSIVE STRENGTH AT 28 DAYS: f'c = 4500 PSI

  AIR ENTRAINMENT: 6%

  W/C RATIO: 0.42

  CEMENT TYPE: I/II
- DEFORMED REINFORCEMENT: ASTM A615 GRADE 60, EXCEPT BARS SPECIFIED TO BE FIELD-BENT, STIRRUPS, AND TIES WHICH SHALL BE GRADE 40.
- REINFORCEMENT SHALL BE FABRICATED AND PLACED PER ACI MANUAL OF STANDARD PRACTICE (ACI-315).
- CONCRETE COVER OVER REINFORCING: 1-1/2" FOR CONCRETE PLACED AGAINST FORMS; 3" FOR CONCRETE PLACED AGAINST EARTH. SEE ALSO DRAWINGS.
- KEEP REINFORCEMENT CLEAN AND FREE OF DIRT, OIL, AND SCALE. OIL FORMS PRIOR TO PLACING REINFORCEMENT.
- ALL REINFORCING STEEL CROSSING COLD JOINTS SHALL BE EPOXY COATED.
- REPAIR DAMAGED EPOXY COATED BARS WITH APPROVED REPAIR COATING.

STRUCTURAL ERECTION AND BRACING REQUIREMENTS:

- THESE PLANS HAVE BEEN ENGINEERED FOR CONSTRUCTION AT ONE SPECIFIC BUILDING SITE. BUILDER ASSUMES ALL RESPONSIBILITY FOR USE OF THESE PLANS AT ANY OTHER BUILDING SITE. PLANS SHALL NOT BE USED FOR CONSTRUCTION AT ANY OTHER BUILDING SITE WITHOUT SPECIFIC REVIEW BY THE ENGINEER.
- OBSERVATIONS OF CONCRETE REINFORCING AS REQUIRED BY THE OWNER, LENDER, INSURER, BUILDING DEPARTMENT OR ANY OTHER PARTY WILL BE ACCOMPLISHED BY THE ENGINEER AT THE OWNER'S EXPENSE. AT LEAST 48 HOURS ADVANCE NOTICE IS REQUESTED.
- USE OF THESE PLANS IS INDICATION THAT THE OWNER/BUILDER ACCEPTS THE RISKS ASSOCIATED WITH BUILDING ON THIS SITE, ESPECIALLY THOSE RELATED TO SETTLEMENT AND ASSUMES LIABILITY FOR DAMAGES CAUSED BY SETTLEMENT.

STATE OF NEW YORK
BRADE D. ALBANESE JR.
LICENSED PROFESSIONAL ENGINEER

NY APEX PROFESSIONAL ENGINEERING SERVICES PC
APEX ENGINEERING
190 US ROUTE ONE
PMB 346
FALMOUTH MAINE, 04105
TEL: (207) 847-3445
FAX: (207) 847-3446
WEB: apexengineering.com

THESE DRAWINGS ARE THE SOLE PROPERTY OF APEX ENGINEERING AND ARE INTENDED SOLELY FOR USE ON THIS PROJECT. ANY REPRODUCTION IS PROHIBITED.

GENERAL NOTES

1. ALL PADS/SLABS TO BE 10" THICK CONCRETE (4,500 PSI) W/ #7 @ 12" EACH WAY @ MID-DEPTH. 5 TO 7 SLUMP.
2. PROOF ROLL ALL AREAS PRIOR TO STONE PLACEMENT.
3. GEOTECHNICAL ENGINEER TO BE ON SITE TO APPROVE ALL SUBGRADE PRIOR TO CRUSHED STONE AND CONCRETE PLACEMENT. (ALLOWABLE BEARING CAPACITY TO BE 1,500 MAX.)
4. PLACE SAND FILL ON EXISTING FILL/VOID AREAS IF NEEDED AT THE DIRECTION OF THE GEOTECHNICAL ENGINEER.
5. SEE E100 SERIES DRAWINGS FOR ELECTRICAL CONDUIT EMBEDMENTS.

REV.	DESCRIPTION	DATE
0	ISSUED FOR CONSTRUCTION	4/12/17

Xpress Natural Gas
22 MARIN WAY
STRATHAM, NY 03885

PROJECT: MONTREICH RESORT CASINO -CNG SITE
265 JOYLAND ROAD
MONTICELLO, NY 12701

TITLE: STRUCTURAL
FOUNDATION PLAN, SECTIONS, & DETAILS

DRAWN BY: TRS	ENGINEERED BY: SAK
PROJECT: '17-018	DWG NO: F-100
DATE: 3/13/17	
SCALE: AS NOTED	

REVIEW BY: PROCESS | PIPING | STRUCT | MECH | ELECT | INSTR

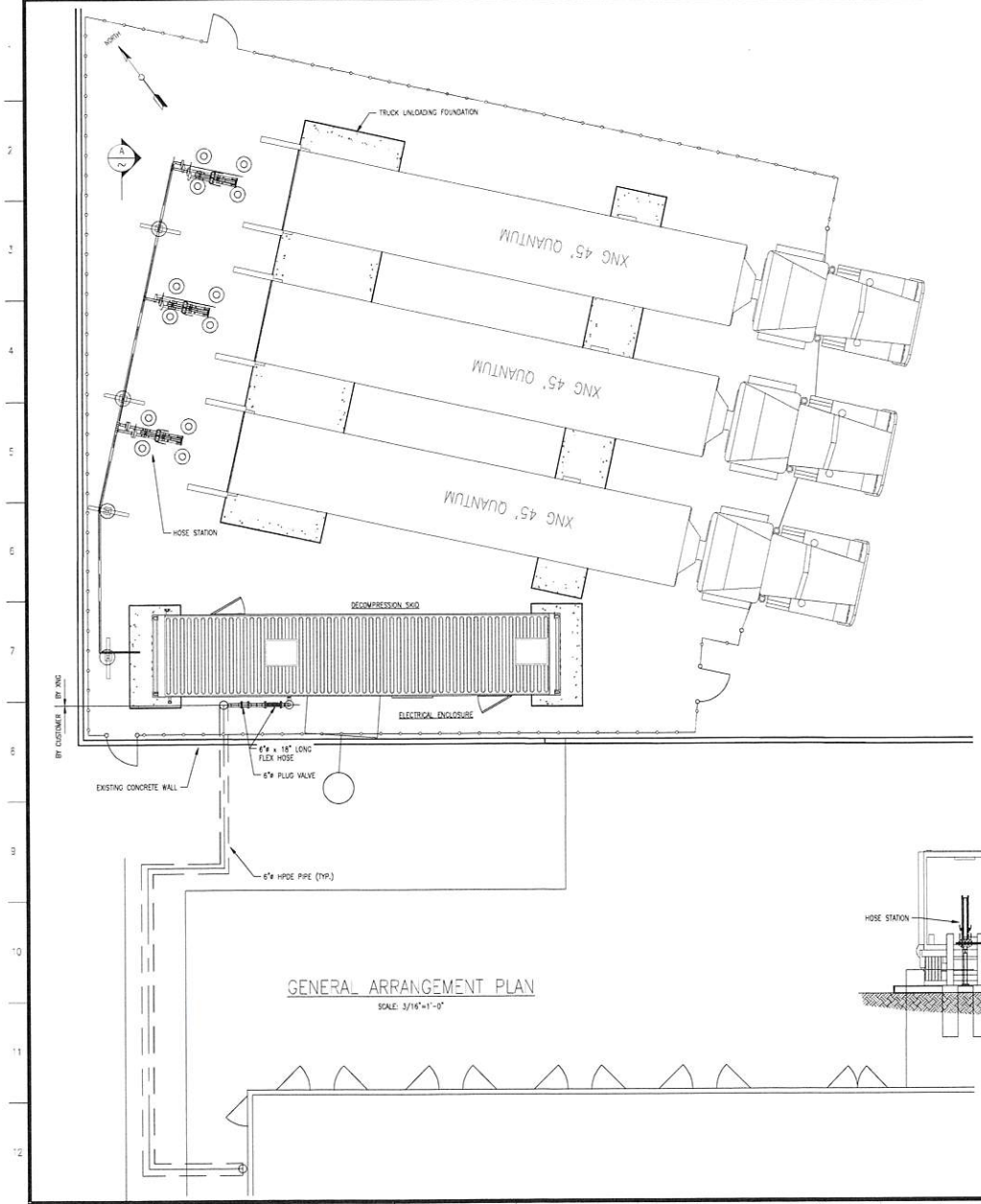

GENERAL ARRANGEMENT PLAN

SCALE: 3/16"=1'-0"

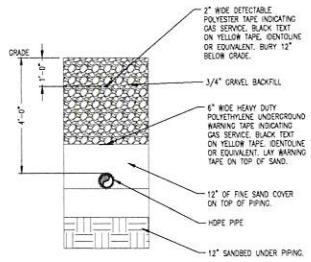

FULL DEPTH

1 U/G NG PIPE TRENCH DETAIL

SCALE: 1/2" = 1'-0"

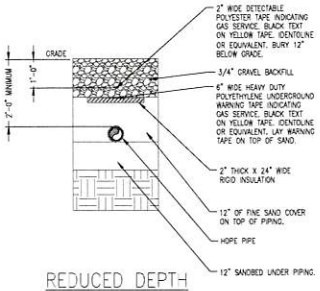

REDUCED DEPTH

2 U/G NG PIPE TRENCH DETAIL

SCALE: 1/2" = 1'-0"

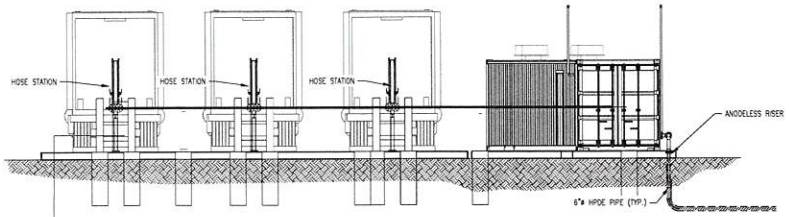

A SECTION

SCALE: 3/16" = 1'-0"

STATE OF NEW YORK
STEPHEN N. SANDERSON
LICENSED PROFESSIONAL ENGINEER
090315
4-12-17

NY APEX PROFESSIONAL ENGINEERING SERVICES PC

APEX ENGINEERING

190 US ROUTE ONE
PMB 346
FALMOUTH MAINE, 04105
TEL: (207) 847-3445
FAX: (207) 847-3446
WEB: apexengineering.com

THESE DRAWINGS ARE THE SOLE PROPERTY OF APEX ENGINEERING AND ARE INTENDED SOLELY FOR USE ON THIS PROJECT ANY REPRODUCTION IS PROHIBITED

GENERAL NOTES

SCALE 3/16" = 1'-0"

REV.	DESCRIPTION	DATE
0	ISSUED FOR CONSTRUCTION	4/12/17

XNG Xpress Natural Gas

22 MARIN WAY
STRATHAM, NY 03885

PROJECT
MONTREIGN RESORT CASINO -CNG SITE
265 JOYLAND ROAD
MONTICELLO, NY 12701

TITLE
MECHANICAL
SITE PLAN

DRAWN BY	ENGINEERED BY
ACY	SNS

PROJECT	DWG NO.
17-018	M-100
DATE 3/29/17	
SCALE 3/32" = 1'-0"	

REVIEW BY | PROCESS | PIPING | STRUCT | MECH | ELECT | INSTR

DESIGN PRINTS AND SPECIFICATIONS

ECM-3.1 Steam Plant Upgrades
ECM-3.2 Hot Water Plant Upgrades
ECM 4.1 New Hot Water Distribution
ECM 4.2 New Chilled Water Distribution
ECM 6.0 Chilled Water Plant Upgrades

COMMONWEALTH OF PENNSYLVANIA
DEPARTMENT OF GENERAL SERVICES

HARRISBURG, PENNSYLVANIA

TOM WOLF, GOVERNOR

CURT TOPPER, SECRETARY

PROJECT NO. D.G.S. GESA 2018-1
GESA PROJECT
SCI HOUTZDALE

HOUTZDALE, CLEARFIELD COUNTY, PENNSYLVANIA

MECHANICAL, STRUCTURAL AND ELECTRICAL ENGINEERING CONSULTANT
ENTECH ENGINEERING, INC.
201 PENN STREET, P.O. BOX 32
READING, PA 19603

IGA SUBMISSION - NOVEMBER 26, 2019

SHEET INDEX

COMMON DRAWINGS
CONTRACT NO. DGS XXX-XX PHASE XX

CS-1 COVER SHEET
KP-1 KEY PLAN

SITE DRAWINGS
CONTRACT NO. DGS XXX-XX PHASE XX

C-101 PIPING PLAN NORTHWEST
C-102 PIPING PLAN NORTHEAST
C-103 PIPING PLAN SOUTHWEST
C-104 PIPING PLAN SOUTHEAST

MECHANICAL DRAWINGS
CONTRACT NO. DGS XXX-XX PHASE XX

MD-101 CENTRAL PLANT DEMOLITION PLAN
MD-102 BUILDING 5 DEMOLITION PLAN
MD-901 CENTRAL PLANT DEMO PHOTOS
MD-902 CENTRAL PLANT DEMO PHOTOS
MD-903 BUILDING 5 DEMO PHOTOS

M-101 CENTRAL PLANT PLAN
M-102 BUILDING 5 PLAN
M-103 BUILDING 2 PENTHOUSE PLAN
M-501 SCHEDULES AND DETAILS
M-601 FLOW DIAGRAMS

ELECTRICAL DRAWINGS
CONTRACT NO. DGS XXX-XX PHASE XX

ED-101 CENTRAL PLANT DEMOLITION POWER PLAN
ED-102 BUILDING 5 DEMOLITION POWER PLAN
ED-601 CENTRAL PLANT 5KV DEMOLITION ONE LINE DIAGRAM
ED-602 CENTRAL PLANT 480V DEMOLITION ONE LINE DIAGRAM
ED-603 BUILDING 5 DEMOLITION ONE LINE DIAGRAM
ED-901 CENTRAL PLANT & BUILDING 5 DEMO PHOTOS

E-101 CENTRAL PLANT POWER PLAN
E-601 CENTRAL PLANT 5KV ONE LINE DIAGRAM
E-602 CENTRAL PLANT 480V DEMOLITION ONE LINE DIAGRAM

811

1-800-242-1776
(TOLL FREE)
"Pa. Law requires advance notification"
PA ONE CALL FOR DESIGN

CODE APPROVALS

PROJECT LOCATION MAP

VICINITY MAP

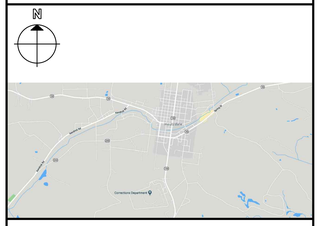

CAMPUS / KEY PLAN

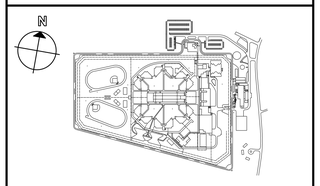

DRAWINGS LISTED IN INDEX:

APPROVED _____ DATE _____
_____, DESIGN MANAGER
BUREAU OF PRE-CONSTRUCTION
DEPARTMENT OF GENERAL SERVICES

SEAL

PROFESSIONAL'S SIGNATURE

ENTECH ENGINEERING
1.800.825.1372
www.entecheng.com
ENTECH # 5787.001

COMMONWEALTH OF PENNSYLVANIA
DEPARTMENT OF GENERAL SERVICES
HARRISBURG, PENNSYLVANIA

D.G.S. PROJECT No.

GESA PROJECT
SCI HOUTZDALE
HOUTZDALE, CLEARFIELD COUNTY, PA

COVER SHEET

DRAWN BY	DATE	SHEET No.
MAR	10/08/2019	CS-1
CHECKED BY MDR	SCALE AS NOTED	1 OF 25

FILE PATH: H:\0005787.001\04-CAD\SheetFiles\CS-1.dwg
LAST SAVED: 2019.11.15 04:56 PM PLOTTED: 2019.11.15 05:12 PM PLOTTED BY: Michael Rissmiller

GENERAL NOTES

1. THE EXISTING HOT WATER AND STEAM SYSTEMS SHALL REMAIN ACTIVE DURING CONSTRUCTION. SHORT DURATION SHUT-DOWNS WILL BE PERMITTED. COORDINATE CONSTRUCTION SEQUENCE WITH THE PROJECT TEAM.
2. THE EXISTING CHILLED WATER SYSTEM CAN BE SHUT-DOWN OVER THE WINTER MONTHS.
3. PROVIDE HIGH PERFORMANCE BUTTERFLY VALVES WITH STAINLESS STEEL SEATS. PROVIDE HANDWHEELS FOR VALVES 8" AND OVER.
4. PROVIDE ASSISTANCE TO THE ENGINEER FOR COMMISSIONING ALL NEW SYSTEMS INSTALLED.

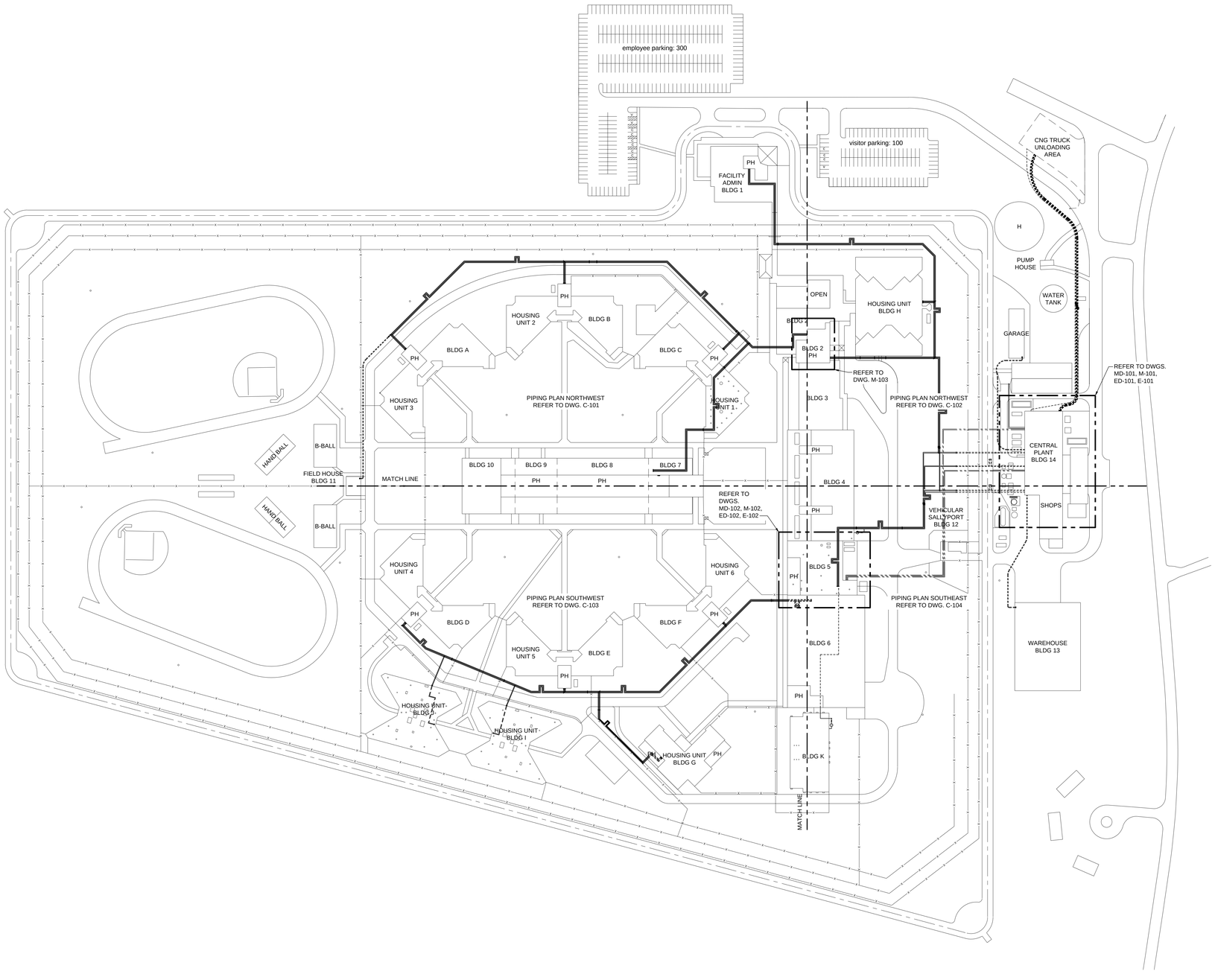

1 **KEY PLAN**

Scale: 1" = 100'

0 100' 200'

N

C	11/15/19 IGA PRICING		
B	10/25/19 IGA PRICING		
A	10/08/19 IGA PRICING		

RECORD REVISIONS

SEAL

SIGNATURE DATE

ENTECH ENGINEERING

1.800.825.1372
www.entecheng.com
ENTECH # 5787.001

COMMONWEALTH OF PENNSYLVANIA
DEPARTMENT OF GENERAL SERVICES
HARRISBURG, PENNSYLVANIA

D.G.S. PROJECT No.
GESA 2018-1

GESA PROJECT
SCI HOUTZDALE
HOUTZDALE, CLEARFIELD COUNTY, PA

KEY PLAN

VERIFY SCALE

BAR IS ONE (1) INCH LONG ON ORIGINAL DRAWING:

0 1

IF BAR IS NOT ONE (1) INCH LONG, ADJUST SCALE ACCORDINGLY

CONTRACTOR SHALL FIELD VERIFY ALL DIMENSIONS. VARIANCE FROM CONTRACT DOCUMENTS NOT PERMITTED WITHOUT PROFESSIONAL & BUREAU OF CONSTRUCTION APPROVAL.

DRAWN BY	DATE	DRAWING No.
MAR	10/08/2019	KP-1
CHECKED BY MDR	SCALE AS NOTED	2 OF 25

FILE PATH: H:\0002787.001\04-CAD\SheetFiles\KP-1.dwg PLOTTED BY: Michael Rosmiller
LAST SAVED: 2019.11.15 02:43 PM PLOTTED: 2019.11.15 05:02 PM

SITE PLAN NOTES

1. THE CONTRACTOR SHALL LOCATE ALL EXISTING UNDERGROUND UTILITIES IN AREAS OF EXCAVATION, INCLUDING EXCAVATION FOR EXTERIOR PIPE SUPPORT BASES. COMPLY WITH REQUIREMENTS OF THE PENNSYLVANIA ONE CALL SYSTEM.
2. THE CONTRACTOR SHALL PROVIDE TRENCHING, BEDDING, BACKFILL AND RESTORATION OF PAVED AND LAWN SURFACES FOR ALL UNDERGROUND PIPING INSTALLATIONS. PROVIDE 36" MINIMUM COVER ABOVE BURIED PIPING. SURFACES TO BE DISTURBED ARE GRASS EXCEPT AS INDICATED OTHERWISE.
3. LOCATE AND PROVIDE EXTERIOR PIPE SUPPORTS BASED ON THE SMALLEST PIPE IN THE PIPE GROUPING. LOCATE SUPPORTS BASED ON THE FOLLOWING TABLE.

SMALLEST PIPE SIZE	MAXIMUM SUPPORT SPACING
10"	27'
8"	24'
6"	20'
4"	16'
3"	14'
2"	12'

PROVIDE PIPE ROLL STAND, PIPE SADDLE, AND 180 DEGREE STAINLESS STEEL INSULATION PROTECTION SHIELD FOR EACH PIPE AT EACH SUPPORT.

4. EXCEPT AS OTHERWISE NOTED PIPE SUPPORTS SHALL PROVIDE A MINIMUM OF 5' CLEARANCE ABOVE LAWNS (FOR MOWING), 15' CLEARANCE ABOVE ROADWAYS (FOR TRUCKS), AND 3' CLEARANCE ABOVE ROOFS (FOR ROOF REPLACEMENT). REFER TO TYPICAL PIPE SUPPORTS SKETCHES SUBMITTED SEPARATELY.
5. CUT AND PATCH EXISTING RUBBER ROOFS FOR INSTALLATION OF PIPE SUPPORTS ACROSS ROOFS. UTILIZE A CERTIFIED ROOFING CONTRACTOR TO MAINTAIN REMAINING ROOF WARRANTIES.
6. PROVIDE MANUAL AIR VENTS AT PIPING HIGH SPOTS AND HOSE END DRAIN VALVES AT PIPING LOW SPOTS. REFER TO DETAILS 4 AND 5 ON DRAWING C-104.
7. INSULATE ALL NEW PIPING WITH MINERAL WOOL INSULATION AND ALUMINUM JACKET WITH ALUMINUM FITTING COVERS. PROVIDE THE FOLLOWING INSULATION THICKNESSES.

PIPE	THICKNESS
STEAM	5"
CONDENSATE	2 1/2"
HOT WATER	3"
CHILLED WATER	3"
GAS	NONE

8. BALANCE THE PIPING SYSTEM TO FLOWS SPECIFIED BY THE ENGINEER.

SHEET KEYNOTES

1. PROVIDE HOT WATER CONNECTION TO EXISTING HOT WATER SYSTEM IN BUILDING AT LOCATION SHOWN. REFER TO DETAIL 3 ON DRAWING C-104.
2. PROVIDE CHILLED WATER CONNECTION TO EXISTING CHILLED WATER SYSTEM IN BUILDING AT LOCATION SHOWN. REFER TO DETAIL 2 ON DRAWING C-104.
3. RISE UP ALONG BUILDING TO APPROXIMATELY 35' ABOVE GRADE TO PENETRATE WALL OF PENTHOUSE. PENETRATE WALL WITH FOUR 8"Ø SCH. 40 PIPE SLEEVES.
4. PROVIDE 1 1/4" WELDED STEEL BALL SHUT-OFF VALVES ON 1 1/4" STEEL PIPING DROPS PRIOR TO CONVERSION TO PEX PIPING AND DROPPING BELOW GRADE.
5. PROVIDE 2" BY-PASS ON EXISTING 3" CHILLED WATER RISERS AT THIS LOCATION IN PENTHOUSE. SIMILAR TO DETAIL 2 ON DRAWING C-104.
6. PROVIDE 2" BY-PASS ON EXISTING 2 1/2" HOT WATER RISERS AT THIS LOCATION IN PENTHOUSE. SIMILAR TO DETAIL 3 ON DRAWING C-104.
7. CUT AND PATCH FLOOR AND FOUNDATION FOR REMOVAL OF EXISTING UNDERGROUND PIPING SERVICE AND INSTALLATION OF NEW. SLEEVE FOUNDATION WALL FOR NEW PIPING INSTALLATION.

LEGEND

HBS HIGH PIPE SUPPORTS (15' CLEARANCE)
LBS LOW PIPE SUPPORTS (5' MIN. CLEARANCE)
PH PENTHOUSE
FENCE

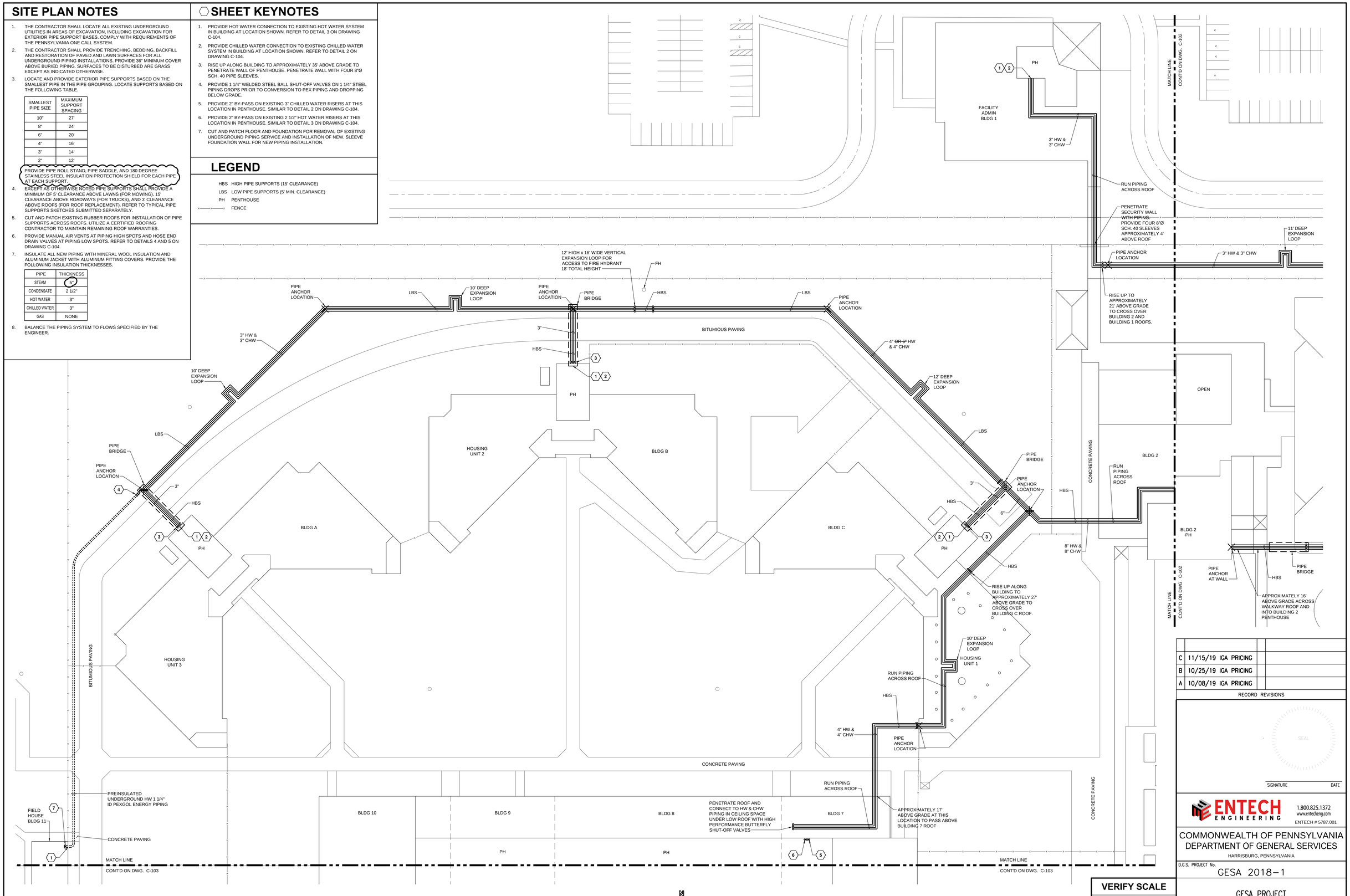

1 **SITE PLAN NORTHWEST**
Scale: 1" = 30'
0 30' 60'

C	11/15/19 IGA PRICING	
B	10/25/19 IGA PRICING	
A	10/08/19 IGA PRICING	

RECORD REVISIONS

SEAL
SIGNATURE DATE

ENTECH ENGINEERING
1.800.825.1372
www.entecheng.com
ENTECH # 5787.001

COMMONWEALTH OF PENNSYLVANIA
DEPARTMENT OF GENERAL SERVICES
HARRISBURG, PENNSYLVANIA

D.G.S. PROJECT No.
GESA 2018-1

GESA PROJECT
SCI HOUTZDALE
HOUTZDALE, CLEARFIELD COUNTY, PA

PIPING PLAN NORTHWEST

VERIFY SCALE
BAR IS ONE (1) INCH LONG ON ORIGINAL DRAWING:
0 1
IF BAR IS NOT ONE (1) INCH LONG, ADJUST SCALE ACCORDINGLY

CONTRACTOR SHALL FIELD VERIFY ALL DIMENSIONS. VARIANCE FROM CONTRACT DOCUMENTS NOT PERMITTED WITHOUT PROFESSIONAL & BUREAU OF CONSTRUCTION APPROVAL.

DRAWN BY	DATE	DRAWING No.
MAR	10/08/2019	C-101
CHECKED BY	SCALE	
MDR	AS NOTED	3 OF 25

FILE PATH: H:\0002787.001\04-CAD\SheetFiles\C-101.dwg PLOTTED BY: Michael Rosmiller
LAST SAVED: 2019.11.15 04:51 PM PLOTTED: 2019.11.15 05:02 PM

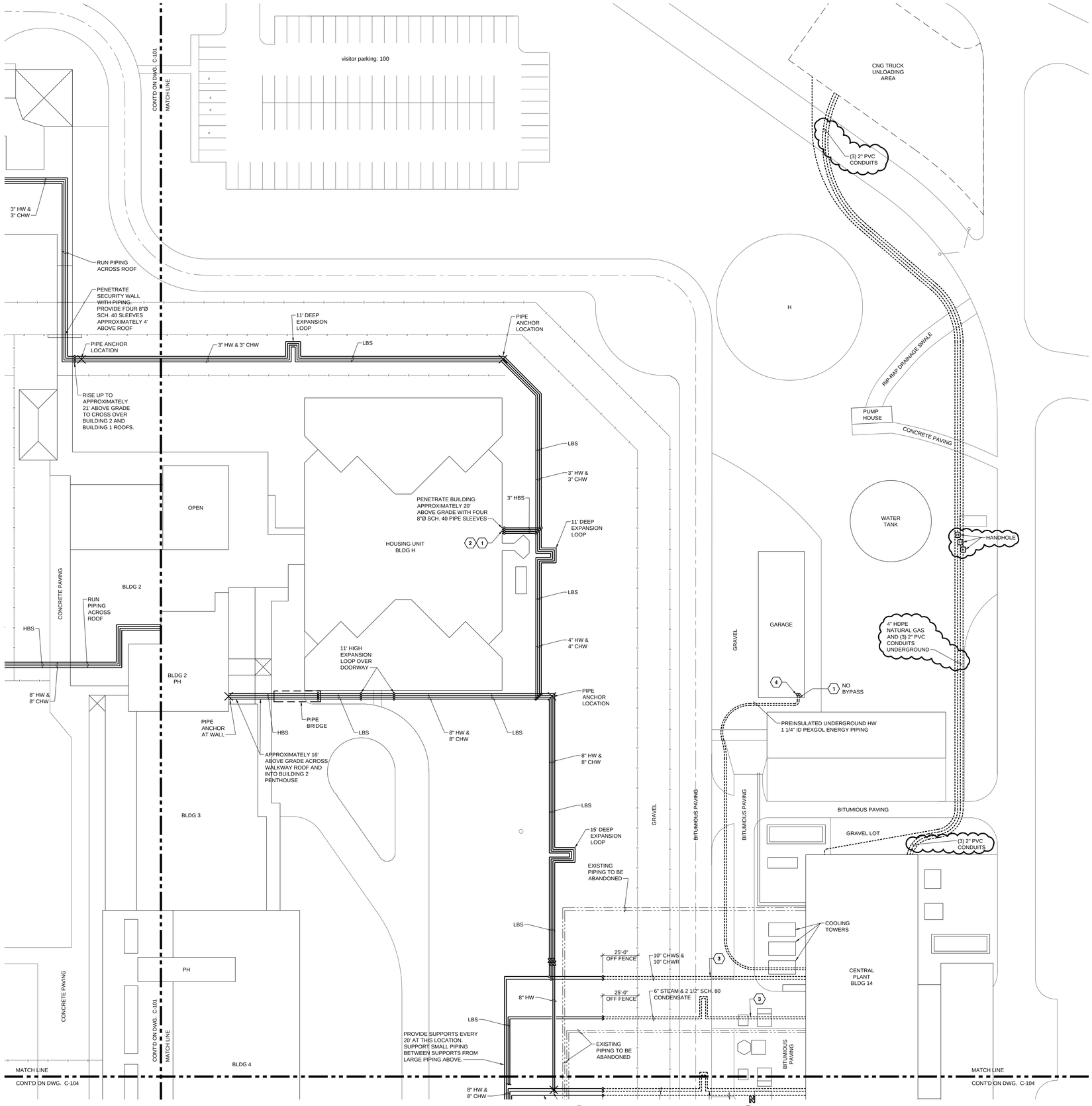

1 **SITE PLAN NORTHEAST**

Scale: 1" = 30'

0 30' 60'

SITE PLAN NOTES

1. THE CONTRACTOR SHALL LOCATE ALL EXISTING UNDERGROUND UTILITIES IN AREAS OF EXCAVATION, INCLUDING EXCAVATION FOR EXTERIOR PIPE SUPPORT BASES. COMPLY WITH REQUIREMENTS OF THE PENNSYLVANIA ONE CALL SYSTEM.
2. THE CONTRACTOR SHALL PROVIDE TRENCHING, BEDDING, BACKFILL AND RESTORATION OF PAVED AND LAWN SURFACES FOR ALL UNDERGROUND PIPING INSTALLATIONS. PROVIDE 36" MINIMUM COVER ABOVE BURIED PIPING. SURFACES TO BE DISTURBED ARE GRASS EXCEPT AS INDICATED OTHERWISE.
3. LOCATE AND PROVIDE EXTERIOR PIPE SUPPORTS BASED ON THE SMALLEST PIPE IN THE PIPE GROUPING. LOCATE SUPPORTS BASED ON THE FOLLOWING TABLE.

SMALLEST PIPE SIZE	MAXIMUM SUPPORT SPACING
10"	27'
8"	24'
6"	20'
4"	16'
3"	14'
2"	12'

PROVIDE PIPE ROLL STAND, PIPE SADDLE, AND 180 DEGREE STAINLESS STEEL INSULATION PROTECTION SHIELD FOR EACH PIPE AT EACH SUPPORT.

4. EXCEPT AS OTHERWISE NOTED PIPE SUPPORTS SHALL PROVIDE A MINIMUM OF 5' CLEARANCE ABOVE LAWNS (FOR MOWING), 15' CLEARANCE ABOVE ROADWAYS (FOR TRUCKS), AND 3' CLEARANCE ABOVE ROOFS (FOR ROOF REPLACEMENT). REFER TO TYPICAL PIPE SUPPORTS SKETCHES SUBMITTED SEPARATELY.
5. PROVIDE HIGH PERFORMANCE BUTTERFLY VALVES WITH STAINLESS STEEL SEATS. PROVIDE HANDWHEELS FOR VALVES 8" AND OVER.
6. CUT AND PATCH EXISTING RUBBER ROOFS FOR INSTALLATION OF PIPE SUPPORTS ACROSS ROOFS. UTILIZE A CERTIFIED ROOFING CONTRACTOR TO MAINTAIN REMAINING ROOF WARRANTIES.
7. PROVIDE MANUAL AIR VENTS AT PIPING HIGH SPOTS AND HOSE END DRAIN VALVES AT PIPING LOW SPOTS. REFER TO DETAILS 4 AND 5 ON DRAWING C-104.
8. INSULATE ALL NEW PIPING WITH MINERAL WOOL INSULATION AND ALUMINUM JACKET WITH ALUMINUM FITTING COVERS. PROVIDE THE FOLLOWING INSULATION THICKNESSES.

PIPE	THICKNESS
STEAM	5"
CONDENSATE	2 1/2"
HOT WATER	3"
CHILLED WATER	3"
GAS	NONE

9. BALANCE THE PIPING SYSTEM TO FLOWS SPECIFIED BY THE ENGINEER.

SHEET KEYNOTES

1. PROVIDE HOT WATER CONNECTION TO EXISTING HOT WATER SYSTEM IN BUILDING AT LOCATION SHOWN. REFER TO DETAIL 3 ON DRAWING C-104.
2. PROVIDE CHILLED WATER CONNECTION TO EXISTING CHILLED WATER SYSTEM IN BUILDING AT LOCATION SHOWN. REFER TO DETAIL 2 ON DRAWING C-104.
3. PREFABRICATED INSULATED UNDERGROUND PIPING CONDUIT SYSTEM. STEAM PIPING SHALL BE CLASS A SYSTEM.
4. CUT AND PATCH FLOOR AND FOUNDATION FOR REMOVAL OF EXISTING UNDERGROUND PIPING SERVICE AND INSTALLATION OF NEW. SLEEVE FOUNDATION WALL FOR NEW PIPING INSTALLATION.

LEGEND

HBS HIGH PIPE SUPPORTS (15' CLEARANCE)
LBS LOW PIPE SUPPORTS (5' MIN. CLEARANCE)
PH PENTHOUSE
x——x——x FENCE

C	11/15/19 IGA PRICING		
B	10/25/19 IGA PRICING		
A	10/08/19 IGA PRICING		

RECORD REVISIONS

SEAL

SIGNATURE DATE

ENTECH ENGINEERING 1.800.825.1372 www.entecheng.com ENTECH # 5787.001

COMMONWEALTH OF PENNSYLVANIA
DEPARTMENT OF GENERAL SERVICES
HARRISBURG, PENNSYLVANIA

D.G.S. PROJECT No. GESA 2018-1

GESA PROJECT
SCI HOUTZDALE
HOUTZDALE, CLEARFIELD COUNTY, PA

PIPING PLAN NORTHEAST

VERIFY SCALE
BAR IS ONE (1) INCH LONG ON ORIGINAL DRAWING:
0 1
IF BAR IS NOT ONE (1) INCH LONG, ADJUST SCALE ACCORDINGLY

CONTRACTOR SHALL FIELD VERIFY ALL DIMENSIONS. VARIANCE FROM CONTRACT DOCUMENTS NOT PERMITTED WITHOUT PROFESSIONAL & BUREAU OF CONSTRUCTION APPROVAL.

DRAWN BY	DATE	DRAWING No.
MAR	10/08/2019	C-102
CHECKED BY MDR	SCALE AS NOTED	4 OF 25

FILE PATH: H:\0002787.001\04-CAD\SheetFiles\C-101.dwg PLOTTED: 2019.11.15 05:02 PM PLOTTED BY: Michael Rispmiller
LAST SAVED: 2019.11.15 04:51 PM

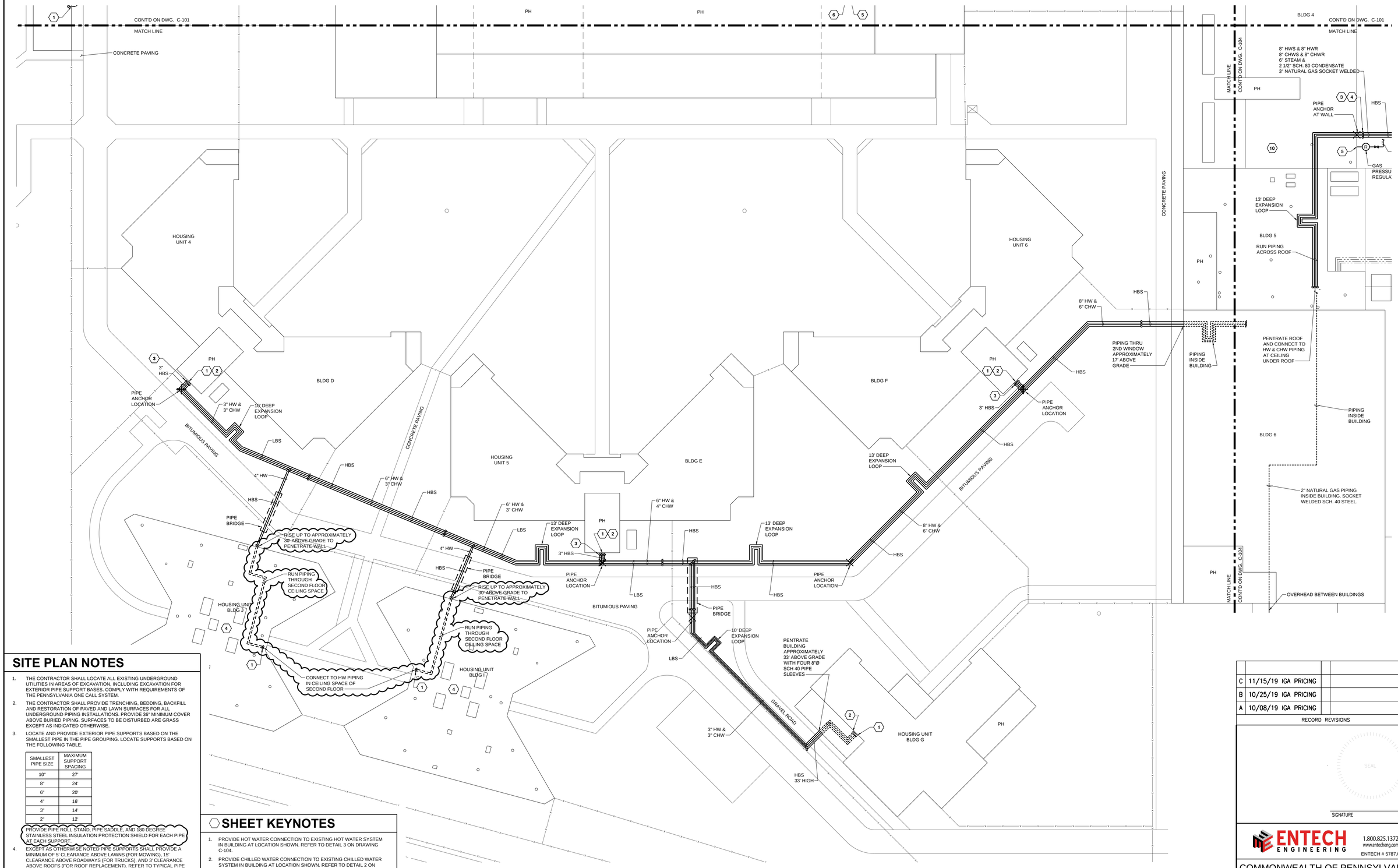

SITE PLAN NOTES

1. THE CONTRACTOR SHALL LOCATE ALL EXISTING UNDERGROUND UTILITIES IN AREAS OF EXCAVATION, INCLUDING EXCAVATION FOR EXTERIOR PIPE SUPPORT BASES. COMPLY WITH REQUIREMENTS OF THE PENNSYLVANIA ONE CALL SYSTEM.
2. THE CONTRACTOR SHALL PROVIDE TRENCHING, BEDDING, BACKFILL AND RESTORATION OF PAVED AND LAWN SURFACES FOR ALL UNDERGROUND PIPING INSTALLATIONS. PROVIDE 36" MINIMUM COVER ABOVE BURIED PIPING. SURFACES TO BE DISTURBED ARE GRASS EXCEPT AS INDICATED OTHERWISE.
3. LOCATE AND PROVIDE EXTERIOR PIPE SUPPORTS BASED ON THE SMALLEST PIPE IN THE PIPE GROUPING. LOCATE SUPPORTS BASED ON THE FOLLOWING TABLE.

SMALLEST PIPE SIZE	MAXIMUM SUPPORT SPACING
10"	27'
8"	24'
6"	20'
4"	16'
3"	14'
2"	12'

PROVIDE PIPE ROLL STAND, PIPE SADDLE, AND 180 DEGREE STAINLESS STEEL INSULATION PROTECTION SHIELD FOR EACH PIPE AT EACH SUPPORT.

4. EXCEPT AS OTHERWISE NOTED PIPE SUPPORTS SHALL PROVIDE A MINIMUM OF 5' CLEARANCE ABOVE LAWNS (FOR MOWING), 15' CLEARANCE ABOVE ROADWAYS (FOR TRUCKS), AND 3' CLEARANCE ABOVE ROOFS (FOR ROOF REPLACEMENT). REFER TO TYPICAL PIPE SUPPORTS SKETCHES SUBMITTED SEPARATELY.
5. CUT AND PATCH EXISTING RUBBER ROOFS FOR INSTALLATION OF PIPE SUPPORTS ACROSS ROOFS. UTILIZE A CERTIFIED ROOFING CONTRACTOR TO MAINTAIN REMAINING ROOF WARRANTIES.
6. PROVIDE MANUAL AIR VENTS AT PIPING HIGH SPOTS AND HOSE END DRAIN VALVES AT PIPING LOW SPOTS. REFER TO DETAILS 4 AND 5 ON DRAWING C-104.
7. INSULATE ALL NEW PIPING WITH MINERAL WOOL INSULATION AND ALUMINUM JACKET WITH ALUMINUM FITTING COVERS. PROVIDE THE FOLLOWING INSULATION THICKNESSES.

PIPE	THICKNESS
STEAM	5"
CONDENSATE	2 1/2"
HOT WATER	3"
CHILLED WATER	3"
GAS	NONE

8. BALANCE THE PIPING SYSTEM TO FLOWS SPECIFIED BY THE ENGINEER.

SHEET KEYNOTES

1. PROVIDE HOT WATER CONNECTION TO EXISTING HOT WATER SYSTEM IN BUILDING AT LOCATION SHOWN. REFER TO DETAIL 3 ON DRAWING C-104.
2. PROVIDE CHILLED WATER CONNECTION TO EXISTING CHILLED WATER SYSTEM IN BUILDING AT LOCATION SHOWN. REFER TO DETAIL 2 ON DRAWING C-104.
3. RISE UP ALONG BUILDING TO APPROXIMATELY 35' ABOVE GRADE TO PENETRATE WALL OF PENTHOUSE. PENETRATE WALL WITH FOUR 8"Ø SCH. 40 PIPE SLEEVES.
4. PROVIDE ONE 4" FLANGED CALIBRATED BALANCING VALVE ON THE 4" HEATING HOT WATER SUPPLY PIPE TO THE EXISTING DOMESTIC WATER HEATER LOCATED IN THE MECHANICAL ROOM. BALANCE WATER HEATER TO FLOWS SPECIFIED BY THE ENGINEER.

LEGEND

HBS HIGH PIPE SUPPORTS (15' CLEARANCE)
LBS LOW PIPE SUPPORTS (5' MIN. CLEARANCE)
PH PENTHOUSE
x——x——x FENCE

1 **SITE PLAN SOUTHWEST**
Scale: 1" = 30'
0 30' 60'

N

C	11/15/19 IGA PRICING		
B	10/25/19 IGA PRICING		
A	10/08/19 IGA PRICING		

RECORD REVISIONS

SEAL
SIGNATURE DATE

ENTECH ENGINEERING
1.800.825.1372
www.entecheng.com
ENTECH # 5787.001

COMMONWEALTH OF PENNSYLVANIA
DEPARTMENT OF GENERAL SERVICES
HARRISBURG, PENNSYLVANIA

D.G.S. PROJECT No.
GESA 2018-1

GESA PROJECT
SCI HOUTZDALE
HOUTZDALE, CLEARFIELD COUNTY, PA

PIPING PLAN SOUTHWEST

VERIFY SCALE
BAR IS ONE (1) INCH LONG ON ORIGINAL DRAWING:
0 1
IF BAR IS NOT ONE (1) INCH LONG, ADJUST SCALE ACCORDINGLY

CONTRACTOR SHALL FIELD VERIFY ALL DIMENSIONS. VARIANCE FROM CONTRACT DOCUMENTS NOT PERMITTED WITHOUT PROFESSIONAL & BUREAU OF CONSTRUCTION APPROVAL.

DRAWN BY	DATE	DRAWING No.
MAR	10/08/2019	C-103
CHECKED BY MDR	SCALE AS NOTED	5 OF 25

FILE PATH: H:\0002787.001\04-CAD\Sheetfiles\C-101.dwg PLOTTED BY: Michael Rissmiller
LAST SAVED: 2019/11/15 04:51 PM PLOTTED: 2019/11/15 05:02 PM

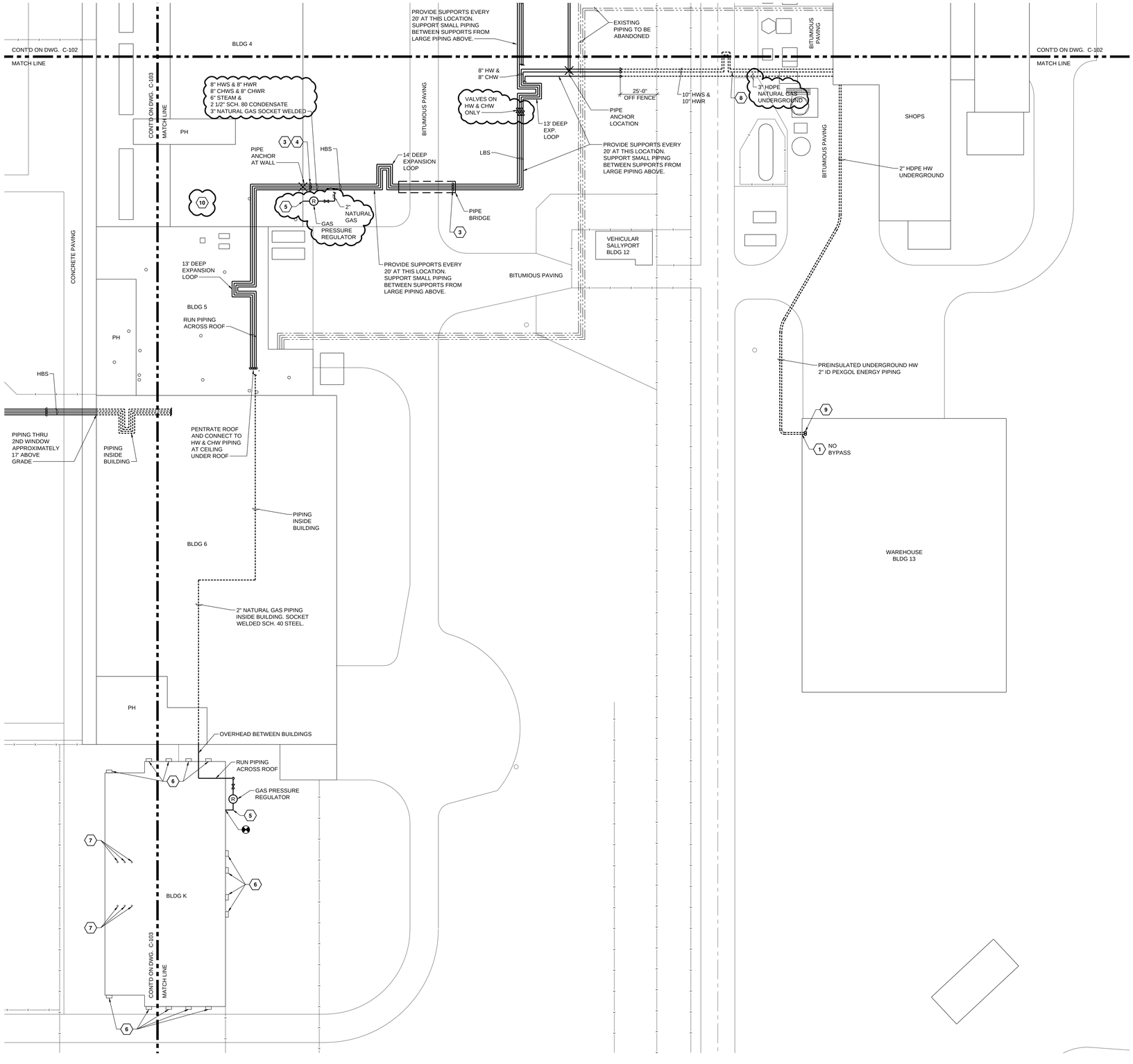

1 SITE PLAN SOUTHEAST

Scale: 1" = 30'

0 30' 60'

N

SITE PLAN NOTES

1. THE CONTRACTOR SHALL LOCATE ALL EXISTING UNDERGROUND UTILITIES IN AREAS OF EXCAVATION, INCLUDING EXCAVATION FOR EXTERIOR PIPE SUPPORT BASES. COMPLY WITH REQUIREMENTS OF THE PENNSYLVANIA ONE CALL SYSTEM.
2. THE CONTRACTOR SHALL PROVIDE TRENCHING, BEDDING, BACKFILL AND RESTORATION OF PAVED AND LAWN SURFACES FOR ALL UNDERGROUND PIPING INSTALLATIONS. PROVIDE 36" MINIMUM COVER ABOVE BURIED PIPING. SURFACES TO BE DISTURBED ARE GRASS EXCEPT AS INDICATED OTHERWISE.
3. LOCATE AND PROVIDE EXTERIOR PIPE SUPPORTS BASED ON THE SMALLEST PIPE IN THE PIPE GROUPING. LOCATE SUPPORTS BASED ON THE FOLLOWING TABLE.

SMALLEST PIPE SIZE	MAXIMUM SUPPORT SPACING
10"	27'
8"	24'
6"	20'
4"	16'
3"	14'
2"	12'

PROVIDE PIPE ROLL STAND, PIPE SADDLE, AND 180 DEGREE STAINLESS STEEL INSULATION PROTECTION SHIELD FOR EACH PIPE AT EACH SUPPORT.

4. EXCEPT AS OTHERWISE NOTED PIPE SUPPORTS SHALL PROVIDE A MINIMUM OF 5' CLEARANCE ABOVE LAWNS (FOR MOWING), 15' CLEARANCE ABOVE ROADWAYS (FOR TRUCKS), AND 3' CLEARANCE ABOVE ROOFS (FOR ROOF REPLACEMENT). REFER TO TYPICAL PIPE SUPPORTS SKETCHES SUBMITTED SEPARATELY.
5. PROVIDE HIGH PERFORMANCE BUTTERFLY VALVES WITH STAINLESS STEEL SEATS. PROVIDE HANDWHEELS FOR VALVES 8" AND OVER.
6. CUT AND PATCH EXISTING RUBBER ROOFS FOR INSTALLATION OF PIPE SUPPORTS ACROSS ROOFS. UTILIZE A CERTIFIED ROOFING CONTRACTOR TO MAINTAIN REMAINING ROOF WARRANTIES.
7. PROVIDE MANUAL AIR VENTS AT PIPING HIGH SPOTS AND HOSE END DRAIN VALVES AT PIPING LOW SPOTS. REFER TO DETAILS 4 AND 5 ON DRAWING C-104.
8. INSULATE ALL NEW PIPING WITH MINERAL WOOL INSULATION AND ALUMINUM JACKET WITH ALUMINUM FITTING COVERS. PROVIDE THE FOLLOWING INSULATION THICKNESSES.

PIPE	THICKNESS
STEAM	5"
CONDENSATE	2 1/2"
HOT WATER	3"
CHILLED WATER	3"
GAS	NONE

9. BALANCE THE PIPING SYSTEM TO FLOWS SPECIFIED BY THE ENGINEER.

SHEET KEYNOTES

1. PROVIDE HOT WATER CONNECTION TO EXISTING HOT WATER SYSTEM IN BUILDING AT LOCATION SHOWN. REFER TO DETAIL 3 ON DRAWING C-104.
2. NOT USED.
3. PROVIDE THERMODISC STEAM TRAP ASSEMBLY AT BOTTOM OF STEAM PIPE RISE. DISCHARGE INTO CONDENSATE PIPE.
4. RISE FROM 15' HIGH PIPE SUPPORTS TO APPROXIMATELY 25' HIGH ABOVE GRADE TO CROSS ABOVE BUILDING 4 AND BUILDING 5 ROOFS.
5. CONNECT TO EXISTING 2" LIQUID PROPANE PIPING IN APPROXIMATELY THIS LOCATION WITH NEW 2" NATURAL GAS PIPING, SHUT-OFF VALVE, AND REGULATOR. REMOVE 2" PROPANE PIPING SERVICE AND REGULATOR. CAP AND ABANDON PROPANE PIPING LOCATED UNDERGROUND.
6. CONVERT EXISTING BARD (MODEL: WG-451-BXAUX) HVAC UNITS (50,000 BTUH EACH) FROM PROPANE TO NATURAL GAS. CONVERT A TOTAL OF 14 UNITS IN BLOCK K.
7. REPLACE EXISTING RHEEM (MODEL: RTG-95DV) PROPANE FIRED DOMESTIC WATER HEATERS (199,000 BTUH EACH) WITH EQUIVALENT NATURAL GAS HEATERS. REPLACE A TOTAL OF 6 UNITS IN BLOCK K.
8. PREFABRICATED INSULATED UNDERGROUND PIPING CONDUIT SYSTEM.
9. CUT AND PATCH FLOOR AND FOUNDATION FOR REMOVAL OF EXISTING UNDERGROUND PIPING SERVICE AND INSTALLATION OF NEW. SLEEVE FOUNDATION WALL FOR NEW PIPING INSTALLATION.
10. CONVERT EXISTING KITCHEN EQUIPMENT FROM PROPANE TO NATURAL GAS (10 ITEMS).

LEGEND

HBS HIGH PIPE SUPPORTS (15' CLEARANCE)
LBS LOW PIPE SUPPORTS (5' MIN. CLEARANCE)
PH PENTHOUSE
FENCE

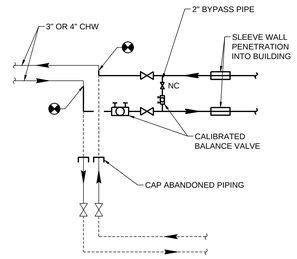

2 CHILLED WATER PIPING INTO BLDG. DETAIL

Scale: NONE

TYP. 8 PLACES

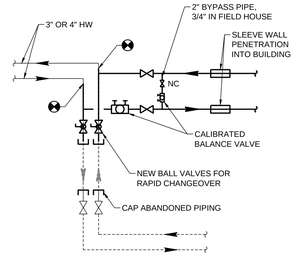

3 HOT WATER PIPING INTO BLDG. DETAIL

Scale: NONE

TYP. 11 PLACES

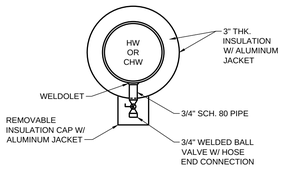

4 DRAIN DETAIL

Scale: NONE

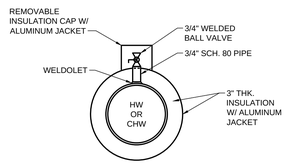

5 AIR VENT DETAIL

Scale: NONE

C	11/15/19 IGA PRICING		
B	10/25/19 IGA PRICING		
A	10/08/19 IGA PRICING		

RECORD REVISIONS

SEAL

SIGNATURE DATE

ENTECH ENGINEERING
1.800.825.1372
www.entechengcom
ENTECH # 5787.001

COMMONWEALTH OF PENNSYLVANIA
DEPARTMENT OF GENERAL SERVICES
HARRISBURG, PENNSYLVANIA

D.G.S. PROJECT No.
GESA 2018-1

GESA PROJECT
SCI HOUTZDALE
HOUTZDALE, CLEARFIELD COUNTY, PA

PIPING PLAN SOUTHEAST

VERIFY SCALE

BAR IS ONE (1) INCH LONG ON ORIGINAL DRAWING:
0 1
IF BAR IS NOT ONE (1) INCH LONG, ADJUST SCALE ACCORDINGLY

CONTRACTOR SHALL FIELD VERIFY ALL DIMENSIONS. VARIANCE FROM CONTRACT DOCUMENTS NOT PERMITTED WITHOUT PROFESSIONAL & BUREAU OF CONSTRUCTION APPROVAL.

DRAWN BY	DATE	DRAWING No.
MAR	10/08/2019	C-104
CHECKED BY	SCALE	
MDR	AS NOTED	6 OF 25

FILE PATH: H:\0002787.001\04-CAD\SheetFiles\C-101.dwg PLOTTED BY: Michael Rispmiller
LAST SAVED: 2019.11.15 04:51 PM PLOTTED: 2019.11.15 05:02 PM

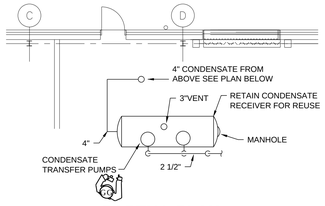

2 PARTIAL PLAN - EQUIPMENT BELOW

Scale: 1/8" = 1'0"

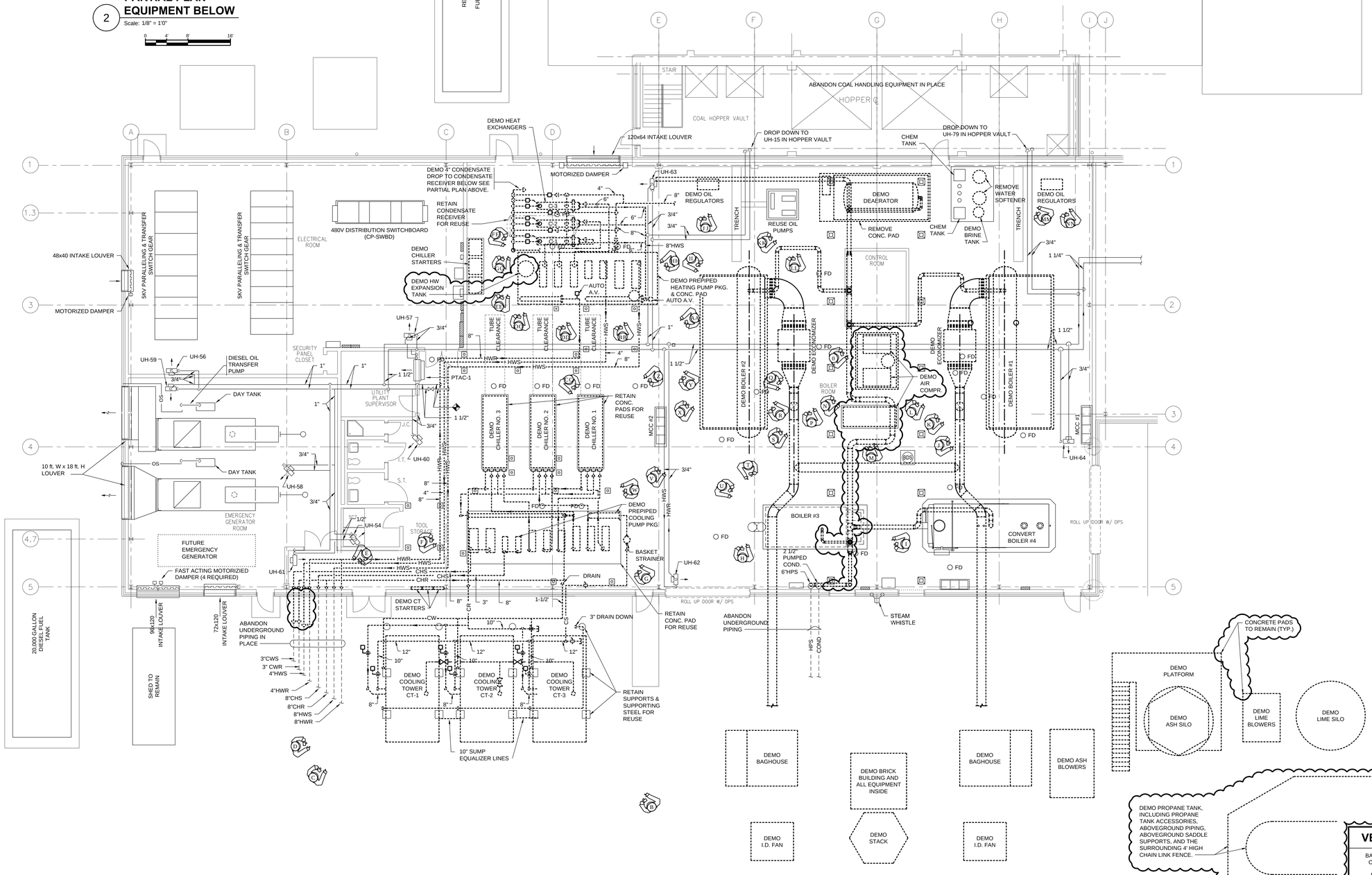

1 MAINTENANCE SHOPS & CENTRAL PLANT - GROUND FLOOR DEMO PLAN

Scale: 1/8" = 1'0"

GENERAL DEMOLITION NOTES

1. REMOVE HOT, CHILLED AND CONDENSER WATER PIPING EXCEPT FOR HOT WATER UNIT HEATER PIPING SHOWN TO REMAIN.
2. REFER TO DRAWING MD-901 & MD-902 FOR PHOTOS.
3. DEMOLITION OF THE EMISSIONS EQUIPMENT LOCATED OUTSIDE THE WEST SIDE OF THE UTILITY PLANT DOES NOT INCLUDE REMOVAL OF CONCRETE PADS AT GRADE, EXCEPT AS NEEDED FOR THE INSTALLATION OF NEW UNDERGROUND PIPING SHOWN ON DRAWING M-101.
4. THE FOLLOWING DEFINITIONS APPLY TO THE WORK:
   - A. REMOVE: REMOVE AND LEGALLY DISPOSE OF ITEMS EXCEPT THOSE INDICATED TO BE REINSTALLED, SALVAGED OR TO REMAIN THE OWNER'S PROPERTY.
   - B. REMOVE AND SALVAGE: ITEMS INDICATED TO BE REMOVED AND SALVAGED REMAIN THE OWNER'S PROPERTY. REMOVE, CLEAN AND PACK OR CRATE ITEMS TO PROTECT AGAINST DAMAGE. IDENTIFY CONTENTS OF CONTAINERS AND DELIVERY TO OWNER'S DESIGNATED STORAGE AREA.
   - C. REMOVE AND REINSTALL: REMOVE ITEMS INDICATED:CLEAN, SERVICE AND OTHERWISE PREPARE THEM FOR REUSE; STORE AND PROTECT THEM AGAINST DAMAGE. REINSTALL ITEMS IN THE SAME LOCATIONS OR IN LOCATIONS INDICATED.
   - D. EXISTING TO REMAIN: PROTECT CONSTRUCTION INDICATED TO REMAIN AGAINST DAMAGED AND SOILING DURING SELECTIVE DEMOLITION. WHEN PERMITTED BY THE OWNER'S REPRESENTATIVE, ITEMS MAY BE REMOVED TO A SUITABLE, PROTECTED STORAGE LOCATION DURING SELECTIVE DEMOLITION AND THEN CLEANED AND REINSTALLED IN THEIR ORIGINAL LOCATIONS.
5. THE OWNER RESERVES THE RIGHT TO SALVAGE ANY ITEMS IDENTIFIED TO BE REMOVED. AT THE BEGINNING OF DEMOLITION WORK THE OWNER'S REPRESENTATIVE SHALL IDENTIFY ALL ITEMS TO BE SALVAGED.
6. DEMOLITION SHALL BE PERFORMED IN AN ORDERLY FASHION. ALL NECESSARY PRECAUTIONS SHALL BE TAKEN TO PROTECT EXISTING FACILITIES FROM DAMAGE DURING CONSTRUCTION.
7. ALL DEMOLITION AND CONSTRUCTION DEBRIS SHALL BE REMOVED BY THE CONTRACTOR THROUGH AN AUTHORIZED EPA WASTE CONTRACTOR.

LEGEND

- EXISTING TO REMAIN
- ITEM TO DEMOLISH
- PHOTO ORIENTATION

B	11/15/19 IGA PRICING	
A	10/11/19 IGA PRICING	

RECORD REVISIONS

SEAL

SIGNATURE DATE

ENTECH ENGINEERING
1.800.825.1372
www.entecheng.com
ENTECH # 5787.001

COMMONWEALTH OF PENNSYLVANIA
DEPARTMENT OF GENERAL SERVICES
HARRISBURG, PENNSYLVANIA

D.G.S. PROJECT No.
GESA 2018-1

GESA PROJECT
SCI HOUTZDALE
HOUTZDALE, CLEARFIELD COUNTY, PA

CENTRAL PLANT DEMO PLAN

VERIFY SCALE

BAR IS ONE (1) INCH LONG ON ORIGINAL DRAWING:
0 1
IF BAR IS NOT ONE (1) INCH LONG, ADJUST SCALE ACCORDINGLY

CONTRACTOR SHALL FIELD VERIFY ALL DIMENSIONS. VARIANCE FROM CONTRACT DOCUMENTS NOT PERMITTED WITHOUT PROFESSIONAL & BUREAU OF CONSTRUCTION APPROVAL.

DRAWN BY	DATE	DRAWING No.
MAR	10/11/2019	MD-101
CHECKED BY MDR	SCALE AS NOTED	7 OF 25

FILE PATH: H:\0005787.001\04-CAD\Sheetfiles\M-101.dwg
LAST SAVED: 2019.11.15 04:51 PM PLOTTED: 2019.11.15 05:02 PM PLOTTED BY: Michael Rissmiller

GENERAL DEMOLITION NOTES

1. REFER TO DRAWING MD-903 FOR PHOTOS.

LEGEND

EXISTING TO REMAIN

ITEM TO DEMOLISH

PHOTO ORIENTATION

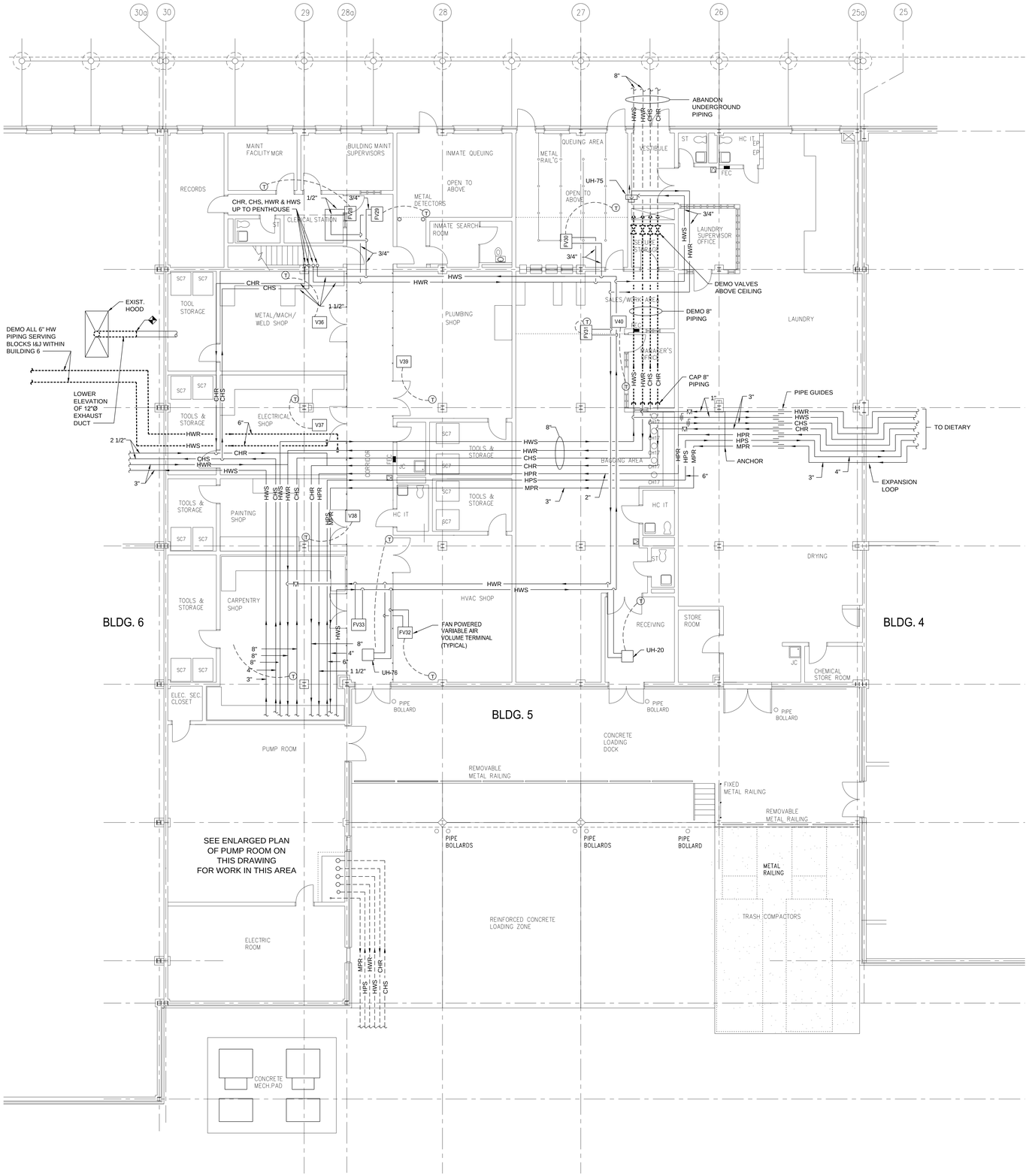

1 **BLDG. 5 - GROUND FLOOR DEMO PLAN**

Scale: 1/8" = 1'0"

0 4' 8' 16'

N

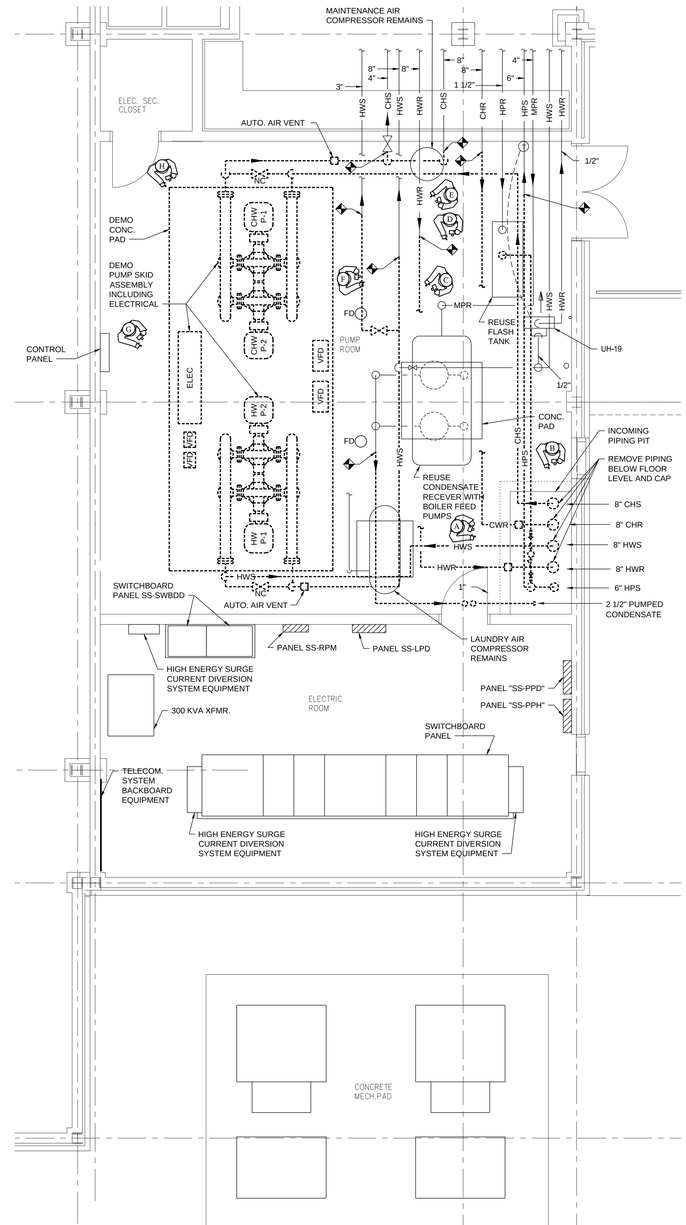

2 **PUMP ROOM - ENLARGED DEMO PLAN**

Scale: 1/4" = 1'0"

0 2' 4' 8'

N

VERIFY SCALE

BAR IS ONE (1) INCH LONG ON ORIGINAL DRAWING:

0 1

IF BAR IS NOT ONE (1) INCH LONG, ADJUST SCALE ACCORDINGLY

CONTRACTOR SHALL FIELD VERIFY ALL DIMENSIONS. VARIANCE FROM CONTRACT DOCUMENTS NOT PERMITTED WITHOUT PROFESSIONAL & BUREAU OF CONSTRUCTION APPROVAL.

B	11/15/19 IGA PRICING		
A	10/11/19 IGA PRICING		

RECORD REVISIONS

SEAL

SIGNATURE DATE

ENTECH ENGINEERING

1.800.825.1372
www.entecheng.com
ENTECH # 5787.001

COMMONWEALTH OF PENNSYLVANIA
DEPARTMENT OF GENERAL SERVICES
HARRISBURG, PENNSYLVANIA

D.G.S. PROJECT No.
GESA 2018-1

GESA PROJECT
SCI HOUTZDALE
HOUTZDALE, CLEARFIELD COUNTY, PA

BUILDING 5 DEMO PLAN

DRAWN BY	DATE	DRAWING No.
MAR	10/11/2019	MD-102
CHECKED BY	SCALE	
MDR	AS NOTED	8 OF 25

FILE PATH: H:\0005787.001\04-CAD\SheetFiles\M-102.dwg PLOTTED BY: Michael Rissmiller
LAST SAVED: 2019.11.15 04:25 PM PLOTTED: 2019.11.15 05:02 PM

A DEMO PROPANE TANK & EMISSIONS EQUIPMENT
Scale: NONE

B DEMO COOLING TOWERS, REUSE SUPPORTS
Scale: NONE

C DEMO COOLING TOWERS, REUSE SUPPORTS
Scale: NONE

D DEMO COOLING TOWERS, REUSE SUPPORTS
Scale: NONE

E DEMO PIPING DROPS TO UNDERGROUND
Scale: NONE

F DEMO CHW AND CW PUMPS
Scale: NONE

G DEMO CHW AND CW PUMPS
Scale: NONE

H DEMO B&W COAL BOILER #2
Scale: NONE

I RETAIN KEWANEE STEAM BOILER #3
Scale: NONE

J DEMO B&W COAL BOILER #1
Scale: NONE

K DEMO COAL BOILER FORCED DRAFT FAN
Scale: NONE

L DEMO COAL BOILER & ECONOMIZER
Scale: NONE

M DEMO AIR COMPRESSOR
Scale: NONE

N DEMO AIR COMPRESSOR
Scale: NONE

O DEMO AIR COMPRESSOR
Scale: NONE

P DEMO COAL BOILER & ECONOMIZER
Scale: NONE

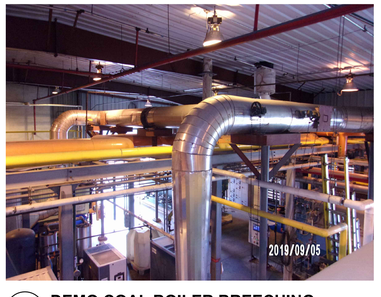

Q DEMO COAL BOILER BREECHING
Scale: NONE

R DEMO COAL BOILER FORCED DRAFT FAN
Scale: NONE

B	11/15/19 IGA PRICING	
A	10/11/19 IGA PRICING	

RECORD REVISIONS

SEAL

SIGNATURE DATE

ENTECH ENGINEERING
1.800.825.1372
www.entecheng.com
ENTECH # 5787.001

COMMONWEALTH OF PENNSYLVANIA
DEPARTMENT OF GENERAL SERVICES
HARRISBURG, PENNSYLVANIA

D.G.S. PROJECT No.
GESA 2018-1

GESA PROJECT
SCI HOUTZDALE
HOUTZDALE, CLEARFIELD COUNTY, PA

CENTRAL PLANT DEMO PHOTOS

VERIFY SCALE

BAR IS ONE (1) INCH LONG ON ORIGINAL DRAWING:
0 1
IF BAR IS NOT ONE (1) INCH LONG, ADJUST SCALE ACCORDINGLY

CONTRACTOR SHALL FIELD VERIFY ALL DIMENSIONS. VARIANCE FROM CONTRACT DOCUMENTS NOT PERMITTED WITHOUT PROFESSIONAL & BUREAU OF CONSTRUCTION APPROVAL.

DRAWN BY	DATE	DRAWING No.
MAR	10/11/2019	MD-901
CHECKED BY MDR	SCALE AS NOTED	9 OF 25

FILE PATH: H:\0005787.001\04-CAD\SheetFiles\MD-901.dwg PLOTTED: 2019.11.15 05:03 PM PLOTTED BY: Michael Rossmiller
LAST SAVED: 2019.11.15 04:52 PM

S **3 AIR COMPRESSORS TO REMAIN**
Scale: NONE

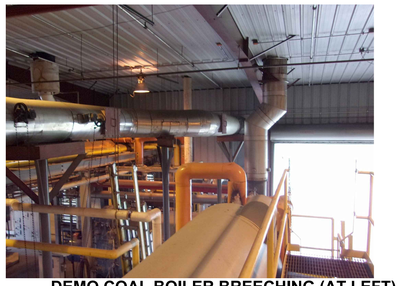

T **DEMO COAL BOILER BREECHING (AT LEFT) BOILER #3 BREECHING (AT RIGHT) TO REMAIN**
Scale: NONE

U **KEWANEE BOILER #3 TO REMAIN**
Scale: NONE

V **DEMO B&W COAL BOILER #2**
Scale: NONE

W **DEMO CHW AND CW PIPING**
Scale: NONE

X **DEMO COAL BOILER FORCED DRAFT FAN**
Scale: NONE

Y **DEMO HOT WATER PIPING**
Scale: NONE

Z **DEMO 3 CHILLERS**
Scale: NONE

AA **DEMO 3 CHILLERS**
Scale: NONE

BB **DEMO HOT WATER AIR SEPARATOR**
Scale: NONE

CC **DEMO CHILLER**
Scale: NONE

DD **DEMO HW PIPING @ HW PUMPS**
Scale: NONE

EE **DEMO HEAT EXCHANGERS**
Scale: NONE

FF **DEMO HOT WATER PUMPS**
Scale: NONE

GG **CONDENSATE SURGE TANK TO REMAIN**
Scale: NONE

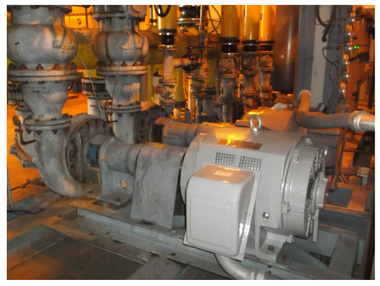

HH **DEMO HOT WATER PUMPS**
Scale: NONE

II **DEMO B&W COAL BOILER #2**
Scale: NONE

JJ **DEMO OIL REGULATORS FOR BOILER #2**
Scale: NONE

KK **DEMO DEAERATOR**
Scale: NONE

LL **OIL PUMPS TO REMAIN**
Scale: NONE

MM **DEMO WATER SOFTENER**
Scale: NONE

NN **DEMO OIL REGULATORS FOR BOILER #1**
Scale: NONE

OO **DEMO HOT WATER EXPANSION TANK**
Scale: NONE

B	11/15/19 IGA PRICING	
A	10/11/19 IGA PRICING	

RECORD REVISIONS

SEAL

SIGNATURE DATE

ENTECH ENGINEERING
1.800.825.1372
www.entecheng.com
ENTECH # 5787.001

COMMONWEALTH OF PENNSYLVANIA
DEPARTMENT OF GENERAL SERVICES
HARRISBURG, PENNSYLVANIA

D.G.S. PROJECT No.
GESA 2018-1

GESA PROJECT
SCI HOUTZDALE
HOUTZDALE, CLEARFIELD COUNTY, PA

CENTRAL PLANT DEMO PHOTOS

VERIFY SCALE
BAR IS ONE (1) INCH LONG ON ORIGINAL DRAWING:
0 1
IF BAR IS NOT ONE (1) INCH LONG, ADJUST SCALE ACCORDINGLY

CONTRACTOR SHALL FIELD VERIFY ALL DIMENSIONS. VARIANCE FROM CONTRACT DOCUMENTS NOT PERMITTED WITHOUT PROFESSIONAL & BUREAU OF CONSTRUCTION APPROVAL.

DRAWN BY	DATE	DRAWING No.
MAR	10/11/2019	MD-902
CHECKED BY MDR	SCALE AS NOTED	10 OF 25

FILE PATH: H:\0005787.001\04-CAD\SheetFiles\MD-901.dwg PLOTTED BY: Michael Rissmiller
LAST SAVED: 2019.11.15 04:52 PM PLOTTED: 2019.11.15 05:03 PM

A **DEMO INCOMING PIPE RISERS**
Scale: NONE

B **CUT AND CAP PIPING BELOW FLOOR LEVEL**
Scale: NONE

C **DEMO PUMP SKID AND CONCRETE PAD**
Scale: NONE

D **REUSE CONDENSATE TANK**
Scale: NONE

E **DEMO PUMPS AND SKID ASSEMBLY**
Scale: NONE

F **REUSE STEAM FLASH TANK**
Scale: NONE

G **DEMO PUMP SKID INCLUDING ELECTRICAL**
Scale: NONE

H **DEMO HW PUMP AND SKID ASSEMBLY**
Scale: NONE

B	11/15/19 IGA PRICING		
A	10/11/19 IGA PRICING		

RECORD REVISIONS

SEAL

SIGNATURE DATE

ENTECH ENGINEERING
1.800.825.1372
www.entecheng.com
ENTECH # 5787.001

COMMONWEALTH OF PENNSYLVANIA
DEPARTMENT OF GENERAL SERVICES
HARRISBURG, PENNSYLVANIA

D.G.S. PROJECT No.
GESA 2018-1

GESA PROJECT
SCI HOUTZDALE
HOUTZDALE, CLEARFIELD COUNTY, PA

BUILDING 5 DEMO PHOTOS

VERIFY SCALE

BAR IS ONE (1) INCH LONG ON ORIGINAL DRAWING:
0 1
IF BAR IS NOT ONE (1) INCH LONG, ADJUST SCALE ACCORDINGLY

CONTRACTOR SHALL FIELD VERIFY ALL DIMENSIONS. VARIANCE FROM CONTRACT DOCUMENTS NOT PERMITTED WITHOUT PROFESSIONAL & BUREAU OF CONSTRUCTION APPROVAL.

DRAWN BY	DATE	DRAWING No.
MAR	10/11/2019	MD-903
CHECKED BY MDR	SCALE AS NOTED	11 OF 25

FILE PATH: H:\0005787.001\04-CAD\SheetFiles\MD-901.dwg
LAST SAVED: 2019.11.15 04:52 PM PLOTTED: 2019.11.15 05:03 PM PLOTTED BY: Michael Rissmiller

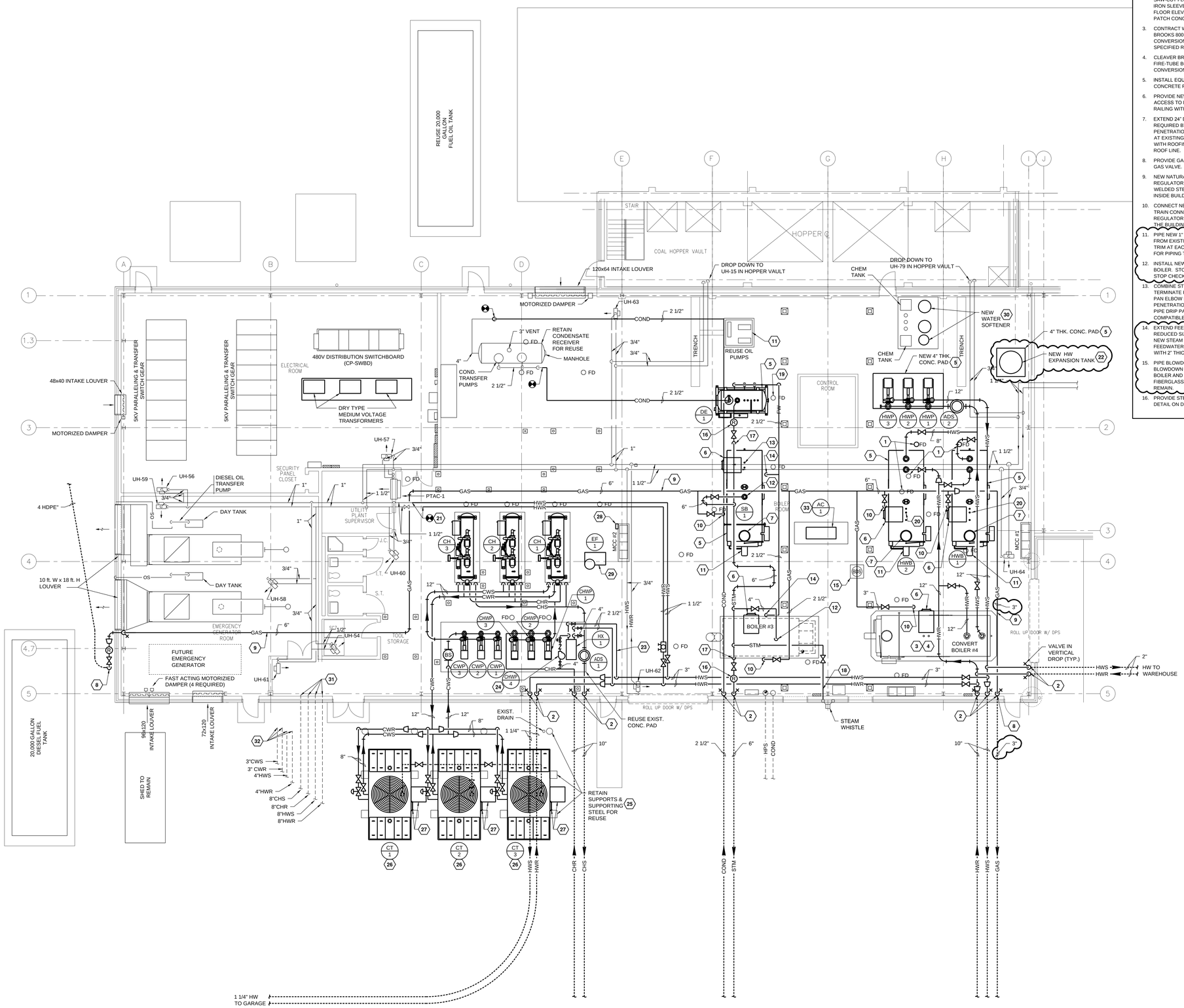

1 **MAINTENANCE SHOPS & CENTRAL PLANT - GROUND FLOOR PLAN**

Scale: 1/8" = 1'0"

SHEET KEYNOTES

1. RELOCATE EXISTING FLOOR DRAIN FROM EXISTING LOCATION TO NEW LOCATION. EXTEND EXISTING BRANCH PIPING TO NEW DRAIN LOCATION WITH SINGLE HUB CAST IRON PIPING. SAW-CUT FLOOR AND EXCAVATE. BACKFILL EXCAVATION WITH GRAVEL AND COMPACT. PATCH CONCRETE FLOOR.
2. INSTALL NEW PIPING THROUGH BUILDING SLAB AND FOUNDATION WALL. SAW-CUT FLOOR AND EXCAVATE. CORE FOUNDATION AND PROVIDE CAST IRON SLEEVE IF REQUIRED FOR STRUCTURAL STABILITY. PROVIDE SLEEVE AT FLOOR ELEVATION. BACKFILL EXCAVATION WITH GRAVEL AND COMPACT. PATCH CONCRETE FLOOR.
3. CONTRACT WITH CLEAVER BROOKS TO CONVERT THE EXISTING CLEAVER BROOKS 800 BHP STEAM BOILER #4 TO A HOT WATER BOILER. PROVIDE CONVERSION, NEW PIPING CONNECTIONS, AND NEW PARTS PER THE SPECIFIED REQUIREMENTS AND AS REQUIRED BY CLEAVER BROOKS.
4. CLEAVER BROOKS TO PERFORM A THOROUGH INSPECTION OF THE EXISTING FIRE-TUBE BOILER AND MAKE ANY REPAIRS AS PART OF HOT WATER CONVERSION.
5. INSTALL EQUIPMENT ON 4" HIGH CONCRETE PAD. REFER TO TYPICAL CONCRETE PAD DETAIL ON DRAWING M-602.
6. PROVIDE NEW LADDER AND PLATFORM ON NEW AND EXISTING BOILERS FOR ACCESS TO BOILER RELIEF VALVES. PROVIDE PLATFORM WITH 42" HIGH RAILING WITH KICK-PLATE ON BOTH SIDES.
7. EXTEND 24" DIA STACK THROUGH THE ROOF. INCLUDE OFFSETS AS MAY BE REQUIRED BY EXISTING ROOF STEEL. INCLUDE STACK SUPPORTS, ROOF PENETRATION, INSULATED THIMBLE, STACK CAP, AND WEATHER-PROOF BOOT AT EXISTING HYPALON ROOF. WEATHER-PROOF BOOT SHALL BE COMPATIBLE WITH ROOFING MATERIAL. EXTEND STACK MINIMUM 4 FEET ABOVE ADJACENT ROOF LINE.
8. PROVIDE GAS SERVICE TO BUILDING WITH ANODELESS RISER AND LOCKABLE GAS VALVE.
9. NEW NATURAL GAS PIPING INSIDE BUILDING AND UP TO PRESSURE REGULATOR SHALL BE WELDED STEEL WITH BUTT WELDED OR SOCKET WELDED STEEL FITTINGS. PROVIDE SWAY BRACING ON GAS PIPING LOCATED INSIDE BUILDING.
10. CONNECT NEW NATURAL GAS PIPING TO NEW AND EXISTING BOILER GAS TRAIN CONNECTIONS. PROVIDE SHUT-OFF VALVE AND PRESSURE REGULATOR AT EACH BOILER. VENT PRESSURE REGULATORS THROUGH THE BUILDING WALL TO THE OUTDOORS.
11. PIPE NEW 1" FUEL OIL SUPPLY (FOS) AND 1" FUEL OIL RETURN (FOR) PIPING FROM EXISTING OIL PUMPS AND EACH NEW BOILER BURNER. PROVIDE VALVE TRIM AT EACH BURNER PER DETAIL ON DRAWING M-602. EXISTING FOS AND FOR PIPING TO REMAIN.
12. INSTALL NEW STOP CHECK VALVE, WITH 300# FLANGES, ON NEW STEAM BOILER. STOP-CHECK VALVE FURNISHED WITH BOILER. REUSE EXISTING STOP CHECK VALVE ON BOILER #3.
13. COMBINE STEAM PRESSURE RELIEF VALVES AND PIPE UP THROUGH ROOF. TERMINATE RELIEF VALVE PIPING 6 FEET ABOVE ROOF LEVEL. INCLUDE DRIP PAN ELBOW FOR EACH STEAM RELIEF VALVE, PIPING SUPPORTS, ROOF PENETRATION, AND WEATHER-PROOF BOOT AT EXISTING HYPALON ROOF. PIPE DRIP PAN ELBOW TO FLOOR DRAIN. WEATHER-PROOF BOOT SHALL BE COMPATIBLE WITH ROOFING MATERIAL.
14. EXTEND FEEDWATER PIPING TO NEW FEEDWATER VALVE. INCLUDE MANUAL REDUCED SIZE BYPASS AROUND FEEDWATER VALVE. FEEDWATER VALVE FOR NEW STEAM BOILER SB-1 FURNISHED WITH BOILER. PROVIDE NEW FEEDWATER VALVE FOR STEAM BOILER #3. INSULATE FEEDWATER PIPING WITH 2" THICK FIBERGLASS INSULATION.
15. PIPE BLOWDOWN CONNECTIONS OF NEW STEAM BOILER SB-1 TO EXISTING BLOWDOWN SEPARATOR. BLOWDOWN VALVES SHALL BE FURNISHED WITH BOILER AND FIELD INSTALLED. INSULATE BLOWDOWN PIPING WITH 1" THICK FIBERGLASS INSULATION. BLOWDOWN CONNECTIONS TO BOILER #3 TO REMAIN.
16. PROVIDE STEAM PRESSURE REGULATING VALVE. REFER TO STEAM PRV DETAIL ON DRAWING M-602.

SHEET KEYNOTES CONT'D

17. PROVIDE STEAM TRAP ASSEMBLY AT DRIP LEG. PIPE HIGH PRESSURE DISCHARGE OF STEAM TRAP BACK TO HIGH TEMPERATURE RETURN CONNECTION ON DEAERATOR. REFER TO STEAM TRAP DETAIL ON DRAWING M-602. INSULATE STEAM TRAP DISCHARGE PIPING WITH 1" THICK FIBERGLASS INSULATION.
18. CONNECT NEW STEAM PIPING TO EXISTING STEAM WHISTLE.
19. EXTEND DEAERATOR STEAM AND OVERFLOW PIPING TO EXISTING FLOOR DRAIN. INSULATE PIPING WITH 1" THICK FIBERGLASS INSULATION.
20. PIPE EACH HW RELIEF VALVE TO NEAREST FLOOR DRAIN.
21. CONNECT NEW 1-1/2" HWS AND HWR PIPING TO EXISTING 1-1/ 2" HWS AND HWR PIPING SERVING CENTRAL PLANT HOT WATER HEATING SYSTEM.
22. PROVIDE NEW HOT WATER EXPANSION TANK. NEW TANK SHOULD BE SIMILAR IN SIZE TO THE EXISTING TANK. BOTH THE EXISTING AND NEW HOT WATER SYSTEMS WILL NEED TO REMAIN OPERATIONAL WHILE BUILDINGS ARE CHANGED OVER FROM THE EXISTING SYSTEM TO THE NEW SYSTEM. CONNECT EXPANSION TANK TO NEW HOT WATER SYSTEM PER FLOW DIAGRAM ON DRAWING M-601.
23. EXTEND HW AND CHW PIPING TO NEW CHILLED WATER FREEZE PROTECTION HEAT EXCHANGER. CONNECT TO HEAT EXCHANGER IN ACCORDANCE WITH DETAIL ON DRAWING M-602.
24. SUPPORT IN-LINE PUMP WITH VIBRATION ISOLATION HANGERS AND FLEXIBLE PUMP CONNECTIONS. REFER TO IN-LINE PUMP DETAIL ON DRAWING M-602.
25. REUSE EXISTING STEEL COOLING TOWER SUPPORTS AND OUTDOOR PIPE STANCHIONS FOR NEW COOLING TOWERS AND CONDENSER WATER PIPING. CLEAN, SPOT PRIME, AND FINISH PAINT STEEL SUPPORTS AND STANCHIONS PRIOR TO TOWER AND PIPING INSTALLATION. THOROUGHLY REMOVE ALL LOOSE PAINT AND RUST. PRIME BARE METAL. FINISH PAINT ENTIRE SUPPORT ASSEMBLY WITH A FINISH COAT OF EPOXY PAINT. COLOR: GRAY.
26. INSTALL NEW COOLING TOWERS ON EXISTING SUPPORTS. INSTALL ITEMS ON COOLING TOWERS THAT ARE SHIPPED LOOSE.
27. PROVIDE EACH COOLING TOWER WITH ACCESS LADDER, 36" SQUARE PLATFORM AT ACCESS DOOR, AND 42" HIGH RAILING WITH KICK-PLATE AROUND TOP OF COOLING TOWER. PROVIDE PARTIAL RAILING WITH KICK-PLATE AT PLATFORM. PROVIDE CAGE AT TOP SECTION OF LADDER, FROM 7 FEET ABOVE PLATFORM, EXTENDING TO 42" ABOVE TOP OF TOWER.
28. INSTALL REFRIGERANT MONITOR AND ALARM PANEL AT BACK OF EXISTING MCC. INCLUDE UNISTRUT SUPPORT STRUCTURE FOR PANEL. EXTEND REFRIGERANT SENSING LINES TO THE BOTTOM OF EACH CHILLER. GAS MONITOR SHALL BE BACHARACH MULTIZONE MODEL HGM-M2 OR APPROVED EQUAL. PROVIDE ALARM LIGHTS AND SIREN AND INTERLOCK GAS MONITOR OPERATION WITH EMERGENCY EXHAUST FAN.
29. INSTALL EMERGENCY EXHAUST FAN IN THIS LOCATION. NO CONCRETE PAD REQUIRED. EXTEND 24" DIA EXHAUST DUCT THROUGH ROOF AND TERMINATE WITH GOOSENECK WITH EXPANDED METAL ON DISCHARGE. INCLUDE SPRING ISOLATOR SUPPORTS, BACKDRAFT DAMPER AT FAN, FLEXIBLE DUCT CONNECTION AT DAMPER, DUCT SUPPORTS, ROOF PENETRATION, AND WEATHER-PROOF BOOT AT EXISTING HYPALON ROOF. WEATHER-PROOF BOOT SHALL BE COMPATIBLE WITH ROOFING MATERIAL.
30. INSTALL NEW DUPLEX WATER SOFTENER AND BRINE TANK IN LOCATION OF FORMER WATER SOFTENER. PROVIDE WATER SOFTENER WITH FULL SIZE BY-PASS. EXTEND SOFTENED WATER TO DEAERATOR, HOT WATER, AND CHILLED WATER MAKE-UP WATER CONNECTIONS. INSULATE MAKE-UP WATER PIPING WITH 1/2" THICK FIBERGLASS INSULATION.
31. REMOVE EXISTING PIPING THROUGH THE FLOOR AND CAP PIPING NEAR FLOOR LEVEL WHEN NEED FOR PIPING HAS PASSED.
32. REMOVE EXISTING PIPING TO AN ELEVATION MINIMUM 24" BELOW GRADE AND CAP EXISTING PIPING BELOW GRADE WHEN NEED FOR PIPING HAS PASSED. BACKFILL AND RESTORE LAWN IN THIS AREA.
33. PROVIDE AND INSTALL A NEW DUPLEX AIR COMPRESSOR WITH TANK. CONNECT NEW AIR COMPRESSOR TO EXISTING COMPRESSED AIR PIPING WITH FLEX CONNECTION AND BALL VALVE. REFER TO SCHEDULE ON DRAWING M-501 FOR COMPRESSOR DETAILS.

C	11/15/19 IGA PRICING	
B	10/25/19 IGA PRICING	
A	10/18/19 IGA PRICING	

RECORD REVISIONS

SEAL

SIGNATURE DATE

ENTECH ENGINEERING
1.800.825.1372
www.entecheng.com
ENTECH # 5787.001

COMMONWEALTH OF PENNSYLVANIA
DEPARTMENT OF GENERAL SERVICES
HARRISBURG, PENNSYLVANIA

D.G.S. PROJECT No.
GESA 2018-1

GESA PROJECT
SCI HOUTZDALE
HOUTZDALE, CLEARFIELD COUNTY, PA

CENTRAL PLANT PLAN

VERIFY SCALE

BAR IS ONE (1) INCH LONG ON ORIGINAL DRAWING:
0 1
IF BAR IS NOT ONE (1) INCH LONG, ADJUST SCALE ACCORDINGLY

CONTRACTOR SHALL FIELD VERIFY ALL DIMENSIONS. VARIANCE FROM CONTRACT DOCUMENTS NOT PERMITTED WITHOUT PROFESSIONAL & BUREAU OF CONSTRUCTION APPROVAL.

DRAWN BY	DATE	DRAWING No.
MAR	10/18/2019	M-101
CHECKED BY MDR	SCALE AS NOTED	12 OF 25

FILE PATH: H:\0005787.001\04-CAD\SheetFiles\M-101.dwg PLOTTED BY: Michael Rissmiller
LAST SAVED: 2019.11.15 04:51 PM PLOTTED: 2019.11.15 05:03 PM

GENERAL SHEET NOTES

1. INSULATE INTERIOR HOT WATER AND CHILLED WATER PIPING WITH 2" THICK (NOT 3" THICK) PIPE INSULATION WITH PVC FITTING COVERS. NO ALUMINUM JACKET REQUIRED.

SHEET KEYNOTES

1. RUN NEW PIPING ABOVE ROOF LEVEL AND CONNECT TO EXISTING PIPING NEAR CEILING OF PUMP ROOM. PROVIDE NEW RUBBER BOOT FITTING AT EACH ROOF PENETRATION. SEAL RUBBER ROOF AND PIPING BOOTS WATERTIGHT.
2. INSTALL PIPING CONNECTIONS TO MINIMIZE DOWNTIME OF HOT WATER AND STEAM HEATING SYSTEMS. PLAN CONNECTIONS TO LIMIT DOWNTIMES TO A SINGLE SHIFT.
3. FILL PIT WITH GRAVEL, COMPACT GRAVEL, AND CAP PIT WITH A 6" THICK CONCRETE CAP FLUSH WITH ADJACENT FLOOR. REMOVE SAFETY RAILING AROUND PIT.

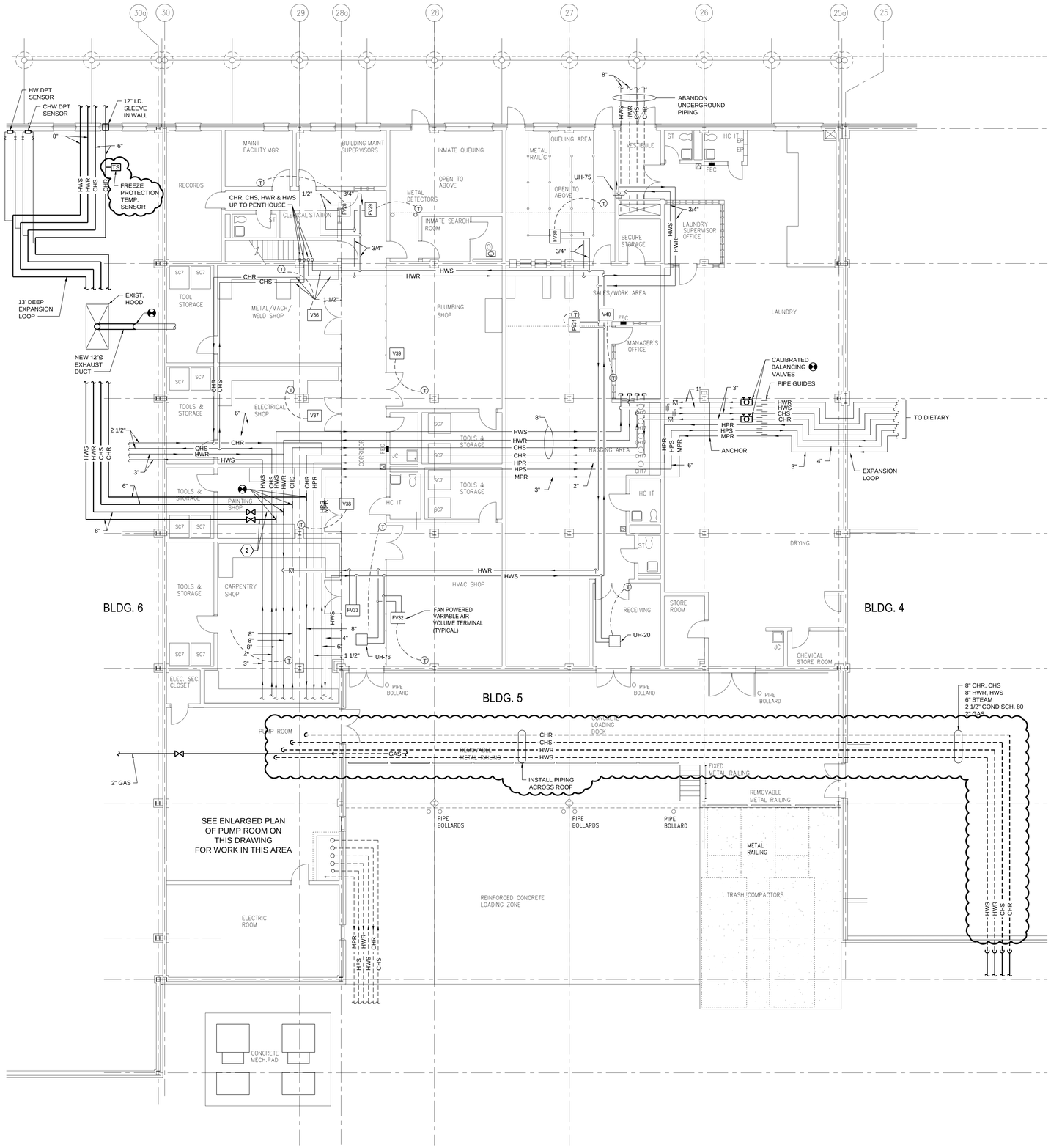

1 **BLDG. 5 - GROUND FLOOR PLAN**
Scale: 1/8" = 1'0"

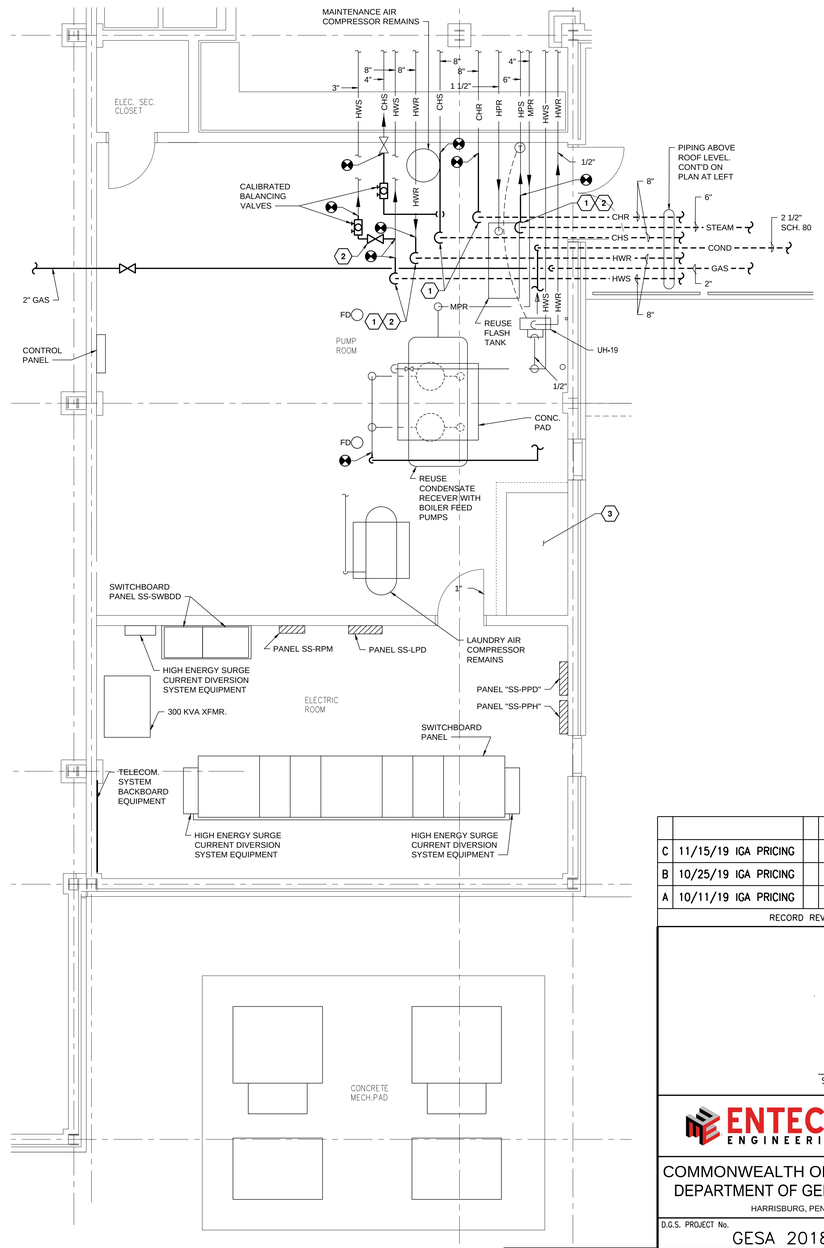

2 **PUMP ROOM - ENLARGED PLAN**
Scale: 1/4" = 1'0"

C	11/15/19 IGA PRICING		
B	10/25/19 IGA PRICING		
A	10/11/19 IGA PRICING		

RECORD REVISIONS

SEAL

SIGNATURE DATE

ENTECH ENGINEERING
1.800.825.1372
www.entecheng.com
ENTECH # 5787.001

COMMONWEALTH OF PENNSYLVANIA
DEPARTMENT OF GENERAL SERVICES
HARRISBURG, PENNSYLVANIA

D.G.S. PROJECT No.
GESA 2018-1

GESA PROJECT
SCI HOUTZDALE
HOUTZDALE, CLEARFIELD COUNTY, PA

BUILDING 5 PLAN

VERIFY SCALE
BAR IS ONE (1) INCH LONG ON ORIGINAL DRAWING:
0 1
IF BAR IS NOT ONE (1) INCH LONG, ADJUST SCALE ACCORDINGLY

CONTRACTOR SHALL FIELD VERIFY ALL DIMENSIONS. VARIANCE FROM CONTRACT DOCUMENTS NOT PERMITTED WITHOUT PROFESSIONAL & BUREAU OF CONSTRUCTION APPROVAL.

DRAWN BY	DATE	DRAWING No.
MAR	10/11/2019	M-102
CHECKED BY MDR	SCALE AS NOTED	13 OF 25

FILE PATH: H:\0052787.001\04-CAD\SheetFiles\M-102.dwg PLOTTED BY: Michael Rissmiller
LAST SAVED: 2019.11.15 04:25 PM PLOTTED: 2019.11.15 05:03 PM

GENERAL SHEET NOTES

1. INSULATE INTERIOR HOT WATER AND CHILLED WATER PIPING WITH 2" THICK (NOT 3" THICK) PIPE INSULATION WITH PVC FITTING COVERS. NO ALUMINUM JACKET REQUIRED.

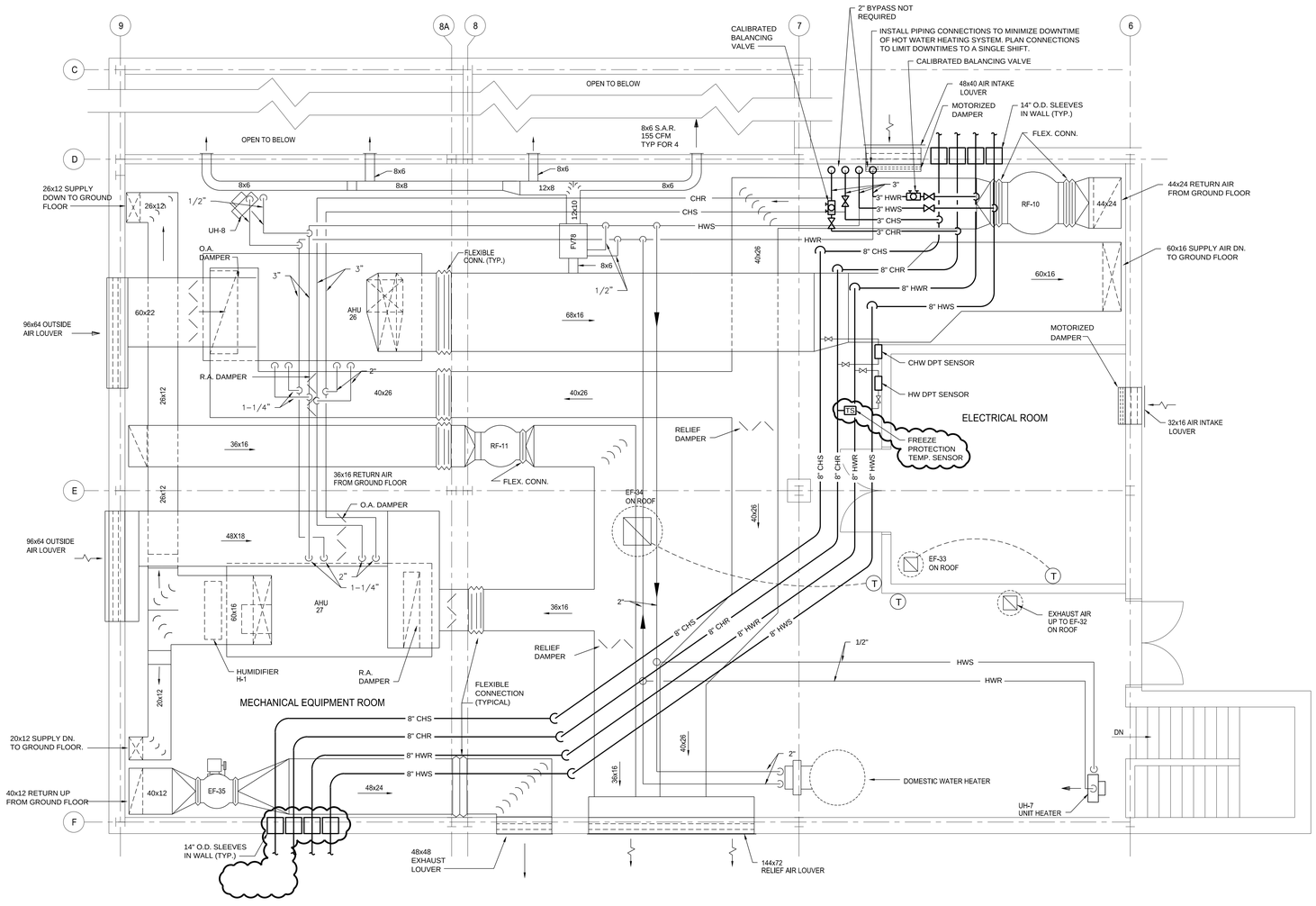

1 **BLDG. 2 - PENTHOUSE PLAN**

Scale: 1/4" = 1'0"

0 2' 4' 8'

N

C	11/15/19 IGA PRICING		
B	10/25/19 IGA PRICING		
A	10/11/19 IGA PRICING		

RECORD REVISIONS

SEAL

SIGNATURE DATE

ENTECH ENGINEERING

1.800.825.1372
www.entecheng.com
ENTECH # 5787.001

COMMONWEALTH OF PENNSYLVANIA
DEPARTMENT OF GENERAL SERVICES
HARRISBURG, PENNSYLVANIA

D.G.S. PROJECT No.
GESA 2018-1

GESA PROJECT
SCI HOUTZDALE
HOUTZDALE, CLEARFIELD COUNTY, PA

BUILDING 2 PENTHOUSE PLAN

VERIFY SCALE

BAR IS ONE (1) INCH LONG ON ORIGINAL DRAWING:

0 1

IF BAR IS NOT ONE (1) INCH LONG, ADJUST SCALE ACCORDINGLY

CONTRACTOR SHALL FIELD VERIFY ALL DIMENSIONS. VARIANCE FROM CONTRACT DOCUMENTS NOT PERMITTED WITHOUT PROFESSIONAL & BUREAU OF CONSTRUCTION APPROVAL.

DRAWN BY	DATE	DRAWING No.
MAR	10/11/2019	M-103
CHECKED BY MDR	SCALE AS NOTED	14 OF 25

FILE PATH: H:\0005787.001\04-CAD\SheetFiles\M-103.dwg PLOTTED BY: Michael Rissmiller
LAST SAVED: 2019.11.15 04:52 PM PLOTTED: 2019.11.15 05:03 PM

COOLING TOWER SCHEDULE

ITEM NO.	TOWER TYPE	CAPACITY (TONS)	EAT (WB)	CONDENSER WATER				FAN MOTOR HP	VOLTAGE	BASIS OF DESIGN		NOTES
				GPM	EWT	LWT	P.D.			MANUFACTURER	MODEL	
CT-1	ID CROSS FLOW	400	78	1200	95	85	12'	20	460/3/60	BAC	3000E	1,2,3,4,5,6
CT-2	ID CROSS FLOW	400	78	1200	95	85	12'	20	460/3/60	BAC	3000E	1,2,3,4,5,6
CT-3	ID CROSS FLOW	400	78	1200	95	85	12'	20	460/3/60	BAC	3000E	1,2,3,4,5,6

NOTES:

1. PROVIDE LADDER, PLATFORM AND RAILINGS.
2. PROVIDE STAINLESS STEEL HOT AND COLD WATER BASINS.
3. PROVIDE TWO 12KW BASIN HEATERS PER UNIT.
4. PROVIDE VARIABLE SPEED FAN DRIVE, INVERTER DUTY MOTOR W/ INTEGRAL DISCONNECT SWITCH & BACnet COMMUNICATIONS.
5. PROVIDE NEMA 3R TEMP CONTROL PANEL.
6. PROVIDE FACTORY START-UP.

CHILLER SCHEDULE

ITEM NO.	TYPE	CAPACITY (TONS)	MAX KW / TON	NPLV KW / TON	QTY COMPRESSORS	CHILLED WATER				CONDENSER WATER				VOLTAGE	BASIS OF DESIGN		NOTES
						GPM	EWT	LWT	P.D.	GPM	EWT	LWT	P.D.		MANUFACTURER	MODEL	
CH-1	CENTRIFUGAL	395	0.61	0.35	2 W/ VFD'S	650	57	42	14'	1200	85	95	16'	480/3/60	DAIKIN	WMC060DD	1,2,3,4,5,6,7
CH-2	CENTRIFUGAL	395	0.61	0.35	2 W/ VFD'S	650	57	42	14'	1200	85	95	16'	480/3/60	DAIKIN	WMC060DD	1,2,3,4,5,6,7
CH-3	CENTRIFUGAL	395	0.61	0.35	2 W/ VFD'S	650	57	42	14'	1200	85	95	16'	480/3/60	DAIKIN	WMC060DD	1,2,3,4,5,6,7

NOTES:

1. PROVIDE MAGNETIC BEARING CHILLER WITH VARIABLE FREQUENCY DRIVE.
2. PROVIDE THERMAL INSULATION ON EVAPORATOR, ETC.
3. PROVIDE BACnet COMMUNICATIONS PROTOCOL.
4. PROVIDE NEC POWER DISCONNECT SWITCH.
5. PROVIDE 65 KAIC SHORT CIRCUIT RATING.
6. PROVIDE EMI FILTER.
7. PROVIDE FACTORY START-UP.

TEN Scope based upon Carrier 23XRV having similar performance

STEAM BOILER SCHEDULE

ITEM NO.	BOILER TYPE	FUEL TYPE	NOMINAL SIZE	GROSS OUTPUT (MBH)	FLUE VENT DIA	BLOWER HP	VOLTAGE	BASIS OF DESIGN		NOTES
								MANUFACTURER	MODEL	
SB-1	FIRETUBE	GAS/OIL	350 BHP	12,000	24"	15	460/3/60	CLEAVER BROOKS	CBEX ELITE	1,2,3,4,5,6,7,8,9

NOTES:

1. PROVIDE 150 PSIG BOILER WITH 125 PSIG RELIEF VALVES.
2. PROVIDE BOILER WITH 9 PPM NATURAL GAS EMISSIONS LEVEL.
3. PROVIDE VFD BURNER CONTROL WITH TOUCHSCREEN CONTROL PANEL & BACnet COMMUNICATIONS.
4. PROVIDE MODULATING LINKAGE BURNER CONTROL.
5. PROVIDE SINGLE POINT POWER DISCONNECT SWITCH, NON-FUSED.
6. PROVIDE 250# NON-RETURN VALVE AND STEAM HEADER SPOOL PIECE.
7. PROVIDE FEEDWATER CONTROL VALVE.
8. PROVIDE BLOWDOWN VALVE PACKAGE.
9. PROVIDE FACTORY START-UP.

HOT WATER BOILER SCHEDULE

ITEM NO.	BOILER TYPE	FUEL TYPE	NOMINAL SIZE	GROSS OUTPUT (MBH)	FLUE VENT DIA	BLOWER HP	VOLTAGE	BASIS OF DESIGN		NOTES
								MANUFACTURER	MODEL	
HWB-1	FIRETUBE	GAS/OIL	350 BHP	12,000	24"	15	460/3/60	CLEAVER BROOKS	CBEX ELITE	1,2,3,4,5,6
HWB-2	FIRETUBE	GAS/OIL	350 BHP	12,000	24"	15	460/3/60	CLEAVER BROOKS	CBEX ELITE	1,2,3,4,5,6

NOTES:

1. PROVIDE 150 PSIG BOILER WITH 125 PSIG RELIEF VALVES.
2. PROVIDE BOILER WITH 9 PPM NATURAL GAS EMISSIONS LEVEL.
3. PROVIDE VFD BURNER CONTROL WITH TOUCHSCREEN CONTROL PANEL & BACnet COMMUNICATIONS.
4. PROVIDE MODULATING LINKAGE BURNER CONTROL.
5. PROVIDE SINGLE POINT POWER DISCONNECT SWITCH, NON-FUSED.
6. PROVIDE FACTORY START-UP.

PUMP SCHEDULE

ITEM NO.	SERVICE	TYPE	FLOW (GPM)	HEAD (FT)	CONNECTIONS		ELECTRIC MOTOR			BASIS OF DESIGN		NOTES
					INLET	OUTLET	HP	RPM	VOLTAGE	MANUFACTURER	SERIES	
CWP-1	CONDENSER WATER	END SUCTION	1200	60'	6"	5"	25	1750	460/3/60	BELL & GOSSETT	1510	1,2
CWP-2	CONDENSER WATER	END SUCTION	1200	60'	6"	5"	25	1750	460/3/60	BELL & GOSSETT	1510	1,2
CWP-3	CONDENSER WATER	END SUCTION	1200	60'	6"	5"	25	1750	460/3/60	BELL & GOSSETT	1510	1,2
CHWP-1	CHILLED WATER	END SUCTION	650	180'	5"	4"	60	3550	460/3/60	BELL & GOSSETT	1510	1,2,3
CHWP-2	CHILLED WATER	END SUCTION	650	180'	5"	4"	60	3550	460/3/60	BELL & GOSSETT	1510	1,2,3
CHWP-3	CHILLED WATER	END SUCTION	650	180'	5"	4"	60	3550	460/3/60	BELL & GOSSETT	1510	1,2,3
CHWP-4	CHILLED WATER	IN-LINE	300	50'	3"	3"	7 1/2	1750	460/3/60	BELL & GOSSETT	80	
HWP-1	HOT WATER	END SUCTION	700	180'	5"	4"	60	3550	460/3/60	BELL & GOSSETT	1510	1,2,4
HWP-2	HOT WATER	END SUCTION	700	180'	5"	4"	60	3550	460/3/60	BELL & GOSSETT	1510	1,2,4
HWP-3	HOT WATER	END SUCTION	700	180'	5"	4"	60	3550	460/3/60	BELL & GOSSETT	1510	1,2,4

NOTES:

1. PROVIDE VFD WITH INTEGRAL DISCONNECT SWITCH & BACnet COMMUNICATIONS.
2. PROVIDE TEFC INVERTOR DUTY MOTOR.
3. PUMP SIZE BASED ON A 15 DEGREE DELTA T PER THE ORIGINAL DESIGN DRAWINGS.
4. PUMP SIZE BASED ON A 40 DEGREE DELTA T PER THE ORIGINAL DESIGN DRAWINGS.

DEAERATOR SCHEDULE

ITEM NO.	MINIMUM STORAGE (GAL)	OUTPUT LB/HR	OPERATING PRESSURE (PSIG)	FEEDWATER PUMPS					BASIS OF DESIGN		NOTES
				QTY	GPM	HEAD	HP	VOLTAGE	MANUFACTURER	MODEL	
DE-1	415	20,000	5	3	50	320'	10	480/3/60	CLEAVER BROOKS	SM-30-415	1,2,3,4

NOTES:

1. PROVIDE COMPLETE WITH INSULATED TANK, TRIM, STAND, PRE-PIPED PUMPS AND CONTROLS IN NEMA 12 ENCLOSURE.
2. PROVIDE SINGLE POINT POWER DISCONNECT SWITCH, NON-FUSED.
3. PROVIDE EACH FEEDWATER PUMP COMPLETE WITH VFD.
4. PROVIDE FACTORY START-UP.

AIR COMPRESSOR SCHEDULE

ITEM NO.	TYPE	CAPACITY (SCFM)	WORKING PRESS	MOTOR HP	VOLTAGE	RECEIVER TANK		BASIS OF DESIGN		NOTES
						TYPE	CAPACITY	MANUFACTURER	MODEL	
AC-1	DUPLEX	32	175 PSI	10	460-3-60	HORIZ.	120 GAL.	GRAINGER	3SWC61	1

NOTES:

1. PROVIDE AUTOMATIC DRAIN VALVE.
2. PROVIDE AIR DRYER WITH COMPRESSOR.

HEAT EXCHANGER SCHEDULE

ITEM NO.	TYPE	CAPACITY (MBH)	HOT SIDE (SHELL SIDE)				COOL SIDE (TUBE SIDE)				BASIS OF DESIGN		NOTES
			GPM	EWT	LWT	P.D.	GPM	EWT	LWT	P.D.	MANUFACTURER	MODEL	
HX-1	PLATE AND FRAME	150	8	190	150	5'	300	39	40	12'	BELL & GOSSET	GPX	1

NOTES:

1. PROVIDE INSULATED STAINLESS STEEL SHROUD.

EXPANSION TANK SCHEDULE

ITEM NO.	SERVICE	MIN. TANK VOL. (GAL)	MIN. ACCEPT. VOLUME (GAL)	DIAMETER (INCHES)	HEIGHT (INCHES)	BASIS OF DESIGN	MODEL	NOTES
ET-1	CHILLED WATER	80	80	24"	4'-3"	BELL & GOSSETT	SERIES B	1,2
ET-2	HOT WATER	1000	1000	54"	10'-8"	BELL & GOSSETT	SERIES B	1,2

NOTES:

1. PROVIDE ASME RATING.
2. PROVIDE MANUFACTURERS RECOMMENDED FLOOR MOUNTING HARDWARE.

AIR ELIMINATOR AND DIRT SEPARATOR SCHEDULE

ITEM NO.	SERVICE	INLET SIZE (IN)	OUTLET SIZE (IN)	MAXIMUM (GPM)	BASIS OF DESIGN	MODEL	NOTES
ADS-1	CHILLED WATER	10"	10"	1600	BELL & GOSSETT	CRS-10F-HV	1,2,3
ADS-2	HOT WATER	12"	12"	1800	BELL & GOSSETT	CRS-12F	1,2,3

NOTES:

1. PROVIDE AIR VENT AND DRAIN VALVE WITH HOSE END CONNECTION.
2. PROVIDE WITH PIPE ROLL STANDS SUPPORTED FROM FINISHED FLOOR AT INLET AND OUTLET CHILLED WATER PIPE CONNECTIONS.
3. INSULATE WITH VAPOR-TIGHT INSULATION. THICKNESS AND TYPE TO MATCH ADJACENT PIPING.

FAN SCHEDULE

ITEM NO.	TYPE	MOUNTING	CFM	ESP (WC)	DRIVE	FAN RPM	MOTOR RATING	VOLTAGE	BASIS OF DESIGN		NOTE
									MANUFACTURER	MODEL	
EF-1	UTILITY	FLOOR	3500	.375"	BELT	523	3/4 HP	460/3/60	GREENHECK	USF	1,2,3

NOTES:

1. PROVIDE VIBRATION ISOLATION MOUNTS.
2. PROVIDE ACCESS DOOR, WEATHER COVER WITH OSHA BELT GUARD, DRAIN, FLANGED INLET, INLET AND OUTLET FLEX DUCT CONNECTION
3. PROVIDE INLET GRILLE.

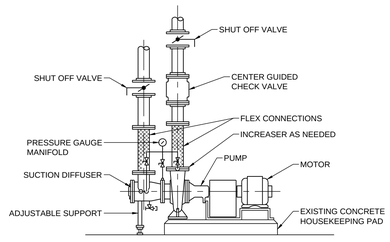

1 **BASE MOUNTED PUMP DETAIL**
Scale: NO SCALE

NOTE: INSTALL DIFFERENTIAL PRESSURE SENSOR ACROSS EACH PUMP AND WIRE BACK TO THE DDC SYSTEM.

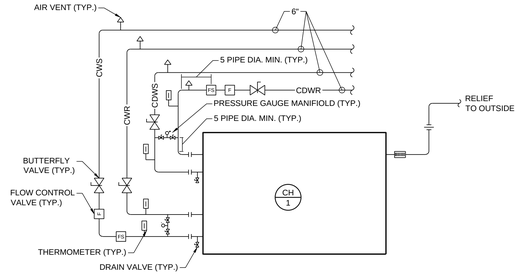

2 **CHILLER PIPING DETAIL**
Scale: NO SCALE

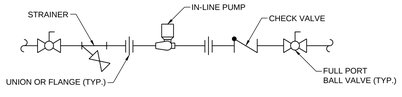

3 **IN-LINE PUMP DETAIL**
Scale: NO SCALE

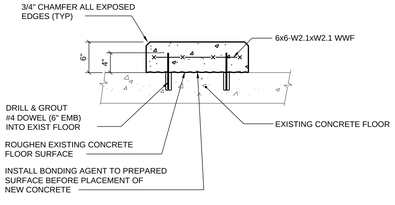

4 **TYPICAL CONCRETE PAD DETAIL**
Scale: NO SCALE

B	11/15/19 IGA PRICING		
A	10/25/19 IGA PRICING		

RECORD REVISIONS

SEAL

SIGNATURE DATE

ENTECH ENGINEERING
1.800.825.1372
www.entecheng.com
ENTECH # 5787.001

COMMONWEALTH OF PENNSYLVANIA
DEPARTMENT OF GENERAL SERVICES
HARRISBURG, PENNSYLVANIA

D.G.S. PROJECT No.
GESA 2018-1

GESA PROJECT
SCI HOUTZDALE
HOUTZDALE, CLEARFIELD COUNTY, PA

SCHEDULES AND DETAILS

VERIFY SCALE
BAR IS ONE (1) INCH LONG ON ORIGINAL DRAWING:
0 1
IF BAR IS NOT ONE (1) INCH LONG, ADJUST SCALE ACCORDINGLY

CONTRACTOR SHALL FIELD VERIFY ALL DIMENSIONS. VARIANCE FROM CONTRACT DOCUMENTS NOT PERMITTED WITHOUT PROFESSIONAL & BUREAU OF CONSTRUCTION APPROVAL.

DRAWN BY	DATE	DRAWING No.
MAR	10/25/2019	M-501
CHECKED BY MDR	SCALE AS NOTED	15 OF 25

FILE PATH: H:\0005787.001\04-CAD\SheetFiles\M-501.dwg
LAST SAVED: 2019.11.15 04:52 PM PLOTTED: 2019.11.15 05:03 PM PLOTTED BY: Michael Rissmiller

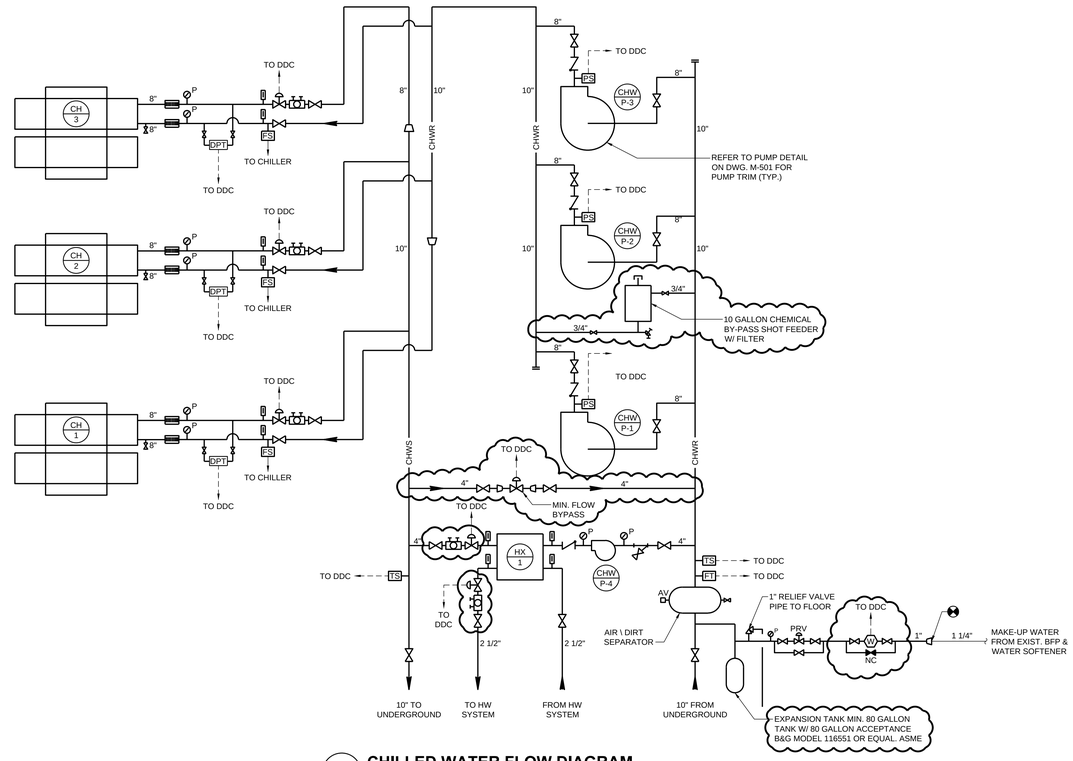

1 **CHILLED WATER FLOW DIAGRAM**
Scale: NONE

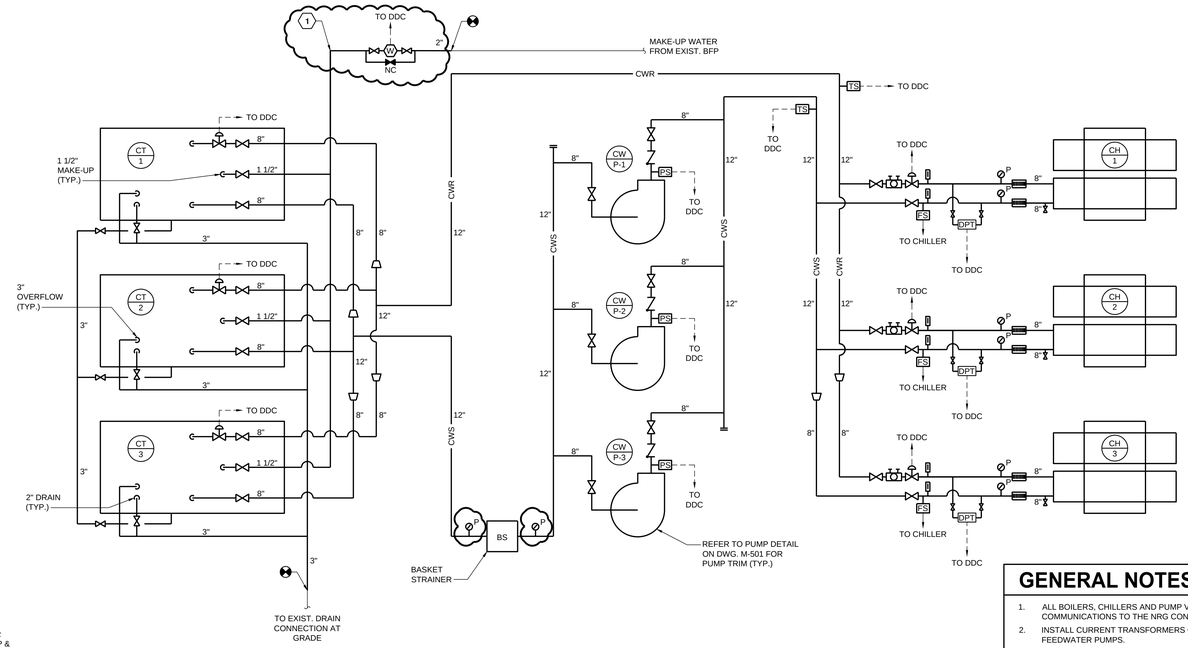

2 **CONDENSER WATER FLOW DIAGRAM**
Scale: NONE

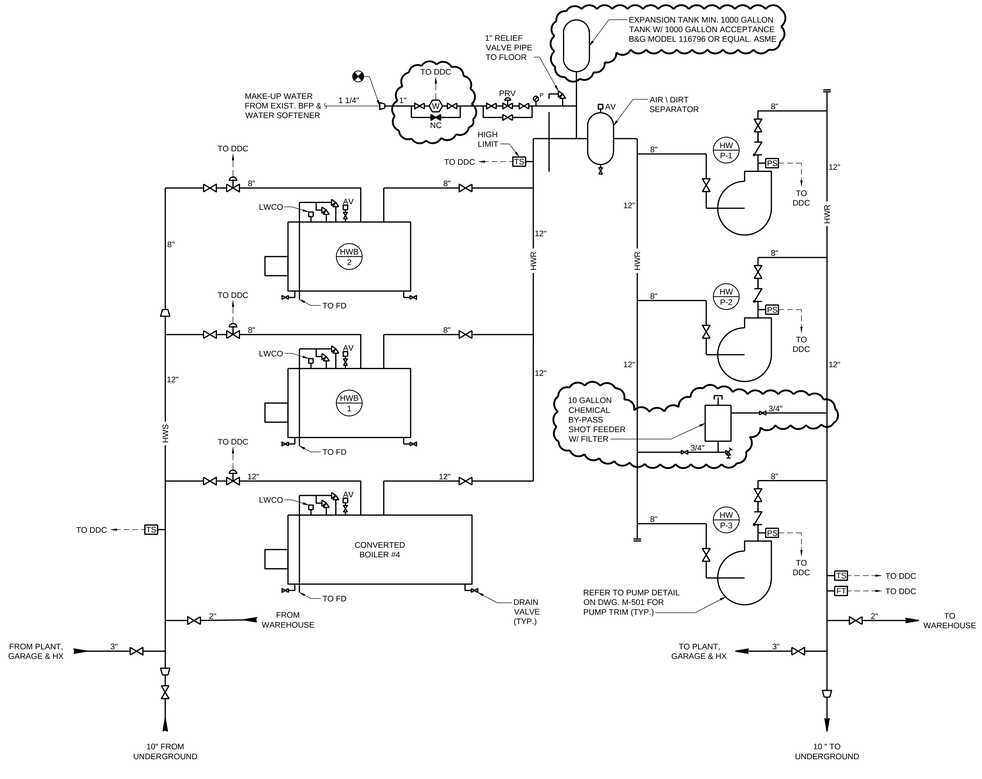

3 **HOT WATER FLOW DIAGRAM**
Scale: NONE

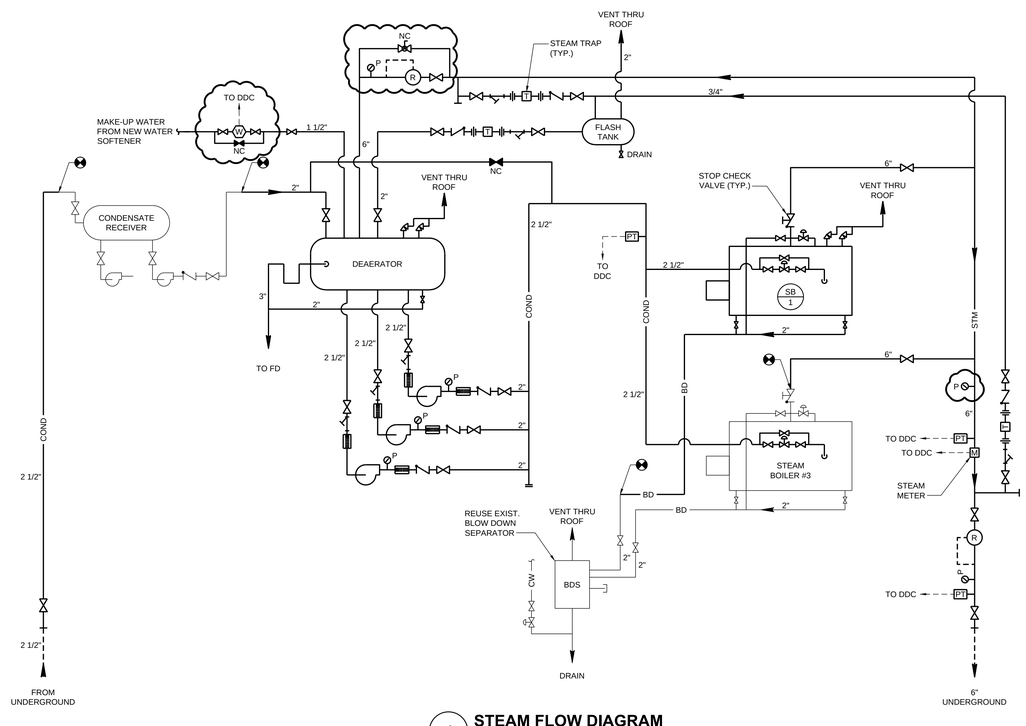

4 **STEAM FLOW DIAGRAM**
Scale: NONE

GENERAL NOTES

1. ALL BOILERS, CHILLERS AND PUMP VFD'S SHALL HAVE BACnet COMMUNICATIONS TO THE NRG CONTROLS SYSTEM.
2. INSTALL CURRENT TRANSFORMERS ON ALL PUMP MOTORS INCLUDING FEEDWATER PUMPS.
3. COMPLETE POINT LISTS FOR THESE SYSTEMS WILL BE INCLUDED IN THE DETAILED DESIGN.

SHEET KEYNOTES

1. ELECTRIC HEAT TRACE, INSULATE AND JACKET THE OUTDOOR MAKE-UP WATER PIPING TO THE COOLING TOWER.

LEGEND

AV	AUTOMATIC AIR VENT
TS	TEMPERATURE SENSOR
PS	PRESSURE SENSOR
FT	FLOW TRANSMITTER
M	STEAM FLOW METER
LWCO	LOW WATER CUT OFF
PT	PRESSURE TRANSMITTER
DPT	DIFFERENTIAL PRESSURE TRANSMITTER
	CONTROL VALVE
	THERMOMETER
	PRESSURE GAUGE
	BALANCING VALVE
NC	NORMALLY CLOSED
W	WATER METER

B	11/15/19 IGA PRICING	
A	10/28/19 IGA PRICING	

RECORD REVISIONS

SEAL

SIGNATURE DATE

ENTECH ENGINEERING
1.800.825.1372
www.entecheng.com
ENTECH # 5787.001

COMMONWEALTH OF PENNSYLVANIA
DEPARTMENT OF GENERAL SERVICES
HARRISBURG, PENNSYLVANIA

D.G.S. PROJECT No.
GESA 2018-1

GESA PROJECT
SCI HOUTZDALE
HOUTZDALE, CLEARFIELD COUNTY, PA

FLOW DIAGRAMS

VERIFY SCALE
BAR IS ONE (1) INCH LONG ON ORIGINAL DRAWING:
0 1
IF BAR IS NOT ONE (1) INCH LONG, ADJUST SCALE ACCORDINGLY

CONTRACTOR SHALL FIELD VERIFY ALL DIMENSIONS. VARIANCE FROM CONTRACT DOCUMENTS NOT PERMITTED WITHOUT PROFESSIONAL & BUREAU OF CONSTRUCTION APPROVAL.

DRAWN BY	DATE	DRAWING No.
MAR	10/28/2019	M-601
CHECKED BY	SCALE	
MDR	AS NOTED	16 OF 25

FILE PATH: H:\0002587.001\04-CAD\SheetFiles\M-601.dwg PLOTTED BY: Michael Rosmiller
LAST SAVED: 2019.11.14 02:15 PM PLOTTED: 2019.11.15 05:03 PM

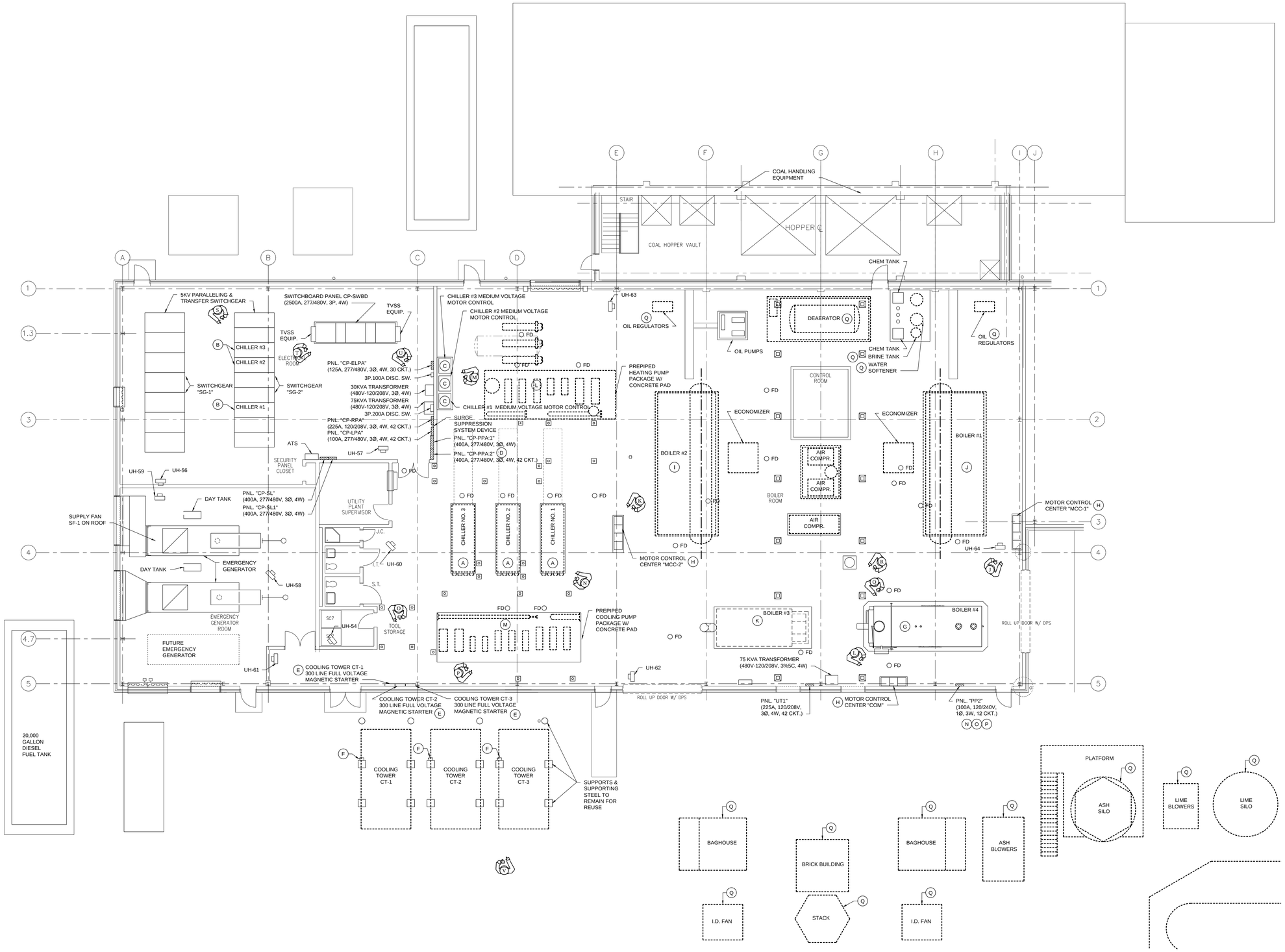

1 **CENTRAL PLANT DEMOLITION POWER PLAN**

Scale: 1/8" = 1'0"

0 4' 8' 16'

SHEET NOTES

1. REFER TO DRAWING CS-1 FOR SHEET INDEX.
2. REFER TO DRAWING ED-601 FOR CENTRAL PLANT 5KV DEMOLITION ONE LINE DIAGRAM.
3. REFER TO DRAWING ED-602 FOR CENTRAL PLANT 480V DEMOLITION ONE LINE DIAGRAM.
4. REFER TO DRAWING ED-901 FOR CENTRAL PLANT & BLDG. #5 DEMO PHOTOS.

○ DEMOLITION KEYNOTES

A. EXISTING CHILLER TO BE REMOVED UNDER MECHANICAL SCOPE OF WORK. DISCONNECT & REMOVE EXISTING BRANCH CIRCUIT WIRING ROUTED FROM DISTRIBUTION SWITCHGEAR "SG-2", THROUGH MEDIUM VOLTAGE MOTOR CONTROL EQUIPMENT, TO CHILLER SCHEDULED FOR DEMOLITION. EXISTING CONDUIT ROUTED WITHIN FLOOR FROM MEDIUM VOLTAGE MOTOR CONTROL EQUIPMENT TO CHILLER SHALL BE REUSED FOR NEW FEEDER. REMAINING CONDUIT ROUTED FROM SWITCHGEAR "SG-2" TO MEDIUM VOLTAGE CONTROL EQUIPMENT SHALL BE ABANDONED IN PLACE. REFER TO PHOTO "N" ON DRAWING ED-901.

B. EXISTING METAL CLAD SWITCHGEAR BREAKER (MFR.: SQUARE D METAL CLAD SWITCHGEAR) CURRENTLY SERVING CENTRAL PLANT CHILLER SHALL REMAIN FOR RE-USE. REFER TO PHOTO "S" ON DRAWING ED-901.

C. DISCONNECT & REMOVE EXISTING CHILLER MEDIUM VOLTAGE MOTOR CONTROL EQUIPMENT (MFR.: WESTINGHOUSE AMPGARD) AND ASSOCIATED CONCRETE PAD. CHILLER FEEDER CONDUITS WITHIN FLOOR SHALL BE EXPOSED FOR RE-USE. REFER TO PHOTO "M" ON DRAWING ED-901.

D. DISCONNECT AND REMOVE EXISTING BRANCH CIRCUIT WIRING ROUTED FROM CIRCUIT BREAKERS "CP-PPA:2-1" (3P.60A C/B), "CP-PPA:2-7" (3P.60A C/B), "CP-PPA:2-13" (3P.60A C/B) CURRENTLY SERVING EXTERIOR COOLING TOWERS CT-1, CT-2, & CT-3. EXISTING CIRCUIT BREAKERS AND ASSOCIATED CONDUIT SHALL REMAIN FOR RE-USE WITH NEW COOLING TOWER INSTALLATION. REFER TO PHOTO "U" ON DRAWING ED-901.

E. DISCONNECT & REMOVE EXISTING COOLING TOWER FULL VOLTAGE MAGNETIC STARTER AND ASSOCIATED WIRING BACK TO PANEL "CP-PPA2" (LOCATED WITHIN ELECTRIC ROOM) AND EXTERIOR COOLING TOWER. CONDUITS SHALL REMAIN FOR REUSE. REFER TO PHOTO "O" ON DRAWING ED-901.

F. DISCONNECT & REMOVE EXISTING 3P.60A NEMA 3R DISCONNECT SWITCH AND ASSOCIATED WIRING TO COOLING TOWER AND BACK TO PANEL "CP-PPA:2". CONDUIT FROM DISCONNECT SWITCH BACK TO PANEL "CP-PPA:2" SHALL REMAIN FOR REUSE. REFER TO PHOTO "U" AND PHOTO "V" ON DRAWING ED-901.

G. EXISTING BOILER #4 SHALL REMAIN. REFER TO PHOTO "Q" ON DRAWING ED-901.

H. REFER TO DRAWING ED-602 FOR MOTOR CONTROL CENTER EQUIPMENT DEMOLITION REQUIREMENTS.

I. EXISTING BOILER TO BE REMOVED UNDER MECHANICAL SCOPE OF WORK. DISCONNECT & REMOVE ASSOCIATED WIRING BACK TO SOURCE. EXISTING CONDUITS SHALL REMAIN FOR REUSE WITH NEW BOILER INSTALLATION.

J. EXISTING BOILER TO BE REMOVED. DISCONNECT & REMOVE ALL ASSOCIATED ELECTRICAL EQUIPMENT, CONDUIT, & WIRING BACK TO SOURCE.

K. EXISTING BOILER TO BE REMOVED UNDER MECHANICAL SCOPE OF WORK. DISCONNECT & REMOVE ASSOCIATED CONDUIT & WIRING BACK TO SOURCE. CONDUITS ROUTED WITHIN FLOOR SHALL BE CUT FLUSH WITH FLOOR AND GROUTED SHUT. THIS DEMOLITION WORK SHALL BE COMPLETED AT THE END OF THE PROJECT. REFER TO PHOTO "R" ON DRAWING ED-901.

L. EXISTING HOT WATER PUMPS TO BE REMOVED UNDER MECHANICAL SCOPE OF WORK. DISCONNECT & REMOVE ELECTRICAL EQUIPMENT (INCLUDING STARTERS, WIREWAYS, DISCONNECT SWITCHES, VFD'S, ETC.) AND ASSOCIATED CONDUIT & WIRING BACK TO SWITCHBOARD "CP-SWBD". CONDUIT ROUTED WITHIN FLOOR SHALL BE CUT FLUSH WITH FLOOR AND GROUTED SHUT. THIS DEMOLITION WORK SHALL BE COMPLETED AT THE END OF THE PROJECT.

M. EXISTING CHILLED WATER PUMPS TO BE REMOVED UNDER MECHANICAL SCOPE OF WORK. DISCONNECT & REMOVE ELECTRICAL EQUIPMENT (INCLUDING STARTERS, WIREWAYS, DISCONNECT SWITCHES, VFD'S, ETC.) AND ASSOCIATED WIRING BACK TO SWITCHBOARD "CP-SWBD". EXISTING CONDUIT ROUTED FROM SWITCHBOARD "CP-SWBD" SHALL REMAIN FOR REUSE WITH NEW CHILLED WATER PUMP INSTALLATION. REFER TO PHOTO "P" ON DRAWING ED-901.

N. DISCONNECT & REMOVE EXISTING BRANCH CIRCUIT WIRING ASSOCIATED WITH BOILER #1 (TOTAL OF TWO). EXISTING CONDUIT SHALL REMAIN FOR REUSE WITH NEW BOILER INSTALLATION. INDIVIDUAL CIRCUIT BREAKERS SHALL BE LABELED AS SPARE UNLESS UTILIZED WITH NEW BOILER INSTALLATION.

O. EXISTING BRANCH CIRCUIT CONDUIT & WIRING ASSOCIATED WITH BOILER #2 SHALL BE ABANDONED IN PLACE. INDIVIDUAL CIRCUIT BREAKERS SERVING CIRCUITS ASSOCIATED WITH BOILER #2 SHALL BE LOCKED AND TAGGED OUT (TOTAL OF TWO).

P. DISCONNECT & REMOVE EXISTING BRANCH CIRCUIT CONDUIT & WIRING ASSOCIATED WITH BOILER #3 (TOTAL OF TWO). CONDUIT ROUTED WITHIN FLOOR SHALL BE CUT FLUSH WITH FLOOR AND GROUTED SHUT. INDIVIDUAL CIRCUIT BREAKERS SHALL BE LABELED AS SPARE WITHIN PANEL.

Q. EQUIPMENT/STRUCTURE TO BE REMOVED UNDER MECHANICAL SCOPE OF WORK. DISCONNECT & REMOVE ALL EXISTING ELECTRICAL EQUIPMENT, CONDUIT, & WIRING BACK TO SOURCE.

C	11/15/19 IGA PRICING	
B	11/7/19 IGA PRICING	
A	10/11/19 IGA PRICING	

RECORD REVISIONS

SEAL

SIGNATURE DATE

ENTECH ENGINEERING
1.800.825.1372
www.entecheng.com
ENTECH # 5787.001

COMMONWEALTH OF PENNSYLVANIA
DEPARTMENT OF GENERAL SERVICES
HARRISBURG, PENNSYLVANIA

D.G.S. PROJECT No.
GESA 2018-1

GESA PROJECT
SCI HOUTZDALE
HOUTZDALE, CLEARFIELD COUNTY, PA

CENTRAL PLANT DEMOLITION POWER PLAN

VERIFY SCALE

BAR IS ONE (1) INCH LONG ON ORIGINAL DRAWING:
0 1
IF BAR IS NOT ONE (1) INCH LONG, ADJUST SCALE ACCORDINGLY

CONTRACTOR SHALL FIELD VERIFY ALL DIMENSIONS. VARIANCE FROM CONTRACT DOCUMENTS NOT PERMITTED WITHOUT PROFESSIONAL & BUREAU OF CONSTRUCTION APPROVAL.

DRAWN BY	DATE	DRAWING No.
SCH	10/11/2019	ED-101
CHECKED BY DEM	SCALE AS NOTED	17 OF 25

FILE PATH: H:\0005787.001\04-CAD\SheetFiles\ED-101-E-101.dwg PLOTTED BY: Michael Rissmiller
LAST SAVED: 2019.11.15 04:46 PM PLOTTED: 2019.11.15 05:04 PM

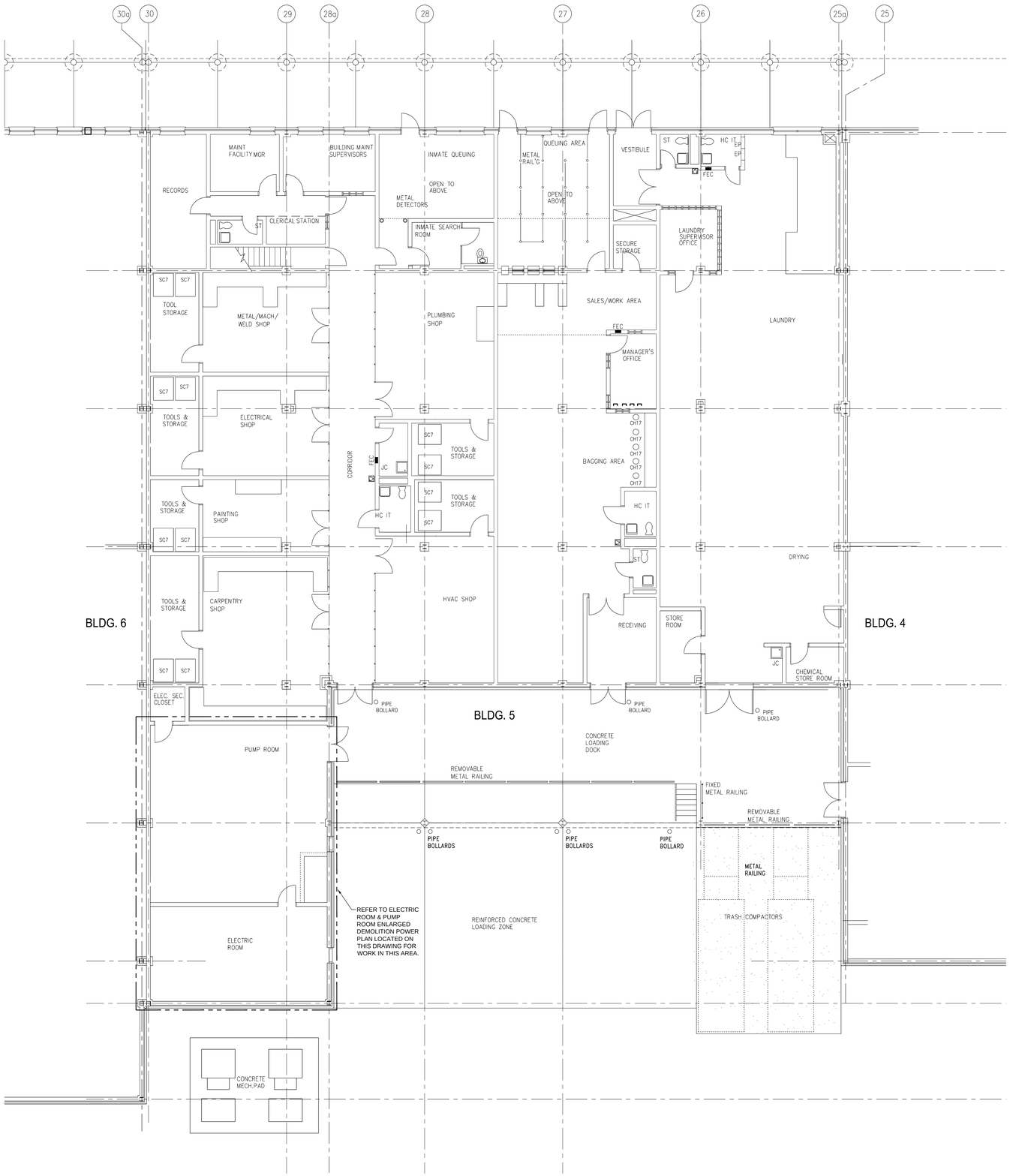

1 **BLDG. #5 - GROUND FLOOR DEMOLITION POWER PLAN**

Scale: 1/8" = 1'0"

0 4' 8' 16'

N

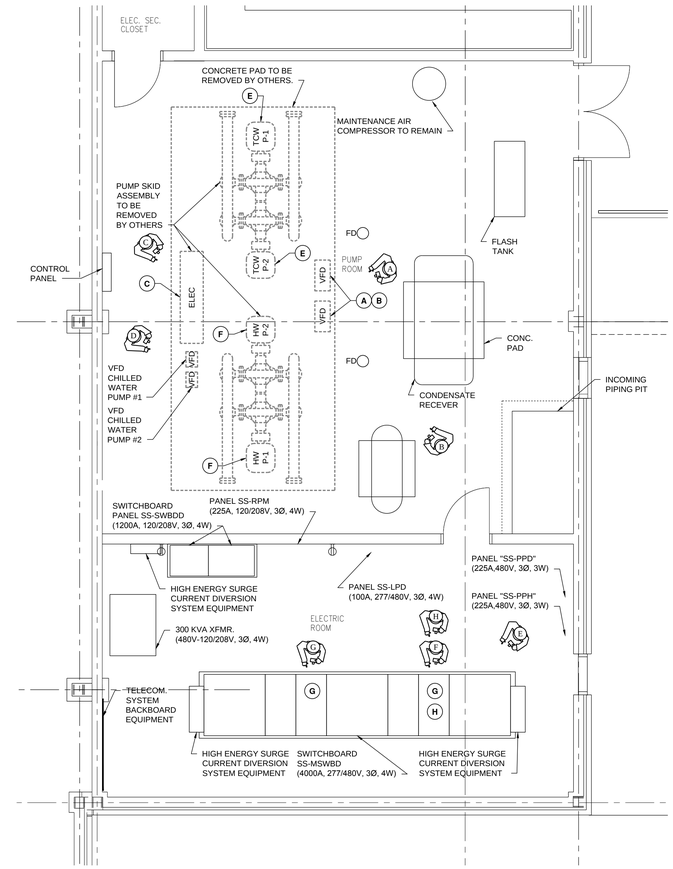

2 **ELECTRIC ROOM & PUMP ROOM ENLARGED DEMOLITION POWER PLAN**

Scale: 1/4" = 1'0"

0 2' 4' 8'

N

SHEET NOTES

1. REFER TO DRAWING CS-1 FOR SHEET INDEX.
2. REFER TO DRAWING ED-603 FOR BLDG. #5 DEMOLITION ONE LINE DIAGRAM.
3. REFER TO DRAWING ED-901 FOR CENTRAL PLANT & BLDG. #5 DEMO PHOTOS.

○ DEMOLITION KEYNOTES

A. DISCONNECT & REMOVE VARIABLE SPEED DRIVE #1 & DRIVE #2 AND ASSOCIATED SUPPORT, CONDUIT, & WIRING FOR HOT WATER PUMPS HW P-1 & HW P-2. REFER TO DRAWING ED-901 PHOTO "A" FOR VARIABLE SPEED DRIVE UNITS.

B. DISCONNECT AND REMOVE EXISTING CONDUCTORS SERVING HOT WATER PUMPS HW P-1 & HW P-2 BACK TO SWITCHBOARD SS-MSWBD. EXISTING CONDUIT SHALL BE CUT FLUSH WITH FLOOR AND ABANDONED IN PLACE. REFER TO DRAWING ED-901 PHOTO "B" FOR CONDUIT ENTRY LOCATION AT EACH VARIABLE FREQUENCY DRIVE UNIT.

C. DISCONNECT & REMOVE DISCONNECT SWITCHES AND ASSOCIATED WIRING SERVING CHILLED WATER PUMPS TCW P-1 AND TCW P-2 BACK TO SWITCHBOARD SS-MSWBD (INCLUDING MAIN DISCONNECT SWITCH AND SPARE DISCONNECT SWITCHES). EXISTING CONDUIT SHALL BE CUT FLUSH WITH FLOOR AND ABANDONED IN PLACE. REFER TO DRAWING ED-901 PHOTO "C" FOR DISCONNECT SWITCH EQUIPMENT AND CONDUIT ENTRY LOCATIONS FOR EACH DISCONNECT SWITCH.

D. DISCONNECT & REMOVE VARIABLE SPEED DRIVE UNITS AND ASSOCIATED SUPPORT, CONDUIT, & WIRING FOR CHILLED WATER PUMPS TCW P-1 AND TCW P-2. REFER TO DRAWING ED-901 PHOTO "D" FOR VARIABLE SPEED DRIVE UNITS.

E. CHILLED WATER PUMPS TCW P-1 AND TCW P-2 (EACH PUMP: 75 HP, 480V, 3Ø) SHALL BE REMOVED UNDER MECHANICAL SCOPE OF WORK.

F. HOT WATER PUMPS HW P-1 & HW P-2 (EACH PUMP 125 HP, 480V, 3Ø) SHALL BE REMOVED UNDER MECHANICAL SCOPE OF WORK.

G. CIRCUIT BREAKERS CURRENTLY SERVING HOT WATER PUMPS HW P-1 & HW P-2 SHALL BE LABELED AS SPARE. REFER TO DRAWING ED-603 FOR BLDG. #5 DEMOLITION ONE LINE DIAGRAM.

H. CIRCUIT BREAKER CURRENTLY SERVING CHILLED WATER PUMPS TCW P-1 & TCW P-2 SHALL BE LABELED AS SPARE. REFER TO DRAWING ED-603 FOR BLDG. #5 DEMOLITION ONE LINE DIAGRAM.

B	11/15/19 IGA PRICING	
A	10/11/19 IGA PRICING	

RECORD REVISIONS

SEAL

SIGNATURE DATE

ENTECH ENGINEERING
1.800.825.1372
www.entecheng.com
ENTECH # 5787.001

COMMONWEALTH OF PENNSYLVANIA
DEPARTMENT OF GENERAL SERVICES
HARRISBURG, PENNSYLVANIA

D.G.S. PROJECT No.
GESA 2018-1

GESA PROJECT
SCI HOUTZDALE
HOUTZDALE, CLEARFIELD COUNTY, PA

BUILDING #5 GROUND FLOOR DEMOLITION POWER PLAN

VERIFY SCALE

BAR IS ONE (1) INCH LONG ON ORIGINAL DRAWING:
0 1
IF BAR IS NOT ONE (1) INCH LONG, ADJUST SCALE ACCORDINGLY

CONTRACTOR SHALL FIELD VERIFY ALL DIMENSIONS. VARIANCE FROM CONTRACT DOCUMENTS NOT PERMITTED WITHOUT PROFESSIONAL & BUREAU OF CONSTRUCTION APPROVAL.

DRAWN BY	DATE	DRAWING No.
SCH	10/11/2019	ED-102
CHECKED BY DEM	SCALE AS NOTED	18 OF 25

FILE PATH: H:\0005787.001\04-CAD\SheetFiles\ED-102-E-102.dwg PLOTTED BY: Michael Rissmiller
LAST SAVED: 2019.11.15 04:50 PM PLOTTED: 2019.11.15 05:04 PM

SHEET NOTES

1. REFER TO DRAWING CS-1 FOR SHEET INDEX.
2. REFER TO DRAWING ED-101 FOR CENTRAL PLANT DEMOLITION POWER PLAN.
3. REFER TO DRAWING ED-901 FOR CENTRAL PLANT & BLDG. #5 DEMO PHOTOS.

◯ DEMOLITION KEYNOTES

A. DISCONNECT & REMOVE EXISTING BRANCH CIRCUIT WIRING AND ASSOCIATED FLOOR MOUNTED MEDIUM VOLTAGE MOTOR CONTROL EQUIPMENT FROM DISTRIBUTION SWITCHGEAR "SG-2" TO CHILLER SCHEDULED FOR DEMOLITION. CONDUIT ROUTED WITHIN FLOOR FROM SWITCHGEAR "SG-2" TO MEDIUM VOLTAGE MOTOR CONTROL EQUIPMENT SHALL BE ABANDONED IN PLACE. CONDUIT ROUTED WITHIN FLOOR FROM MEDIUM VOLTAGE MOTOR CONTROL EQUIPMENT TO THE CHILLER SHALL BE RE-USED WITH NEW CHILLER FEEDER WIRING.

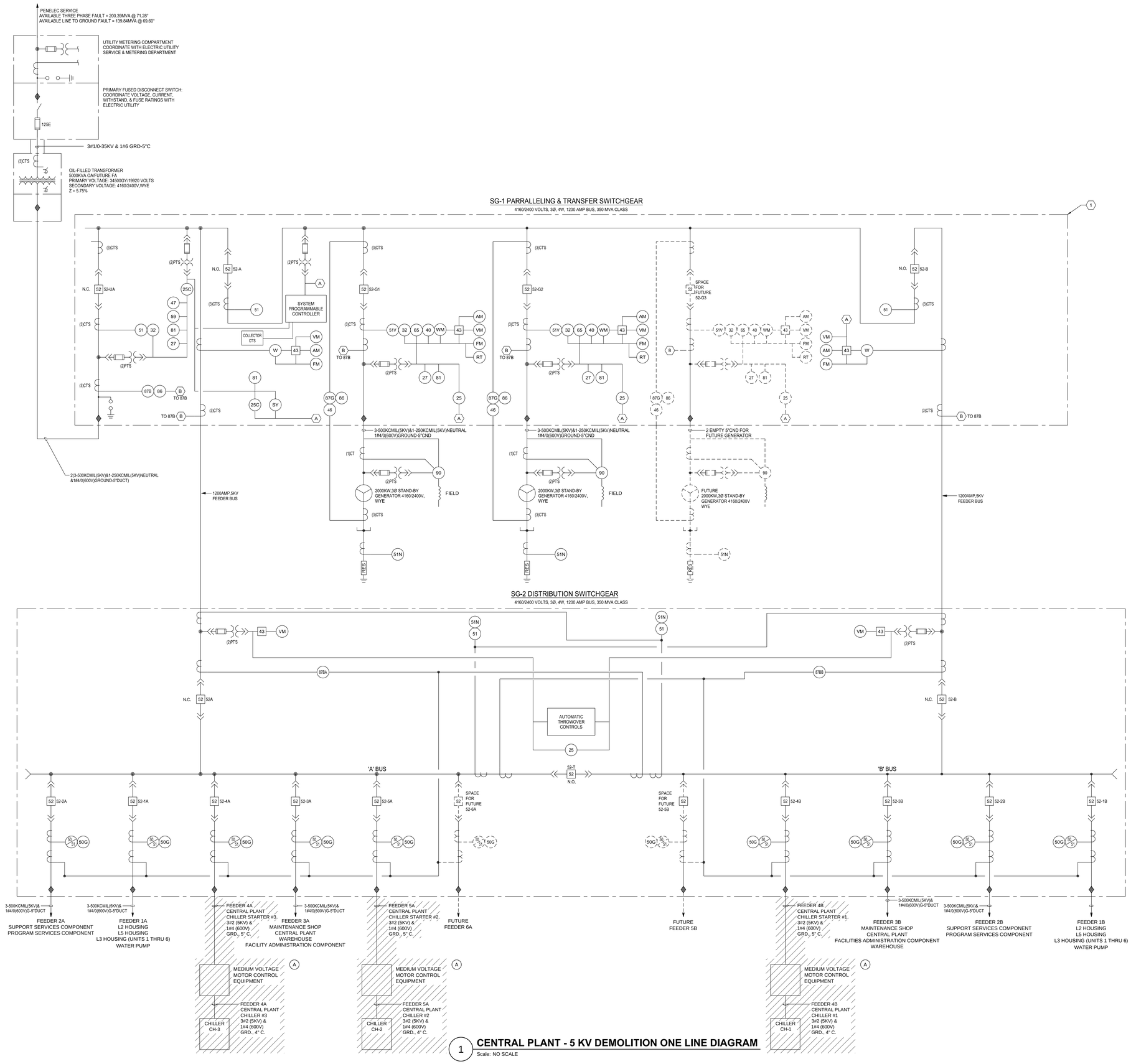

1 **CENTRAL PLANT - 5 KV DEMOLITION ONE LINE DIAGRAM**
Scale: NO SCALE

C	11/15/19 IGA PRICING	
B	11/7/19 IGA PRICING	
A	10/11/19 IGA PRICING	

RECORD REVISIONS

SEAL

SIGNATURE DATE

ENTECH ENGINEERING
1.800.825.1372
www.entecheng.com
ENTECH # 5787.001

COMMONWEALTH OF PENNSYLVANIA
DEPARTMENT OF GENERAL SERVICES
HARRISBURG, PENNSYLVANIA

D.G.S. PROJECT No.
GESA 2018-1

GESA PROJECT
SCI HOUTZDALE
HOUTZDALE, CLEARFIELD COUNTY, PA

CENTRAL PLANT 5KV DEMOLITION ONE LINE DIAGRAM

VERIFY SCALE
BAR IS ONE (1) INCH LONG ON ORIGINAL DRAWING:
0 1
IF BAR IS NOT ONE (1) INCH LONG, ADJUST SCALE ACCORDINGLY

CONTRACTOR SHALL FIELD VERIFY ALL DIMENSIONS. VARIANCE FROM CONTRACT DOCUMENTS NOT PERMITTED WITHOUT PROFESSIONAL & BUREAU OF CONSTRUCTION APPROVAL.

DRAWN BY	DATE	DRAWING No.
SCH	11/7/2019	ED-601
CHECKED BY DEM	SCALE AS NOTED	19 OF 25

FILE PATH: H:\0005787.001\04-CAD\SheetFiles\ED-601.dwg PLOTTED: 2019.11.15 05:04 PM PLOTTED BY: Michael Rissmiller
LAST SAVED: 2019.11.15 04:50 PM

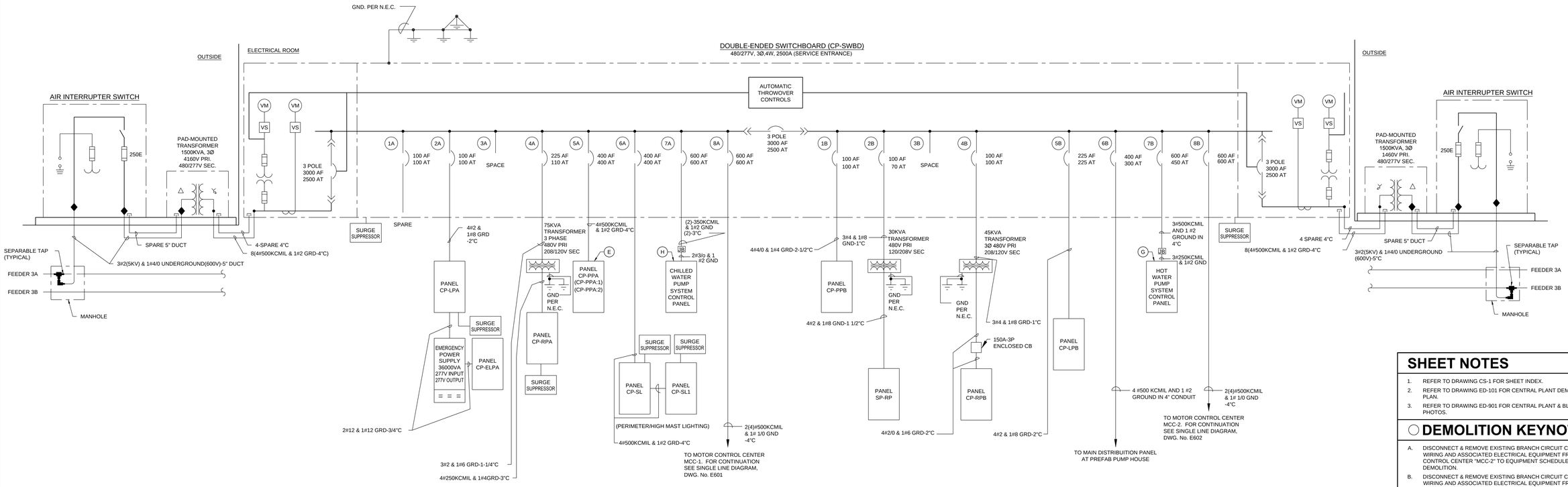

1 CENTRAL PLANT - 480V DEMOLITION ONE LINE DIAGRAM

Scale: NO SCALE

SHEET NOTES

1. REFER TO DRAWING CS-1 FOR SHEET INDEX.
2. REFER TO DRAWING ED-101 FOR CENTRAL PLANT DEMOLITION POWER PLAN.
3. REFER TO DRAWING ED-901 FOR CENTRAL PLANT & BLDG. #5 DEMO PHOTOS.

○ DEMOLITION KEYNOTES

A. DISCONNECT & REMOVE EXISTING BRANCH CIRCUIT CONDUIT & WIRING AND ASSOCIATED ELECTRICAL EQUIPMENT FROM MOTOR CONTROL CENTER "MCC-2" TO EQUIPMENT SCHEDULED FOR DEMOLITION.

B. DISCONNECT & REMOVE EXISTING BRANCH CIRCUIT CONDUIT & WIRING AND ASSOCIATED ELECTRICAL EQUIPMENT FROM MOTOR CONTROL CENTER "COM" TO EQUIPMENT SCHEDULED FOR DEMOLITION.

C. DISCONNECT & REMOVE EXISTING BRANCH CIRCUIT CONDUIT & WIRING AND ASSOCIATED ELECTRICAL EQUIPMENT FROM MOTOR CONTROL CENTER "MCC-1" TO EQUIPMENT SCHEDULED FOR DEMOLITION.

D. DISCONNECT & REMOVE EXISTING BRANCH CIRCUIT CONDUIT & WIRING AND ASSOCIATED ELECTRICAL EQUIPMENT FROM MOTOR CONTROL CENTER "COM" TO EQUIPMENT SCHEDULED FOR DEMOLITION. THIS DEMOLITION WORK SHALL NOT BE COMPLETED UNTIL THE END OF THE PROJECT.

E. DISCONNECT AND REMOVE EXISTING BRANCH CIRCUIT WIRING ROUTED FROM CIRCUIT BREAKERS "CP-PPA2-1" (3P,60A C/B), "CP-PPA2-7" (3P,60A C/B), "CP-PPA2-13" (3P,60A C/B) CURRENTLY SERVING EXTERIOR COOLING TOWERS CT-1, CT-2, & CT-3. EXISTING CIRCUIT BREAKERS AND ASSOCIATED CONDUIT SHALL REMAIN FOR RE-USE WITH NEW COOLING TOWER INSTALLATION.

F. EXISTING BOILER #4 SHALL REMAIN.

G. EXISTING HOT WATER PUMPS TO BE REMOVED UNDER MECHANICAL SCOPE OF WORK. DISCONNECT & REMOVE ELECTRICAL EQUIPMENT (INCLUDING STARTERS, WIREWAYS, DISCONNECT SWITCHES, ETC.) AND ASSOCIATED CONDUIT & WIRING FROM SWITCHBOARD "CP-SWBD" TO THE HOT WATER PUMPS. THIS DEMOLITION WORK SHALL BE COMPLETED AT THE END OF THE PROJECT.

H. EXISTING CHILLED WATER PUMPS TO BE REMOVED UNDER MECHANICAL SCOPE OF WORK. DISCONNECT & REMOVE ELECTRICAL EQUIPMENT (INCLUDING STARTERS, WIREWAYS, DISCONNECT SWITCHES, ETC.) AND ASSOCIATED WIRING FROM SWITCHBOARD "CP-SWBD" TO CHILLED WATER PUMPS. EXISTING CONDUIT ROUTED FROM SWITCHBOARD "CP-SWBD" TO EXISTING CHILLED WATER PUMP LOCATION SHALL REMAIN FOR REUSE WITH NEW CHILLED WATER PUMP INSTALLATION.

MOTOR CONTROL CENTER "MCC-2"
GENERAL ELECTRIC 8000 LINE CONTROL CENTER
(600A, 480V, 3Ø, 3W)

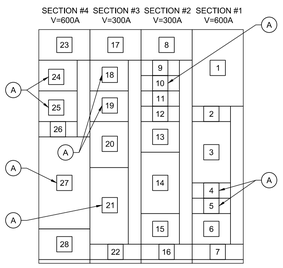

2 MOTOR CONTROL CENTER "MCC-2" FRONT ELEVATION

Scale: 1/2" = 1'-0"

MOTOR CONTROL CENTER "MCC-2" - CIRCUIT DESIGNATIONS

MCC SECTION #1

1. MAIN INCOMING LUGS.
2. SPACE.
3. MOTOR CONTROL CENTER "COM" FEEDER BREAKER.
4. BAGHOUSE MODULE #2 HEATER.
5. RECYCLE PUMP BFW PUMP #3, BFW PUMP #4 (FUT.).
6. AIR COMPRESSOR #2.
7. SPACE.

MCC SECTION #2

8. SPACE.
9. FUEL OIL PUMP #2.
10. COAL SCREW FEEDER #2.
11. SPARE.
12. SPACE.
13. SPACE.
14. SPACE.
15. ASH SILO BLOWER #2.
16. SPACE.

MCC SECTION #3

17. SPACE.
18. F.D. FAN #2.
19. LIME BLOWER #2.
20. SPARE F.D. FAN (FUTURE).
21. I.D. FAN #2.
22. SPACE.

MCC SECTION #4

23. SPACE.
24. LIMESTONE SCREW CONVEYOR #2.
25. MICRONIZER 2 OIL PUMP.
26. SPACE.
27. COAL MICRONIZER MILL.
28. SPACE.

MOTOR CONTROL CENTER "COM"
GENERAL ELECTRIC 8000 LINE CONTROL CENTER
(600A, 480V, 3Ø, 3W)

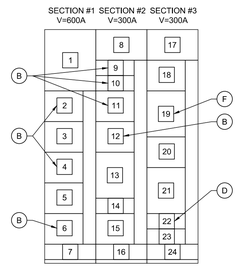

3 MOTOR CONTROL CENTER "COM" FRONT ELEVATION

Scale: 1/2" = 1'-0"

MOTOR CONTROL CENTER "COM" - CIRCUIT DESIGNATIONS

MCC SECTION #1

1. MAIN INCOMING LUGS.
2. LIME ROTARY VALVE NO. 2.
3. SPACE.
4. ASH SILO FLUIDIZER FAN.
5. SPARE.
6. ASH SILO ROTARY VALVE.
7. SPACE.

MCC SECTION #2

8. SPACE.
9. V.F.D. COAL BLOWER.
10. ASH SILO HEATERS.
11. LIME SILO ACTUATOR.
12. LIME ROTARY VALVE NO. 1.
13. UTILITY TRANSFORMER FEEDER.
14. TO PROCESS UPS.
15. SPACE.
16. SPACE.

MCC SECTION #3

17. SPACE.
18. NO. 3 AIR COMPRESSOR.
19. #4 BOILER.
20. SPACE.
21. SPACE.
22. BOILER #3
23. SPARE
24. SPACE

MOTOR CONTROL CENTER "MCC-1"
GENERAL ELECTRIC 8000 LINE CONTROL CENTER
(600A, 480V, 3Ø, 3W)

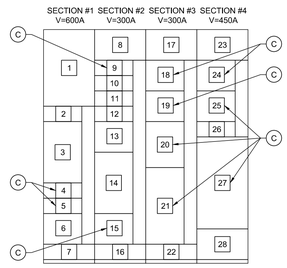

4 MOTOR CONTROL CENTER "MCC-1" FRONT ELEVATION

Scale: 1/2" = 1'-0"

MOTOR CONTROL CENTER "MCC-1" - CIRCUIT DESIGNATIONS

MCC SECTION #1

1. MAIN INCOMING LUGS.
2. SPACE.
3. MOTOR CONTROL CENTER "COM" FEEDER BREAKER.
4. BFW PUMPS #1 & #2
5. BAGHOUSE MODULE #1 HEATER
6. AIR COMPRESSOR #1
7. SPACE.

MCC SECTION #2

8. SPACE.
9. COAL SCREW FEEDER #1
10. FUEL OIL PUMP #1
11. 480V WELDING RECEPTACLES #1A & #1B
12. SPARE
13. SPACE.
14. SPACE.
15. ASH SILO BLOWER #1.
16. SPACE.

MCC SECTION #3

17. SPACE.
18. F.D. FAN #1.
19. LIME BLOWER #1.
20. STANDBY BLR. #4 F.D. FAN & AIR COMPRESSOR (FUTURE)
21. I.D. FAN #1.
22. SPACE.

MCC SECTION #4

23. SPACE.
24. LIMESTONE SCREW CONVEYOR #1.
25. MICRONIZER 1 OIL PUMP.
26. SPACE.
27. COAL MICRONIZER MILL.
28. SPACE.

B	11/15/19 IGA PRICING		
A	10/11/19 IGA PRICING		

RECORD REVISIONS

SEAL

SIGNATURE DATE

ENTECH ENGINEERING
1.800.825.1372
www.entecheng.com
ENTECH # 5787.001

COMMONWEALTH OF PENNSYLVANIA
DEPARTMENT OF GENERAL SERVICES
HARRISBURG, PENNSYLVANIA

D.G.S. PROJECT No. GESA 2018-1

GESA PROJECT
SCI HOUTZDALE
HOUTZDALE, CLEARFIELD COUNTY, PA

CENTRAL PLANT 480V DEMOLITION ONE LINE DIAGRAM

VERIFY SCALE

BAR IS ONE (1) INCH LONG ON ORIGINAL DRAWING:

0 1

IF BAR IS NOT ONE (1) INCH LONG, ADJUST SCALE ACCORDINGLY

CONTRACTOR SHALL FIELD VERIFY ALL DIMENSIONS. VARIANCE FROM CONTRACT DOCUMENTS NOT PERMITTED WITHOUT PROFESSIONAL & BUREAU OF CONSTRUCTION APPROVAL.

DRAWN BY	DATE	DRAWING No.
SCH	10/11/2019	ED-602
CHECKED BY DEM	SCALE AS NOTED	20 OF 25

FILE PATH: H:\0005787.001\04-CAD\SheetFiles\ED-602.dwg PLOTTED BY: Michael Rissmiller
LAST SAVED: 2019.11.15 04:50 PM PLOTTED: 2019.11.15 05:04 PM

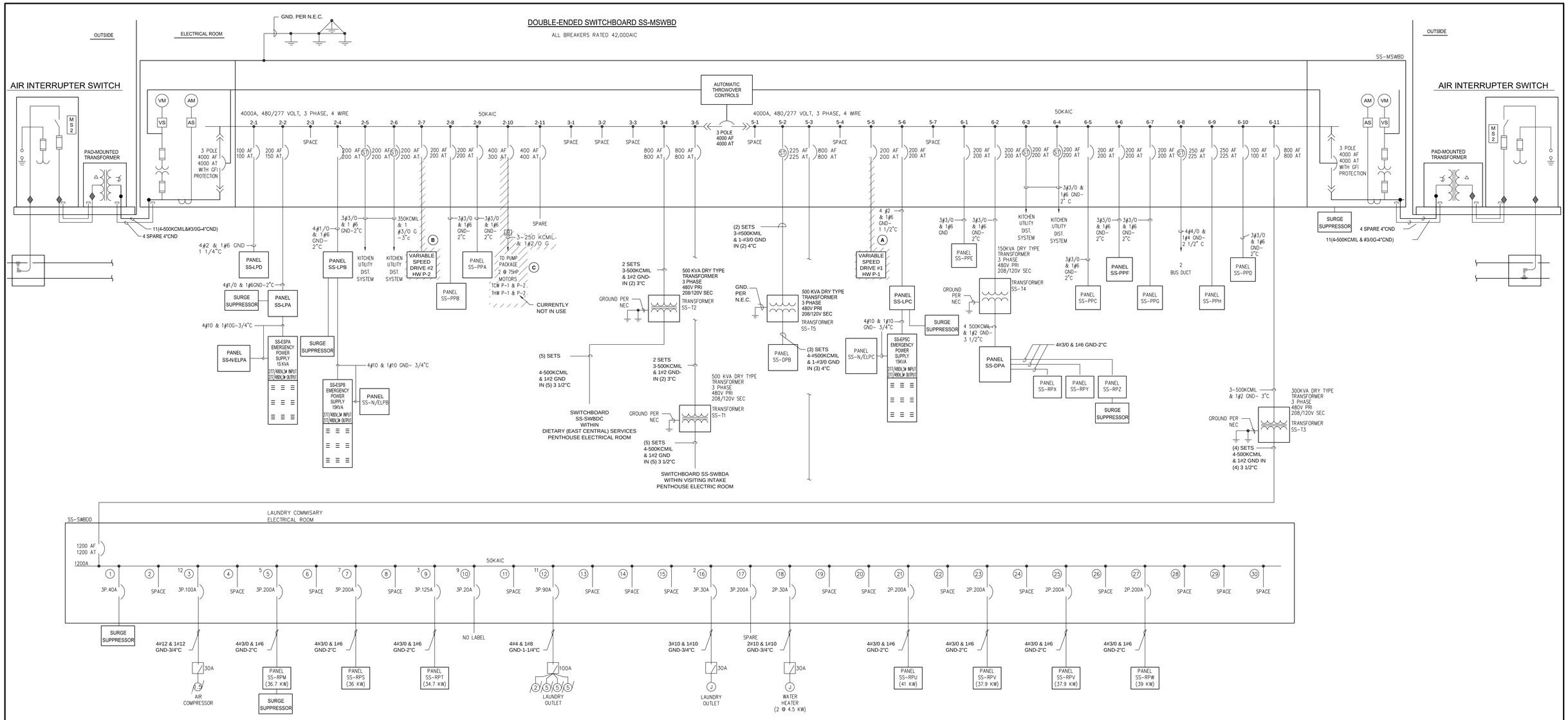

1 **BLDG. #5 - DEMOLITION ONE LINE DIAGRAM**

Scale: 1/8" = 1'0"

CONNECTED LOAD

PANEL	KW	DEMAND FACTOR	DEMAND LOAD
SS-LPA	72.7	1.0	72.7
SS-LPB	69.6	1.0	69.6
SS-LPC	51.5	1.0	51.5
SS-LPD	28.3	1.0	28.3
SS-SWBDA	340.0	1.0	340.0
SS-SWBDC	401.5	0.65	261.0
SS-SWBDD	303.7	1.0	303.7
SS-DPA	118.1	1.0	118.1
SS-SWBDB	358.3	0.65	232.9
SS-PPA	99.9	1.0	99.9
SS-PPB	118.0	1.0	118.0
SS-PPC	88.0	1.0	88.0
SS-PPD	77.1	1.0	77.1
SS-PPE	60.0	1.0	60.0
SS-PPF	60.0	1.0	60.0
SS-PPG	134.7	1.0	134.7
4 KITCHEN FEEDERS	400.0	0.65	260.0
(2) 75HP PUMP SYSTEM	159.0	1.0	159.0
(3) SHOP FEEDERS	300.0	0.65	195.0
TOTAL	=		2729.5 = 3289.0 AMPS

SHEET NOTES

1. REFER TO DRAWING CS-1 FOR SHEET INDEX.
2. REFER TO DRAWING ED-102 FOR BUILDING #5 DEMOLITION POWER PLAN.
3. REFER TO DRAWING ED-901 FOR CENTRAL PLANT & BLDG. #5 DEMO PHOTOS.

○ DEMOLITION KEYNOTES

A. DISCONNECT & REMOVE EXISTING VARIABLE FREQUENCY DRIVE AND FEEDER CONDUCTORS ROUTED FROM SWITCHBOARD SS-MSWBD TO HOT WATER PUMP HW P-1. EXISTING CONDUIT SHALL BE CUT FLUSH WITH FLOOR AND GROUTED SHUT (ABANDONED IN PLACE). EXISTING CIRCUIT BREAKER SHALL BE LABELED AS SPARE.

B. DISCONNECT & REMOVE EXISTING VARIABLE FREQUENCY DRIVE AND FEEDER CONDUCTORS ROUTED FROM SWITCHBOARD SS-MSWBD TO HOT WATER PUMP HW P-2. EXISTING CONDUIT SHALL BE CUT FLUSH WITH FLOOR AND GROUTED SHUT (ABANDONED IN PLACE). EXISTING CIRCUIT BREAKER SHALL BE LABELED AS SPARE.

C. DISCONNECT & REMOVE EXISTING VARIABLE FREQUENCY DRIVES AND FEEDER CONDUCTORS ROUTED FROM SWITCHBOARD SS-MSWBD TO CHILLED WATER PUMPS TCW P-1 & TCW P-2. EXISTING CONDUIT SHALL BE CUT FLUSH WITH FLOOR AND GROUTED SHUT (ABANDONED IN PLACE). EXISTING CIRCUIT BREAKER SHALL BE LABELED AS SPARE.

B	11/15/19 IGA PRICING	
A	10/11/19 IGA PRICING	

RECORD REVISIONS

SEAL

SIGNATURE DATE

ENTECH ENGINEERING 1.800.825.1372 www.entecheng.com ENTECH # 5787.001

COMMONWEALTH OF PENNSYLVANIA
DEPARTMENT OF GENERAL SERVICES
HARRISBURG, PENNSYLVANIA

D.G.S. PROJECT No. GESA 2018-1

GESA PROJECT
SCI HOUTZDALE
HOUTZDALE, CLEARFIELD COUNTY, PA

BLDG. #5 DEMOLITION ONE LINE DIAGRAM

DRAWN BY SCH | DATE 10/11/2019 | DRAWING No. ED-603
CHECKED BY DEM | SCALE AS NOTED | 21 OF 25

VERIFY SCALE

BAR IS ONE (1) INCH LONG ON ORIGINAL DRAWING: 0 — 1

IF BAR IS NOT ONE (1) INCH LONG, ADJUST SCALE ACCORDINGLY

CONTRACTOR SHALL FIELD VERIFY ALL DIMENSIONS. VARIANCE FROM CONTRACT DOCUMENTS NOT PERMITTED WITHOUT PROFESSIONAL & BUREAU OF CONSTRUCTION APPROVAL.

FILE PATH: H:\D005787.001\04-CAD\SheetFiles\ED-603.dwg PLOTTED BY: Michael Rissmiller
LAST SAVED: 2019.11.15 04:51 PM PLOTTED: 2019.11.15 05:04 PM

SHEET NOTES

1. REFER TO DRAWING CS-1 FOR SHEET INDEX.
2. REFER TO DRAWING ED-101 CENTRAL PLANT DEMOLITION POWER PLAN FOR EQUIPMENT LOCATIONS.
3. REFER TO DRAWING ED-102 BUILDING #5 GROUND FLOOR DEMOLITION POWER PLAN FOR EQUIPMENT LOCATIONS.

VARIABLE SPEED DRIVE UNIT #1 & #2 FOR HOT WATER PUMPS HW P-1 AND HWP-2

BUILDING #5
DEMO HW PUMP VFD'S
A Scale: NONE

CONDUIT ENTRY

BUILDING #5
DEMO HW PUMP CONDUIT & WIRING
B Scale: NONE

DISCONNECT SWITCH (TYPICAL FOR 6)
CONDUIT ENTRY (TYP.)

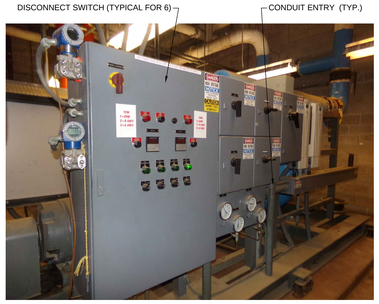

BUILDING #5
DEMO HW PUMP VFD'S
C Scale: NONE

CHILLED WATER PUMP CHW P-1 VARIABLE FREQUENCY DRIVE
CHILLED WATER PUMP CHW P-2 VARIABLE FREQUENCY DRIVE

BUILDING #5
DEMO CHW PUMP VFD'S
D Scale: NONE

SWITCHBOARD SS-MSWBD

BUILDING #5
SWITCHBOARD SS-MSWBD
E Scale: NONE

SWITCHBOARD SS-MSWBD SECTION 2-7 HW P-2 C/B

BUILDING #5
SWITCHBOARD SS-MSWBD
SECTION 2-7 HW P-2 CIRCUIT BREAKER
F Scale: NONE

SWITCHBOARD SS-MSWBD SECTION 5-5 HW P-1 C/B

BUILDING #5
SWITCHBOARD SS-MSWBD
SECTION 5-5 HW P-1 CIRCUIT BREAKER
G Scale: NONE

SWITCHBOARD SS-MSWBD SECTION 2-10 TCW P-1 & P-2 C/B

BUILDING #5
SWITCHBOARD SS-MSWBD
SECTION 2-10 TCW P-1 & P-2 CIRCUIT BREAKER
H Scale: NONE

MOTOR CONTROL CENTER MCC-1

CENTRAL PLANT
MOTOR CONTROL CENTER MCC-1
J Scale: NONE

MOTOR CONTROL CENTER MCC-2

CENTRAL PLANT
MOTOR CONTROL CENTER MCC-2
K Scale: NONE

MOTOR CONTROL CENTER MCC-COM

CENTRAL PLANT
MOTOR CONTROL CENTER MCC-COM
L Scale: NONE

CHILLER #1 MEDIUM VOLTAGE MOTOR CONTROL
CHILLER #2 MEDIUM VOLTAGE MOTOR CONTROL
CHILLER #3 MEDIUM VOLTAGE MOTOR CONTROL

CENTRAL PLANT
CHILLER MEDIUM VOLTAGE MOTOR CONTROL
M Scale: NONE

CHILLER #3
CHILLER #2
CHILLER #1

CENTRAL PLANT
CHILLER NO. 1, NO. 2, & NO. 3
N Scale: NONE

COOLING TOWER CT-3 FULL VOLTAGE MAGNETIC STARTER
COOLING TOWER CT-2 FULL VOLTAGE MAGNETIC STARTER
COOLING TOWER CT-1 FULL VOLTAGE MAGNETIC STARTER

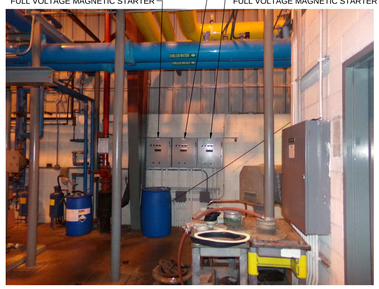

CENTRAL PLANT
COOLING TOWER STARTERS
O Scale: NONE

CHILLED WATER PUMP ELECTRICAL DISCONNECT SWITCHES, STARTERS, VFD'S. ETC.

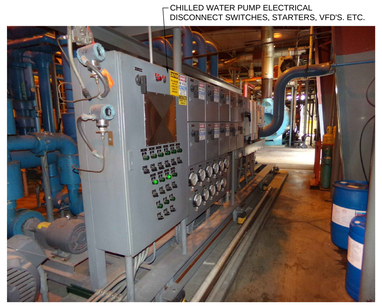

CENTRAL PLANT
CHILLED WATER PUMPS
P Scale: NONE

BOILER #4

CENTRAL PLANT
BOILER #4
Q Scale: NONE

BOILER #3

CENTRAL PLANT
BOILER #3
R Scale: NONE

5KV PARALLELING & TRANSFER SWITCHGEAR

CENTRAL PLANT
5KV SWITCHGEAR
S Scale: NONE

SWITCHBOARD CP-SWBD

CENTRAL PLANT
SWITCHBOARD CP-SWBD
T Scale: NONE

PANELS CP-PPA:1 & CP-PPA:2

CENTRAL PLANT
ELEC. RM. PANELS
U Scale: NONE

CENTRAL PLANT
COOLING TOWERS
V Scale: NONE

B	11/15/19 IGA PRICING	
A	10/11/19 IGA PRICING	

RECORD REVISIONS

SEAL

SIGNATURE DATE

ENTECH ENGINEERING
1.800.825.1372
www.entecheng.com
ENTECH # 5787.001

COMMONWEALTH OF PENNSYLVANIA
DEPARTMENT OF GENERAL SERVICES
HARRISBURG, PENNSYLVANIA

D.G.S. PROJECT No. GESA 2018-1

GESA PROJECT
SCI HOUTZDALE
HOUTZDALE, CLEARFIELD COUNTY, PA

CENTRAL PLANT & BLDG. #5 DEMO PHOTOS

VERIFY SCALE
BAR IS ONE (1) INCH LONG ON ORIGINAL DRAWING:
0 1
IF BAR IS NOT ONE (1) INCH LONG, ADJUST SCALE ACCORDINGLY

CONTRACTOR SHALL FIELD VERIFY ALL DIMENSIONS. VARIANCE FROM CONTRACT DOCUMENTS NOT PERMITTED WITHOUT PROFESSIONAL & BUREAU OF CONSTRUCTION APPROVAL.

DRAWN BY	DATE	DRAWING No.
SCH	10/11/2019	ED-901
CHECKED BY DEM	SCALE AS NOTED	22 OF 25

FILE PATH: H:\0005787.001\04-CAD\SheetFiles\ED-901.dwg PLOTTED BY: Michael Rissmiller
LAST SAVED: 2019.11.15 04:51 PM PLOTTED: 2019.11.15 05:04 PM

SHEET NOTES

1. REFER TO DRAWING E-601 FOR CENTRAL PLANT 5KV ONE LINE DIAGRAM.
2. REFER TO DRAWING E-602 FOR CENTRAL PLANT 480V ONE LINE DIAGRAM.
3. REFER TO DRAWING E-603 FOR DLDG. #5 ONE LINE DIAGRAM.

SHEET KEYNOTES

1. EXISTING BOILER #4 TO BE CONVERTED FROM A STEAM BOILER TO A HOT WATER BOILER. EXISTING ELECTRICAL ELECTRICAL FEEDER AND ASSOCIATED CONDUIT & WIRING SHALL REMAIN.
2. CONNECT CHILLED WATER PUMP CHWP-4 TO CIRCUIT INDICATED. PROVIDE 3P.30A NON-FUSED DISCONNECT SWITCH TYPE NEMA 12. PROVIDE UNISTRUT SUPPORT FOR MOUNTING DISCONNECT SWITCH. REFER TO DRAWING E-602 CENTRAL PLANT 480V ONE LINE DIAGRAM FOR CONDUIT & WIRE SIZES AND ADDITIONAL REQUIREMENTS.
3. CONNECT COOLING TOWER TO CIRCUIT INDICATED. PROVIDE 3P.60A NON-FUSED DISCONNECT SWITCH TYPE NEMA 4X AT THE COOLING TOWER. DISCONNECT SWITCH SHALL BE MOUNTED TO COOLING TOWER SUPPORT STEEL. CONNECT COOLING TOWER TO PANEL "CP-PPA:2" (VIA NEW VARIABLE FREQUENCY DRIVE LOCATED WITHIN THE CENTRAL PLANT) WITH 3#8 & 1#10 GRD., IN EXISTING 1" CONDUIT. UTILIZE EXISTING CONDUIT ROUTED WITHIN FLOOR BACK TO PANEL "CP-PPA:2" AND EXTERIOR UNDERGROUND CONDUIT FOR ROUTING NEW BRANCH CIRCUIT WIRING. EXTEND & RECONFIGURE EXISTING CONDUIT AS REQUIRED TO ACCOMMODATE NEW INSTALLATION. UTILIZE 3P.60A CIRCUIT BREAKER WITHIN PANEL "CP-PPA:2" TO SERVE NEW COOLING TOWER (CIRCUIT BREAKER CURRENTLY SERVES COOLING TOWER SCHEDULED FOR DEMOLITION).
4. CONNECT TO CIRCUIT INDICATED. REFER TO DRAWING E-602 CENTRAL PLANT 480V ONE LINE DIAGRAM FOR CONDUIT & WIRE SIZE.
5. CONNECT REFRIGERANT MONITOR AND ALARM PANEL TO PANEL "UT1" WITH 2#12 & 1#12 GRD., 3/4" CONDUIT. UTILIZE SPARE 1P.20A CIRCUIT BREAKER WITHIN PANEL. PROVIDE SUPPORT FOR ROUTING BRANCH CIRCUIT WIRING OVERHEAD TO REFRIG. MONITOR & ALARM PANEL.
6. CONNECT EMERGENCY EXHAUST FAN TO MOTOR CONTROL CENTER "MCC-2" SECTION #4 WITH 3#12 & 1#12 GRD., 3/4" CONDUIT. REFER TO DRAWING E-602 FOR MOTOR CONTROL CENTER "MCC-2" AND ADDITIONAL ELECTRICAL REQUIREMENTS. EXHAUST FAN "EF-1" SHALL BE INTERLOCKED WITH REFRIGERANT MONITOR AND ALARM PANEL. PROVIDE ADEQUATE SUPPORT FOR MOUNTING DISCONNECT SWITCH & ROUTING BRANCH CIRCUIT WIRING OVERHEAD TO EXHAUST FAN "EF-2". PROVIDE ALL INTERCONNECTING WIRING AND DEVICES TO INTERLOCK EF-1 AND REFRIGERANT MONITOR AND ALARM PANEL.
7. PROVIDE TWO DEDICATED 120 VOLT DUPLEX RECEPTACLES TO SERVE THE WATER SOFTENER. CONNECT BOTH RECEPTACLES TO PANEL "UT1" EACH WITH 2#12 & 1#12 GRD., 3/4" CONDUIT. UTILIZE TWO 1P.20A CIRCUIT BREAKERS WITHIN PANEL TO SERVE THE RECEPTACLES.
8. CONNECT STEAM BOILER "SB-1" TO "MCC-2" SECTION #4 WITH 3#10 & 1#10 GRD., 3/4" CONDUIT. REFER TO DRAWING E-602 FOR MOTOR CONTROL CENTER "MCC-2" AND ADDITIONAL ELECTRICAL REQUIREMENTS. PROVIDE ADEQUATE SUPPORT FOR ROUTING BRANCH CIRCUIT WIRING OVERHEAD TO STEAM BOILER "SB-1".
9. CONNECT STEAM BOILER "SB-2" TO MOTOR CONTROL CENTER "MCC-2" SECTION #1 WITH 3#10 & 1#10 GRD., 3/4" CONDUIT. REFER TO DRAWING E-602 FOR MOTOR CONTROL CENTER "MCC-2" AND ADDITIONAL ELECTRICAL REQUIREMENTS. PROVIDE ADEQUATE SUPPORT FOR ROUTING BRANCH CIRCUIT WIRING OVERHEAD TO STEAM BOILER "SB-2" (STEAM BOILER "SB-2" WILL NOT BE REQUIRED PENDING THE RESULTS OF BOILER #3 TUBE INSPECTION).
10. CONNECT CHILLER TO 300KVA TRANSFORMER WITHIN MAIN ELECTRICAL ROOM. CHILLER SHALL BE PROVIDED WITH VFD AND DISCONNECT SWITCH. REFER TO DRAWING E-602 CENTRAL PLANT 5KV ONE LINE DIAGRAM FOR CONDUIT & WIRE SIZE REQUIREMENTS. UTILIZE EXISTING CONDUIT WITHIN FLOOR FOR NEW 480V CHILLER FEEDER ROUTED FROM 300 KVA TRANSFORMER. REFER TO SHEET KEYNOTE #11.
11. PROVIDE 300 KVA DRY-TYPE TRANSFORMER & 3P.400A DISCONNECT SWITCH TO SERVE THE NEW CHILLER AND CONNECT TO SWITCHGEAR SG-2 LOCATED IN THIS ROOM. REFER TO DRAWING DRAWING E-602 CENTRAL PLANT 5KV ONE LINE DIAGRAM FOR CONDUIT & WIRE SIZE REQUIREMENTS. PROVIDE CONCRETE PAD AS INDICATED.
12. CONNECT HOT WATER BOILER "HWB-1" TO MOTOR CONTROL CENTER "MCC-1" SECTION #1 WITH 3#10 & 1#10 GRD., 3/4" CONDUIT. REFER TO DRAWING E-602 FOR MOTOR CONTROL CENTER "MCC-1" AND ADDITIONAL ELECTRICAL REQUIREMENTS. PROVIDE ADEQUATE SUPPORT FOR ROUTING BRANCH CIRCUIT WIRING OVERHEAD TO HOT WATER BOILER "HWB-1".
13. CONNECT HOT WATER BOILER "HWB-2" TO MOTOR CONTROL CENTER "MCC-1" SECTION #1 WITH 3#10 & 1#10 GRD., 3/4" CONDUIT. REFER TO DRAWING E-602 FOR MOTOR CONTROL CENTER "MCC-1" AND ADDITIONAL ELECTRICAL REQUIREMENTS. PROVIDE ADEQUATE SUPPORT FOR ROUTING BRANCH CIRCUIT WIRING OVERHEAD TO HOT WATER BOILER "HWB-2".
14. CONNECT DEAERATOR "DE-1" TO MOTOR CONTROL CENTER "MCC-2" SECTION #2 WITH 3#10 & 1#10 GRD., 3/4" CONDUIT. PROVIDE 3P.30A NON-FUSED DISCONNECT SWITCH TYPE NEMA 12. REFER TO DRAWING E-602 FOR MOTOR CONTROL CENTER "MCC-2" AND ADDITIONAL ELECTRICAL REQUIREMENTS. PROVIDE ADEQUATE SUPPORT FOR ROUTING BRANCH CIRCUIT WIRING OVERHEAD TO DEAERATOR "DE-1".
15. EXISTING METAL CLAD SWITCHGEAR BREAKER SHALL BE RE-USED TO SERVE THE NEW CHILLER. REFER TO DRAWING E-601 FOR ADDITIONAL ELECTRICAL REQUIREMENTS.
16. PROVIDE NEW PANEL "CHWP" TO SERVE CHILLED WATER & CONDENSER WATER PUMPS. REFER TO DRAWING E-602 FOR CONDUIT & WIRE SIZE REQUIREMENTS.
17. CONNECT HOT WATER PUMP TO MOTOR CONTROL CENTER "MCC-1" WITH 3#1 & 1#8 GRD., 1-1/4" CONDUIT. REFER TO DRAWING E-602 FOR MOTOR CONTROL CENTER "MCC-1" AND ADDITIONAL ELECTRICAL REQUIREMENTS. PROVIDE ADEQUATE SUPPORT FOR ROUTING BRANCH CIRCUIT WIRING OVERHEAD TO HOT WATER PUMP.
18. CONNECT AIR COMPRESSOR TO MOTOR CONTROL CENTER "COM" WITH 3#10 & 1#10 GRD., 3/4" CONDUIT. PROVIDE 3P.30A NON-FUSED DISCONNECT SWITCH TYPE NEMA 12. REFER TO DRAWING E-602 FOR MOTOR CONTROL CENTER "COM" AND ADDITIONAL ELECTRICAL REQUIREMENTS. PROVIDE ADEQUATE SUPPORT FOR DISC. SWITCH & ROUTING BRANCH CIRCUIT WIRING OVERHEAD TO AIR COMPRESSOR.
19. FUEL UNLOADING STATION ELECTRICAL PANEL PROVIDED WITH FUEL UNLOADING STATION. PROVIDE PANEL "PP" (RATED: 100A, 120/208V, 3Ø, 4W, WITH 3P.100A MAIN CIRCUIT BREAKER, 30 CIRCUIT) TO SERVE THE FUEL UNLOADING STATION PANEL. PROVIDE 4#3/0 & 1#4 GRD., IN A 2" CONDUIT (W/ONE 2" C. SPARE) ROUTED FROM PANEL "PP" TO THE FUEL UNLOADING STATION PANEL. PROVIDE 3P.60A CIRCUIT BREAKER WITHIN PANEL "PP" TO SERVE THE FUEL UNLOADING STATION PANEL.

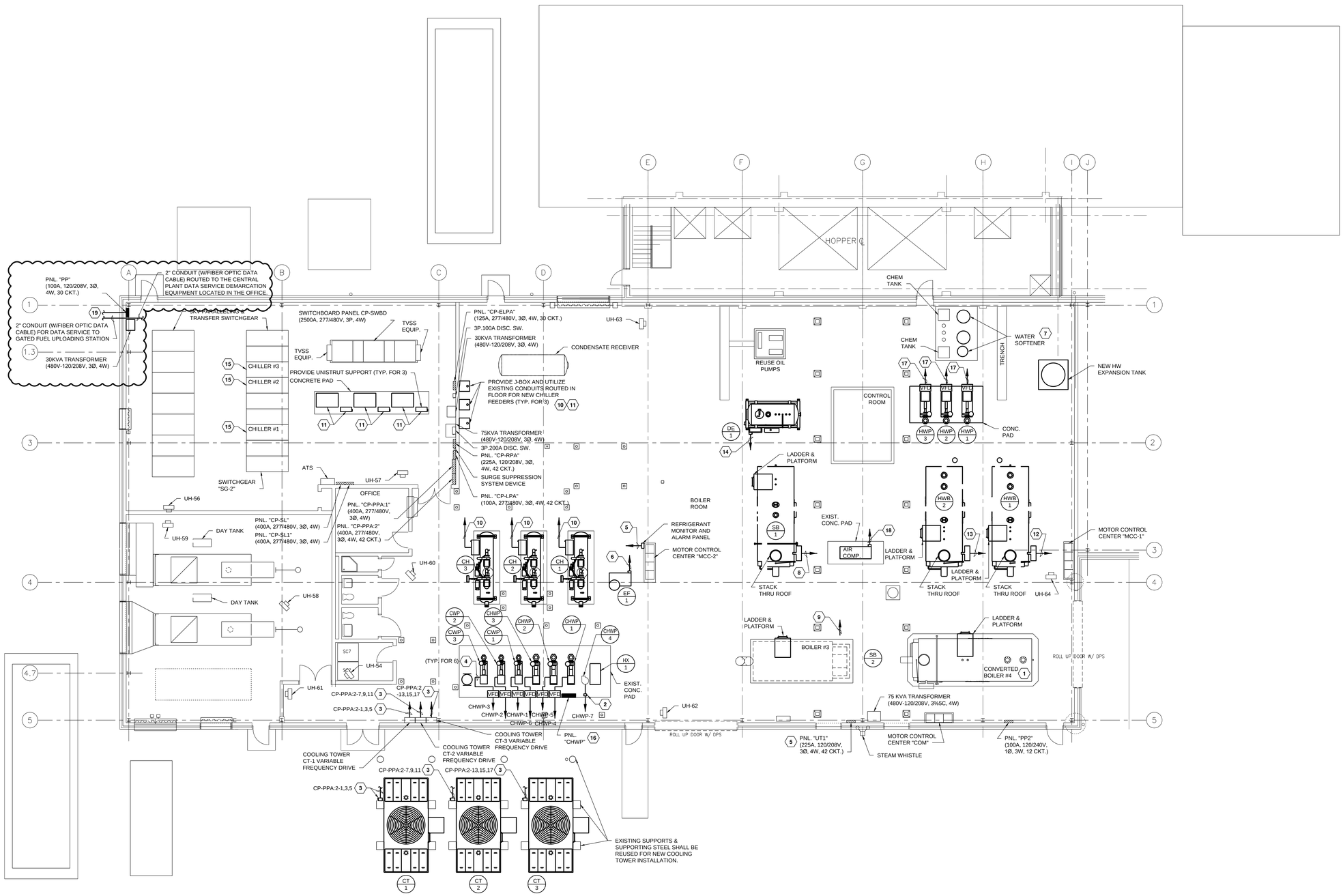

1 **CENTRAL PLANT DEMOLITION POWER PLAN**

Scale: 1/8" = 1'0"

0 4' 8' 16'

C	11/15/19 IGA PRICING	
B	11/7/19 IGA PRICING	
A	11/1/19 IGA PRICING	

RECORD REVISIONS

SEAL

SIGNATURE DATE

ENTECH ENGINEERING
1.800.825.1372
www.entecheng.com
ENTECH # 5787.001

COMMONWEALTH OF PENNSYLVANIA
DEPARTMENT OF GENERAL SERVICES
HARRISBURG, PENNSYLVANIA

D.G.S. PROJECT No.
GESA 2018-1

GESA PROJECT
SCI HOUTZDALE
HOUTZDALE, CLEARFIELD COUNTY, PA

CENTRAL PLANT POWER PLAN

VERIFY SCALE

BAR IS ONE (1) INCH LONG ON ORIGINAL DRAWING:

0 1

IF BAR IS NOT ONE (1) INCH LONG, ADJUST SCALE ACCORDINGLY

CONTRACTOR SHALL FIELD VERIFY ALL DIMENSIONS. VARIANCE FROM CONTRACT DOCUMENTS NOT PERMITTED WITHOUT PROFESSIONAL & BUREAU OF CONSTRUCTION APPROVAL.

DRAWN BY	DATE	DRAWING No.
SCH	11/1/2019	E-101
CHECKED BY DEM	SCALE AS NOTED	23 OF 25

FILE PATH: H:\0005787.001\04-CAD\SheetFiles\ED-101-E-101.dwg
LAST SAVED: 2019 11 15 05:08 PM PLOTTED: 2019 11 15 05:09 PM PLOTTED BY: Michael Rissmiller

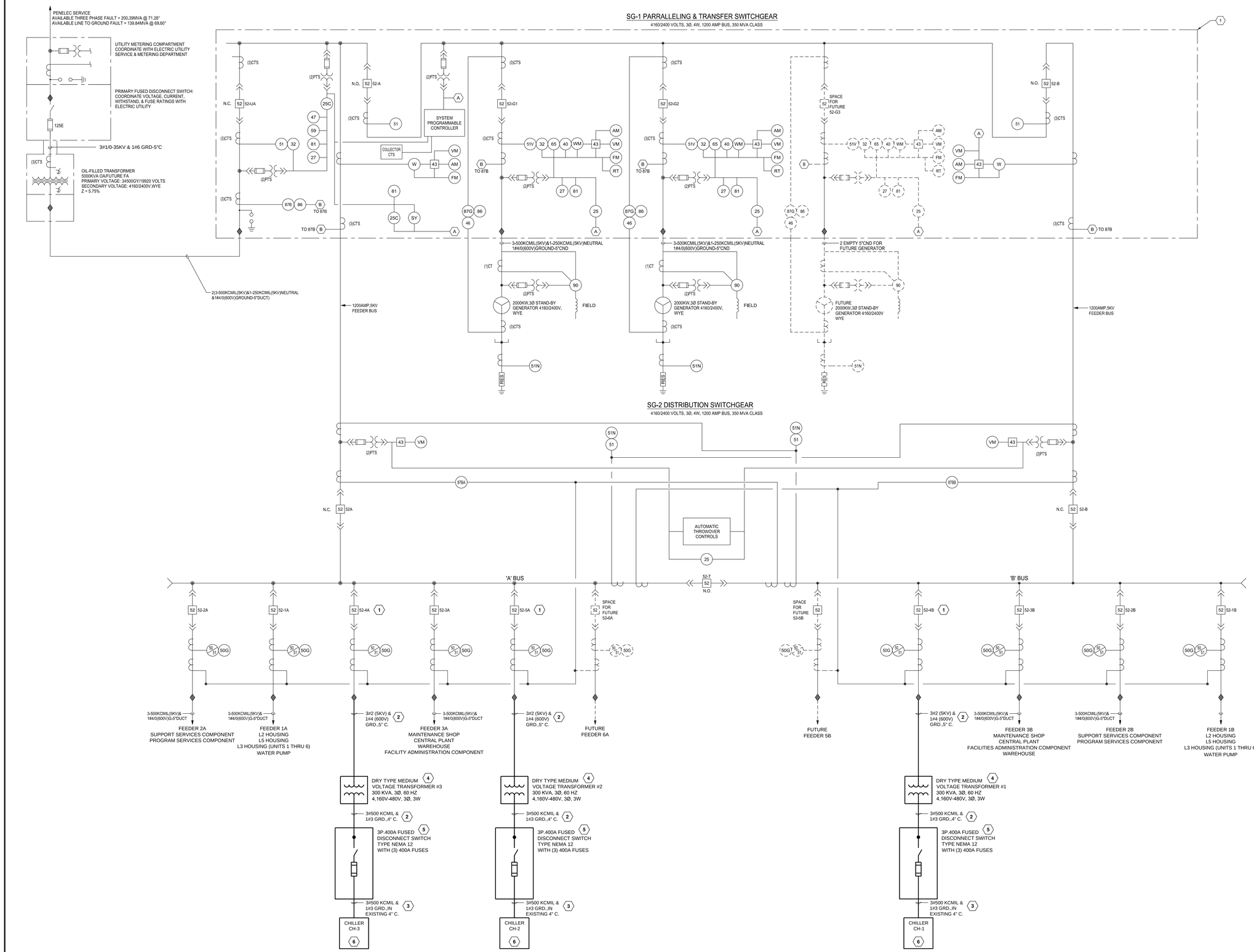

1 **CENTRAL PLANT - 5 KV ONE LINE DIAGRAM**

Scale: NO SCALE

0 4' 8' 16'

SHEET NOTES

1. REFER TO DRAWING CS-1 FOR SHEET INDEX.
2. REFER TO DRAWING E-101 FOR ELECTRICAL EQUIPMENT LOCATIONS.

SHEET KEYNOTES

1. EXISTING BREAKER AND ASSOCIATED RELAYS SHALL REMAIN TO ACCOMMODATE NEW CHILLER INSTALLATION. OVERCURRENT SHALL BE SET AT 60A TO SERVE THE NEW CHILLER TRANSFORMER.
2. PROVIDE NEW FEEDER CONDUIT & WIRING AS INDICATED.
3. PROVIDE NEW FEEDER WIRING WITHIN EXISTING CONDUIT ROUTED WITHIN FLOOR.
4. PROVIDE NEW INTERIOR FLOOR MOUNTED MEDIUM VOLTAGE DRY TYPE TRANSFORMER TO SERVE CHILLER AS INDICATED. REFER TO DRAWING E-101 CENTRAL PLANT POWER PLAN FOR LOCATION.
5. PROVIDE NEW FUSED DISCONNECT SWITCH AS INDICATED. DISCONNECT SWITCH SHALL BE PROVIDED WITH UNI-STRUT SUPPORT FOR MOUNTING ADJACENT TO THE TRANSFORMER. REFER TO DRAWING E-101 CENTRAL PLANT POWER PLAN FOR LOCATION.
6. NEW CHILLER TO BE PROVIDED BY OTHERS. REFER TO DRAWING E-101 CENTRAL PLANT POWER PLAN FOR LOCATION.

C	11/15/19	IGA PRICING
A	11/7/19	IGA PRICING
A	11/1/19	IGA PRICING

RECORD REVISIONS

SEAL

SIGNATURE DATE

ENTECH ENGINEERING
1.800.825.1372
www.entecheng.com
ENTECH # 5787.001

COMMONWEALTH OF PENNSYLVANIA
DEPARTMENT OF GENERAL SERVICES
HARRISBURG, PENNSYLVANIA

D.G.S. PROJECT No.
GESA 2018-1

GESA PROJECT
SCI HOUTZDALE
HOUTZDALE, CLEARFIELD COUNTY, PA

CENTRAL PLANT 5KV ONE LINE DIAGRAM

VERIFY SCALE

BAR IS ONE (1) INCH LONG ON ORIGINAL DRAWING:
0 1
IF BAR IS NOT ONE (1) INCH LONG, ADJUST SCALE ACCORDINGLY

CONTRACTOR SHALL FIELD VERIFY ALL DIMENSIONS. VARIANCE FROM CONTRACT DOCUMENTS NOT PERMITTED WITHOUT PROFESSIONAL & BUREAU OF CONSTRUCTION APPROVAL.

DRAWN BY	DATE	DRAWING No.
SCH	11/1/2019	E-601
CHECKED BY	SCALE	
DEM	AS NOTED	24 OF 25

FILE PATH: H:\0005787.001\04-CAD\SheetFiles\E-601.dwg PLOTTED: 2019.11.15 04:57 PM
LAST SAVED: 2019.11.15 05:05 PM PLOTTED BY: Michael Rissmiller

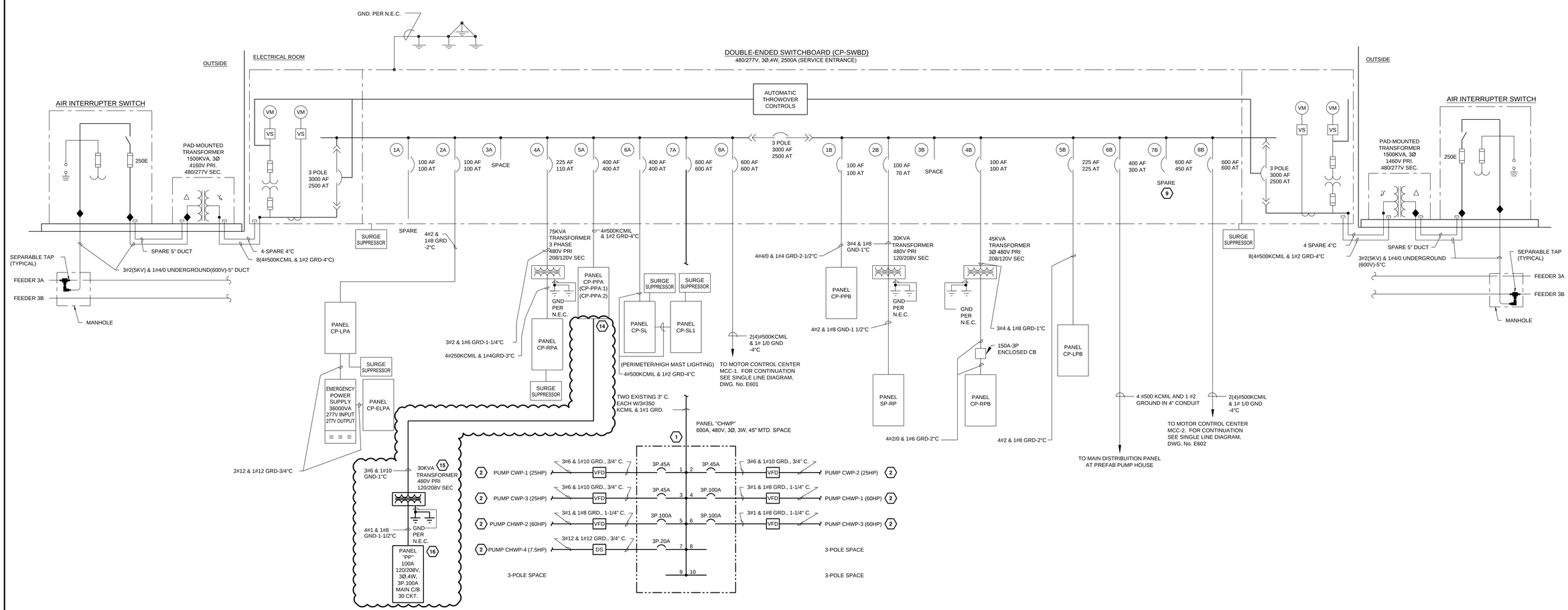

1 **CENTRAL PLANT - 480V ONE LINE DIAGRAM**
Scale: NO SCALE

SHEET NOTES

1. REFER TO DRAWING CS-1 FOR SHEET INDEX.
2. REFER TO DRAWING E-101 FOR ELECTRICAL EQUIPMENT LOCATIONS.

SHEET KEYNOTES

1. PROVIDE PANEL "CHWP" FOR NEW CHILLED WATER & CONDENSER WATER PUMPS SERVED FROM SWITCHBOARD "CP-SWBD". PROVIDE NEW FEEDER WIRING AS INDICATED WITHIN TWO EXISTING 3" CONDUITS. EXTEND EXISTING CONDUITS ROUTED THROUGH FLOOR TO NEW PANEL LOCATION. PROVIDE UNISTRUT SUPPORT FOR MOUNTING PANEL ABOVE CONDUITS ROUTED UP FROM WITHIN FLOOR ADJACENT TO PUMPS.
2. PROVIDE NEW BRANCH CIRCUIT CONDUIT & WIRING AS INDICATED.
3. CONNECT EMERGENCY EXHAUST FAN "EF-1" TO MCC-2 WITH 2#12 & 1#12 GRD., 3/4" CONDUIT. PROVIDE NEW 3P.15A CIRCUIT BREAKER AND SIZE 0 STARTER WITHIN MCC BUCKET. UTILIZE EXISTING INDICATOR LIGHTS AND HAND-OFF-AUTO SWITCH FOR NEW EXHAUST FAN. DISCONNECT & REMOVE EXISTING CIRCUIT BREAKER AND STARTER CURRENTLY SERVING MICRONIZER 2 OIL PUMP SCHEDULED FOR DEMOLITION.
4. CONNECT STEAM BOILER "SB-1" TO MOTOR CONTROL CENTER "MCC-2" WITH 3#10 & 1#10 GRD., 3/4" CONDUIT. PROVIDE 3P.30A CIRCUIT BREAKER WITHIN MCC BUCKET.
5. CONNECT STEAM BOILER "SB-2" TO MOTOR CONTROL CENTER "MCC-2" WITH 3#10 & 1#10 GRD., 3/4" CONDUIT. PROVIDE 3P.30A CIRCUIT BREAKER WITHIN MCC BUCKET.
6. CONNECT HOT WATER BOILER "HWB-1" TO MOTOR CONTROL CENTER "MCC-1" WITH 3#10 & 1#10 GRD., 3/4" CONDUIT. PROVIDE 3P.30A CIRCUIT BREAKER WITHIN MCC BUCKET.
7. CONNECT HOT WATER BOILER "HWB-2" TO MOTOR CONTROL CENTER "MCC-1" WITH 3#10 & 1#10 GRD., 3/4" CONDUIT. PROVIDE 3P.30A CIRCUIT BREAKER WITHIN MCC BUCKET.
8. CONNECT DEAERATOR "DE-1" TO MOTOR CONTROL CENTER "MCC-1" WITH 3#10 & 1#10 GRD., 3/4" CONDUIT. PROVIDE 3P.30A CIRCUIT BREAKER WITHIN MCC BUCKET.
9. EXISTING CIRCUIT BREAKER CURRENTLY SERVING EXISTING HOT WATER PUMPS SCHEDULED FOR DEMOLITION SHALL BE LABLED AS SPARE. HOT WATER PUMPS SHALL BE REMOVED AT THE END OF THE PROJECT.
10. CONNECT HOT WATER PUMP "HWP-1" TO MOTOR CONTROL CENTER "MCC-1" WITH 3#1 & 1#8 GRD., 1-1/4" CONDUIT. PROVIDE 3P.100A CIRCUIT BREAKER WITHIN MCC BUCKET.
11. CONNECT HOT WATER PUMP "HWP-2" TO MOTOR CONTROL CENTER "MCC-1" WITH 3#1 & 1#8 GRD., 1-1/4" CONDUIT. PROVIDE NEW BUCKET WITHIN EXISTING SPACE CONTAINING A 3P.100A CIRCUIT BREAKER TO SERVE "HWP-2".
12. CONNECT HOT WATER PUMP "HWP-3" TO MOTOR CONTROL CENTER "MCC-1" WITH 3#1 & 1#8 GRD., 1-1/4" CONDUIT. PROVIDE NEW BUCKET TO REPLACE EXISTING BUCKET CONTAINING A 3P.100A CIRCUIT BREAKER TO SERVE "HWP-3".
13. CONNECT AIR COMPRESSOR TO MOTOR CONTROL CENTER "COM" WITH 3#10 & 1#10 GRD., 3/4" CONDUIT. PROVIDE NEW BUCKET TO REPLACE EXISTING BUCKET CONTAINING A 3P.25A CIRCUIT BREAKER TO SERVE AIR COMPRESSOR.
14. PROVIDE 3P.45A CIRCUIT BREAKER WITHIN PANEL "CP-PPA:2" TO SERVE 30 KVA TRANSFORMER AND PANEL "PP". CONNECT WITH CONDUIT & WIRE SIZE AS INDICATED.
15. PROVIDE 30 KVA TRANSFORMER (RATED: 480V-120/208V, 3-PHASE) TO SERVE PANEL "PP". PROVIDE NEW FEEDER CONDUIT & WIRING AS INDICATED. TRANSFORMER SHALL BE FLOOR MOUNTED WITH CONCRETE PAD.
16. PROVIDE PANEL "PP" TO SERVE NEW FUEL UNLOADING STATION. PROVIDE NEW FEEDER CONDUIT & WIRING AS INDICATED. PROVIDE UNISTRUT SUPPORT FOR MOUNTING PANEL.

MOTOR CONTROL CENTER "MCC-2"
GENERAL ELECTRIC 8000 LINE CONTROL CENTER
(600A, 480V, 3Ø, 3W)

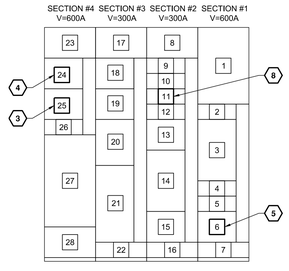

2 **MOTOR CONTROL CENTER "MCC-2" FRONT ELEVATION**
Scale: 1/2" = 1'-0"

MOTOR CONTROL CENTER "COM"
GENERAL ELECTRIC 8000 LINE CONTROL CENTER
(600A, 480V, 3Ø, 3W)

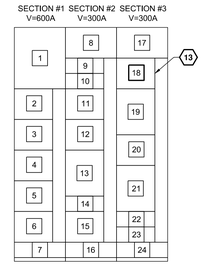

3 **MOTOR CONTROL CENTER "COM" FRONT ELEVATION**
Scale: 1/2" = 1'-0"

MOTOR CONTROL CENTER "MCC-1"
GENERAL ELECTRIC 8000 LINE CONTROL CENTER
(600A, 480V, 3Ø, 3W)

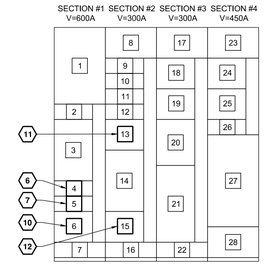

4 **MOTOR CONTROL CENTER "MCC-1" FRONT ELEVATION**
Scale: 1/2" = 1'-0"

MOTOR CONTROL CENTER "MCC-2" - CIRCUIT DESIGNATIONS

MCC SECTION #1
1. MAIN INCOMING LUGS.
2. SPACE.
3. MOTOR CONTROL CENTER "COM" FEEDER BREAKER.
4. SPARE
5. SPARE
6. STEAM BOILER "SB-2" (5)
7. SPACE.

MCC SECTION #2
8. SPACE.
9. FUEL OIL PUMP #2.
10. SPARE
11. DEAERATOR "DE-1" (8)
12. SPACE.
13. SPACE.
14. SPACE.
15. ASH SILO BLOWER #2.
16. SPACE.

MCC SECTION #3
17. SPACE.
18. SPARE
19. SPARE
20. SPARE F.D. FAN (FUTURE).
21. SPARE
22. SPACE.

MCC SECTION #4
23. SPACE. (4)
24. STEAM BOILER SB-1
25. EMERGENCY EXHAUST FAN EF-1 (3)
26. SPACE.
27. SPARE
28. SPACE.

MOTOR CONTROL CENTER "COM" - CIRCUIT DESIGNATIONS

MCC SECTION #1
1. MAIN INCOMING LUGS.
2. SPARE
3. SPACE.
4. SPARE
5. SPARE.
6. SPARE
7. SPACE.

MCC SECTION #2
8. SPACE.
9. SPARE
10. SPARE
11. SPARE
12. SPARE
13. UTILITY TRANSFORMER FEEDER.
14. TO PROCESS UPS.
15. SPACE.
16. SPACE.

MCC SECTION #3
17. SPACE.
18. AIR COMPRESSOR (13)
19. SPARE
20. SPACE.
21. SPACE.
22. SPARE
23. SPARE
24. SPACE

MOTOR CONTROL CENTER "MCC-1" - CIRCUIT DESIGNATIONS

MCC SECTION #1
1. MAIN INCOMING LUGS.
2. SPACE.
3. MOTOR CONTROL CENTER "COM" FEEDER BREAKER.
4. HOT WATER BOILER "HWB-1" (6)
5. HOT WATER BOILER "HWB-2" (7)
6. HOT WATER PUMP "HWP-1" (10)
7. SPACE.

MCC SECTION #2
8. SPACE.
9. SPARE
10. FUEL OIL PUMP #1
11. 480V WELDING RECEPTACLES #1A & #1B
12. SPARE
13. HOT WATER PUMP "HWP-2" (11)
14. SPACE.
15. HOT WATER PUMP "HWP-3" (12)
16. SPACE.

MCC SECTION #3
17. SPACE.
18. SPARE
19. SPARE
20. SPARE
21. SPARE
22. SPACE.

MCC SECTION #4
23. SPACE.
24. SPARE
25. SPACE
26. SPACE.
27. SPARE
28. SPACE.

B	11/15/19 IGA PRICING		
A	11/1/19 IGA PRICING		

RECORD REVISIONS

SEAL

SIGNATURE DATE

ENTECH ENGINEERING
1.800.825.1372
www.entecheng.com
ENTECH # 5787.001

COMMONWEALTH OF PENNSYLVANIA
DEPARTMENT OF GENERAL SERVICES
HARRISBURG, PENNSYLVANIA

D.G.S. PROJECT No. GESA 2018-1

GESA PROJECT
SCI HOUTZDALE
HOUTZDALE, CLEARFIELD COUNTY, PA

CENTRAL PLANT 480V ONE LINE DIAGRAM

VERIFY SCALE
BAR IS ONE (1) INCH LONG ON ORIGINAL DRAWING:
0 1
IF BAR IS NOT ONE (1) INCH LONG, ADJUST SCALE ACCORDINGLY

CONTRACTOR SHALL FIELD VERIFY ALL DIMENSIONS. VARIANCE FROM CONTRACT DOCUMENTS NOT PERMITTED WITHOUT PROFESSIONAL & BUREAU OF CONSTRUCTION APPROVAL.

DRAWN BY	DATE	DRAWING No.
SCH	11/1/2019	E-602
CHECKED BY	SCALE	
DEM	AS NOTED	25 OF 25

FILE PATH: H:\0005787.001\04-CAD\SheetFiles\E-602.dwg PLOTTED: 2019.11.15 05:05 PM PLOTTED BY: Michael Rispmiller
LAST SAVED: 2019.11.15 04:57 PM

PIPING SUPPORT DESIGN

SKETCH	DESCRIPTION
#1	SUPPORT #1
#2 & #3	SUPPORT #2
#4	SUPPORT #3
#5	SUPPORT #4
#6	SUPPORT #5
#7	SUPPORTS #6 TO #8
#8	BLDG 5: PLAN SKETCH (LAUNDRY, COMISSARY)
#9	SUPPORT #9
#10	SUPPORT #10
#11	SUPPORTS #11 & #12
#12	BLDG 1: FACILITY ADMINISTRATION AREA
#13	BLDG 2: VISITING INTAKE & SECURITY ADMINISTRATION AREA
#14	BLDG 4: DIETARY SERVICES AREA
#15	BLDG 7: LEARNING RESOURCES AREA
#16	SALLYPORT AREA
#17	BLDG C HOUSING UNIT 1: L3 HOUSING AREA
#18	BLDG 5: LAUNDRY, COMISSARY AREA
#19	JOIST REINFORCEMENT DETAIL

ENTECH ENGINEERING
Reading, PA • Pottsville, PA • Mountaintop, PA • Lititz, PA • Pittsburgh, PA

Project: Houtzdale
Subject: SUPPORT #1
Project No. 5787.001
Date 11-5-19
By CA
Page 9A of

Comments

SUPPT. #1

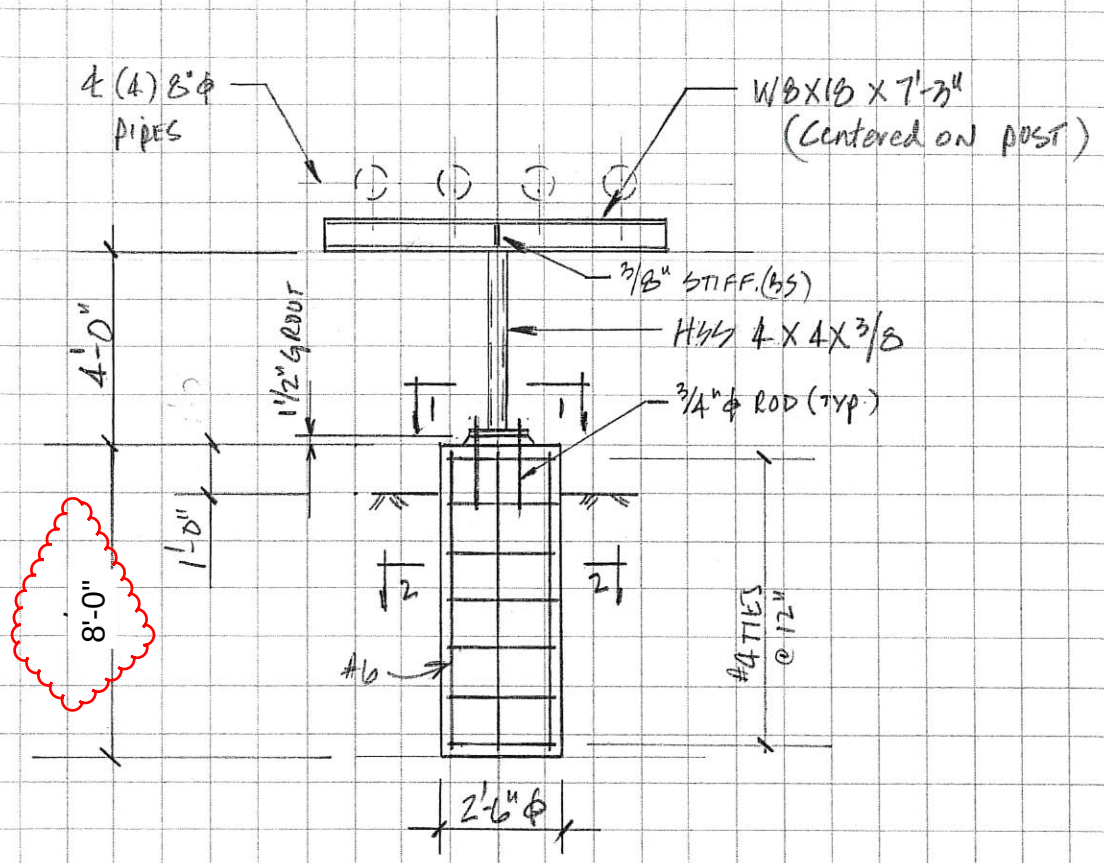

ELEVATION

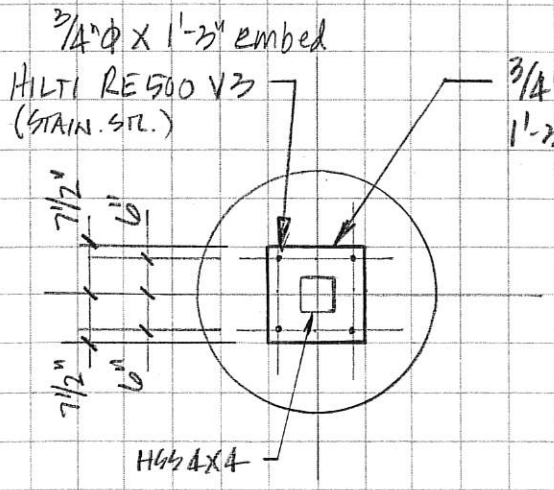

SECT 1-1

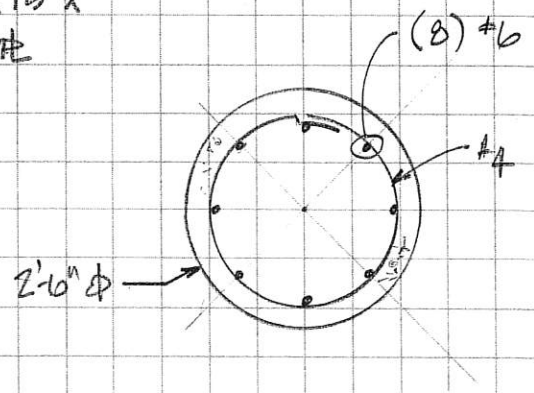

SECT 2-2

SKETCH #1

ENTECH ENGINEERING
Reading, PA • Pottsville, PA • Mountaintop, PA • Lititz, PA • Pittsburgh, PA

Project: Houtzdale
Subject: Support #2
Project No. 5787.001
Date 11-5-19
By CA
Page 16f of

Comments

Suppt. #2

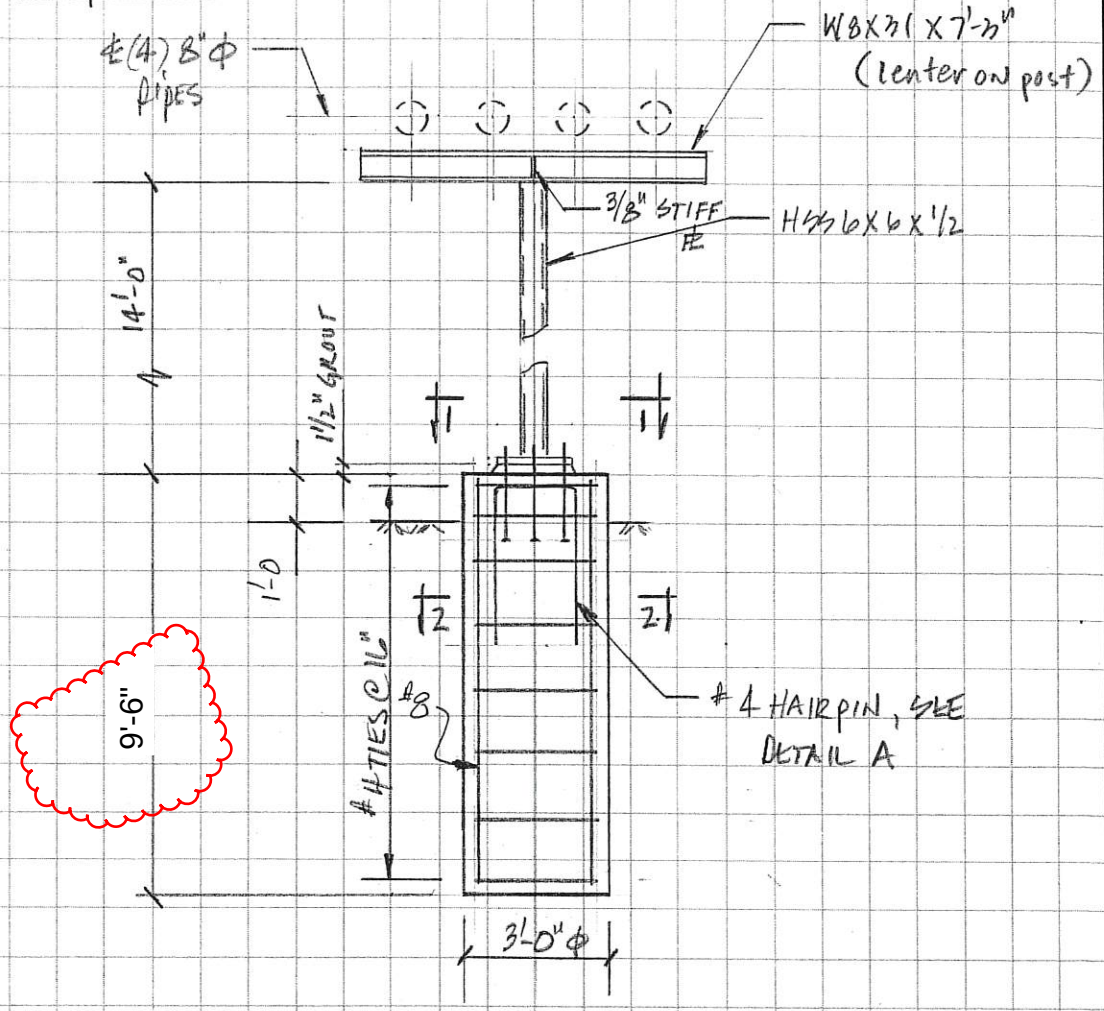

ELEVATION

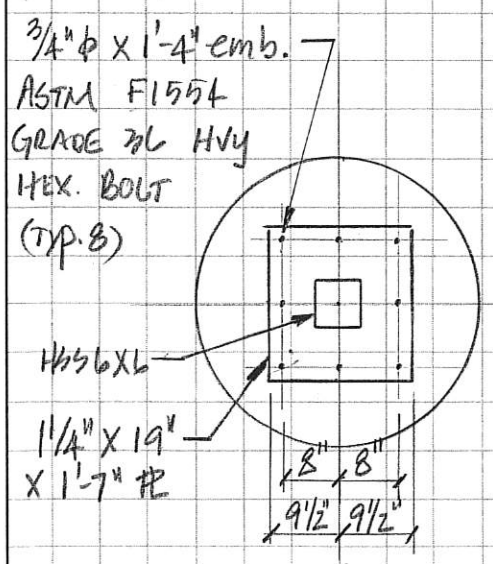

SECT 1-1

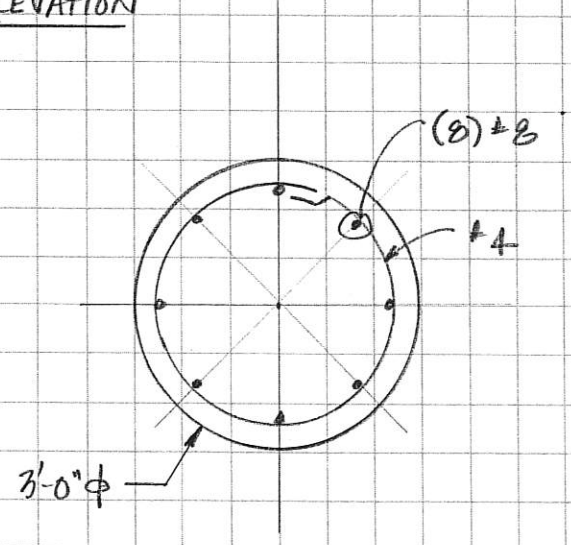

SECT 2-2

SKETCH #2

ENTECH ENGINEERING
Reading, PA • Pottsville, PA • Mountaintop, PA • Lititz, PA • Pittsburgh, PA

Project: Houtzdale
Subject: Support #2
Project No. 5787.001
Date 11-5-19
By CA
Page 16g of

Comments

Suppt. #2

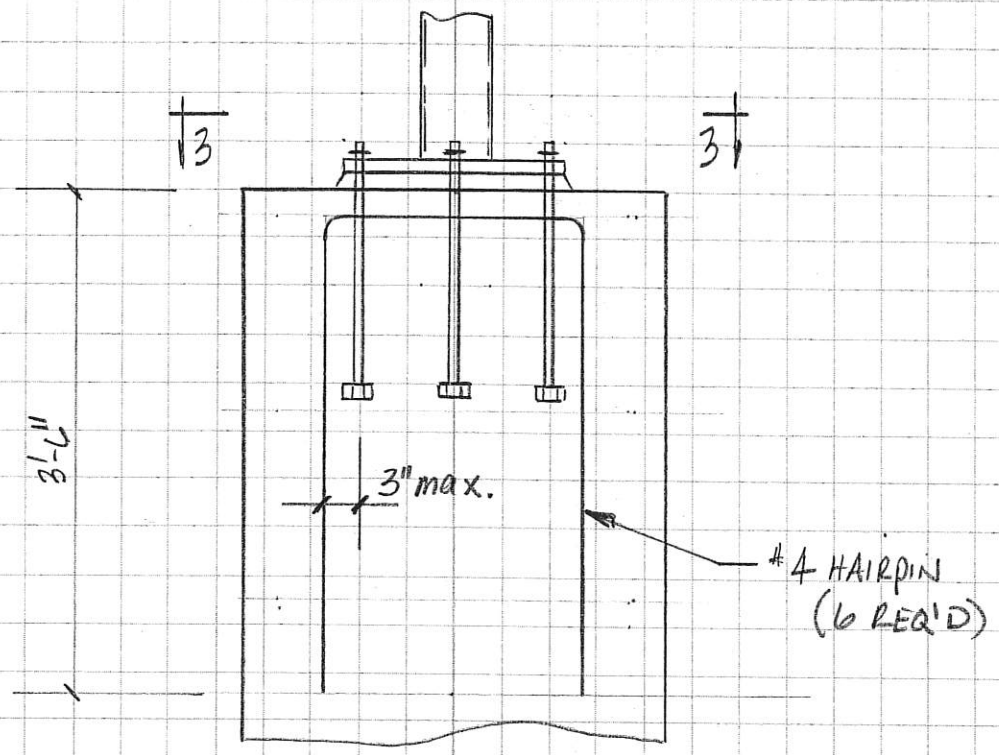

DETAIL A

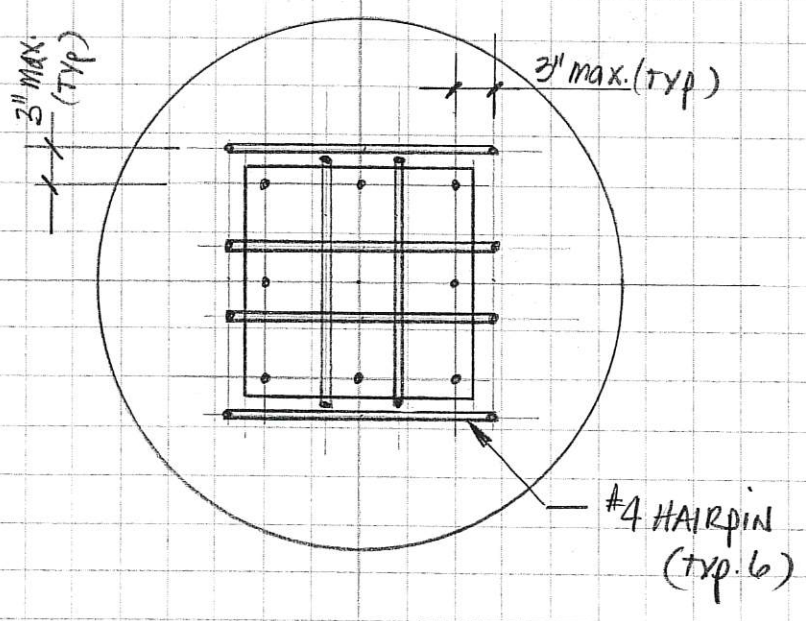

SECT 3-3 (PLAN)

SKETCH #3

ENTECH ENGINEERING
Reading, PA • Pottsville, PA • Mountaintop, PA • Lititz, PA • Pittsburgh, PA

Project: HOUTZDALE
Subject: SUPPT. #3
Project No. 5787.001
Date 11-5-19
By CA
Page 18 of

Comments

SUPPT #3

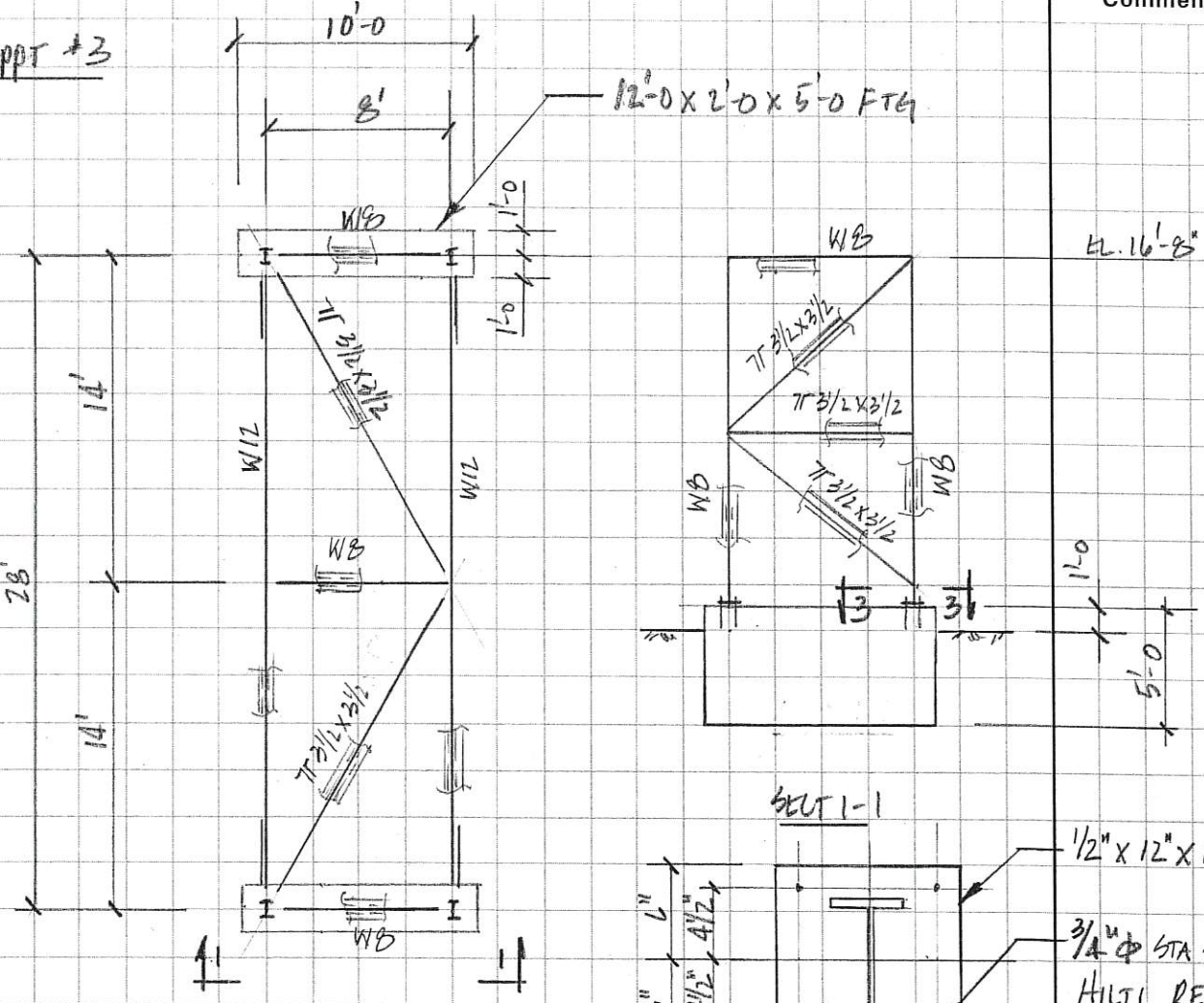

SKETCH #4

ENTECH ENGINEERING
Reading, PA • Pottsville, PA • Mountaintop, PA • Lititz, PA • Pittsburgh, PA

Project: Houtzdale
Subject: Support #4
Project No. 5787.001
Date 11-5-19
By CA
Page 25 of

Comments

Suppt #4

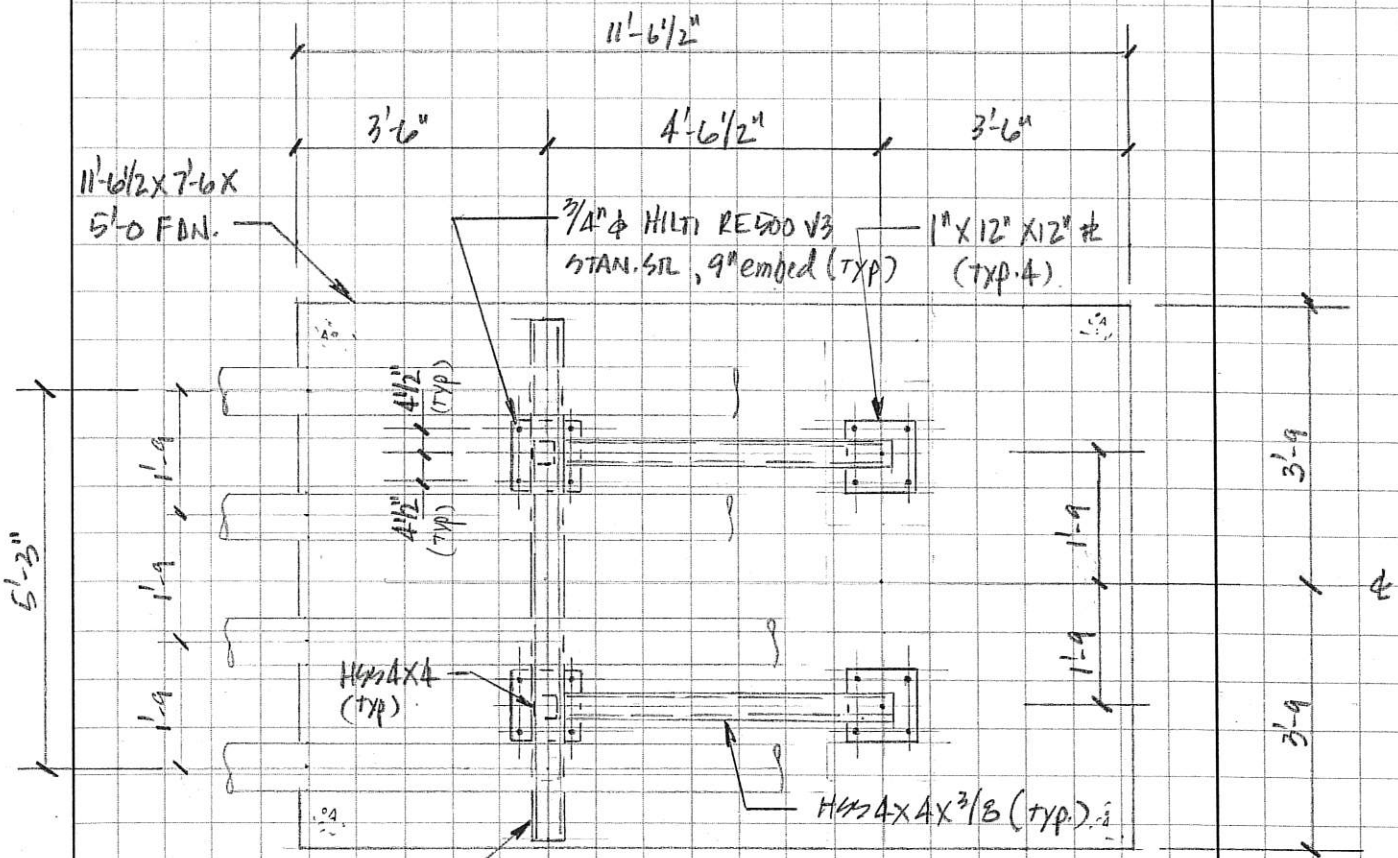

PLAN

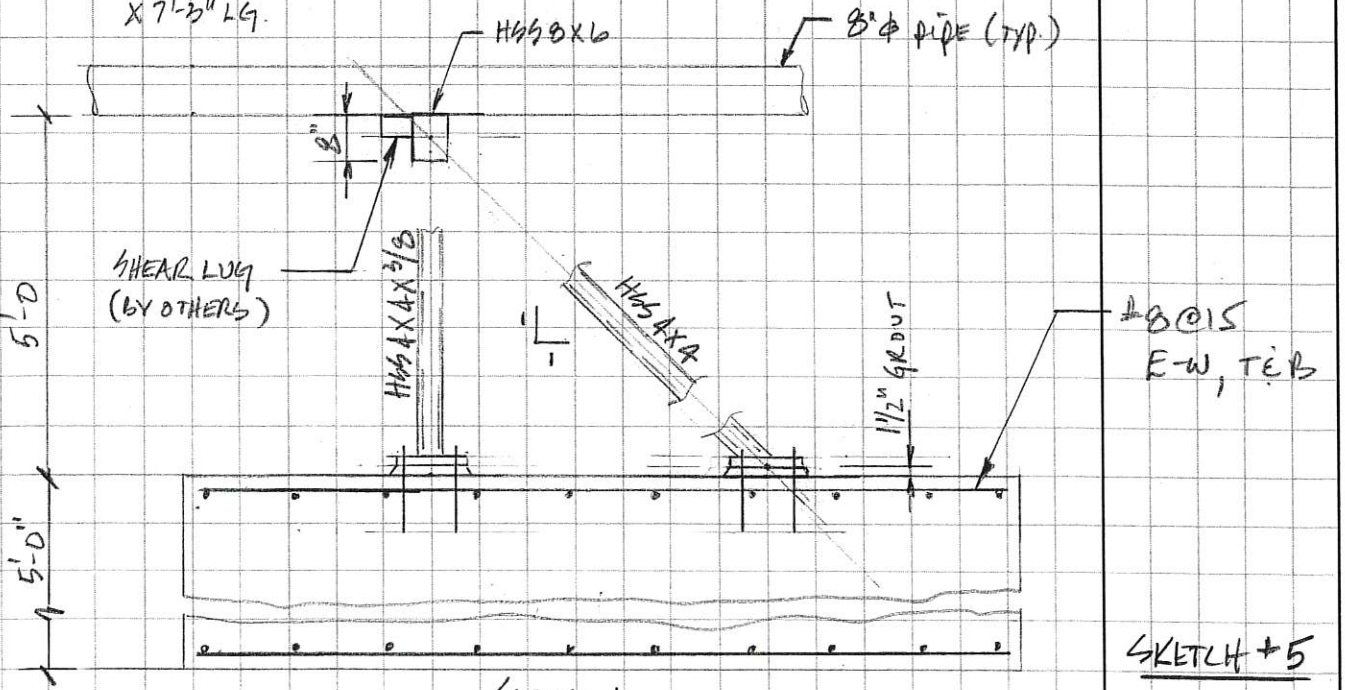

SECTION

SKETCH #5

ENTECH ENGINEERING

Reading, PA • Pottsville, PA • Mountaintop, PA • Lititz, PA • Pittsburgh, PA

Project: Houtzdale

Subject: Support #5

Project No. 5787.001

Date: 11-5-19

By: CA

Page 31a of

Comments

Support #5

(Area East of Building 4, approximately 110' long)

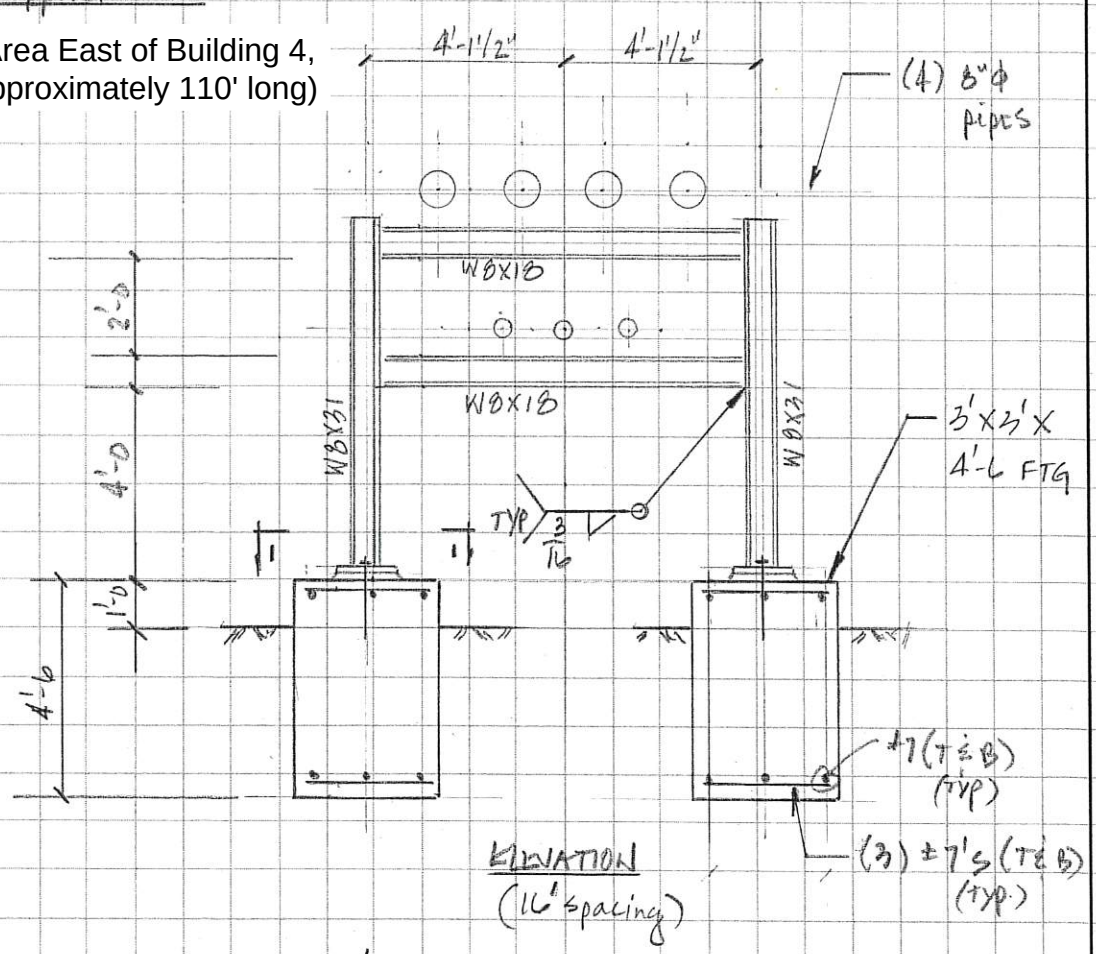

ELEVATION
(16' spacing)

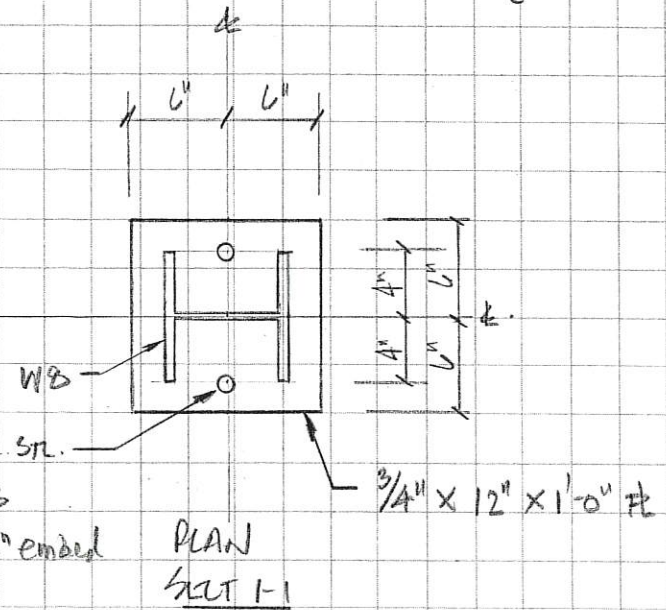

PLAN
SECT 1-1

SKETCH #6

ENTECH ENGINEERING
Reading, PA • Pottsville, PA • Mountaintop, PA • Lititz, PA • Pittsburgh, PA

Project: Houtzdale
Subject: Supports #6, #7 + #8
Project No. 5787.001
Date 11-5-19
By CLL
Page 38b of

Comments

Supports 6, 7 & 8

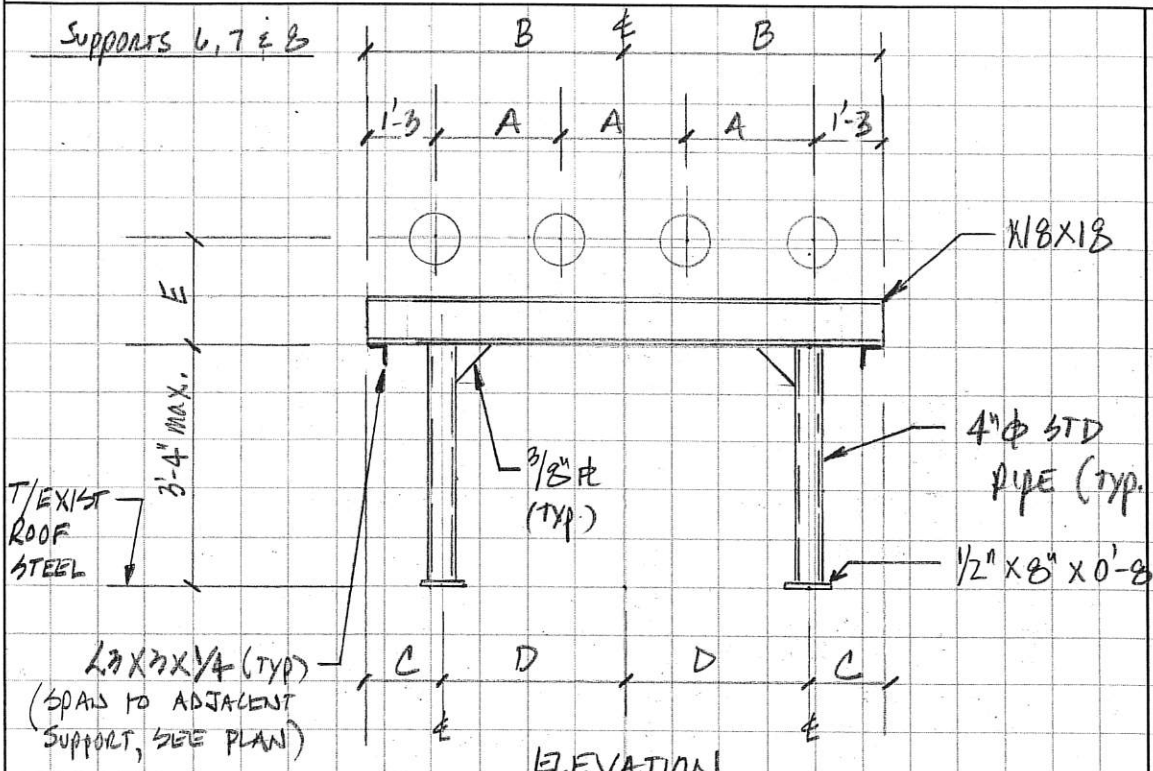

ELEVATION

Support Type	(4) 3"ϕ pipes	(4) 4"ϕ pipes	(4) 8"ϕ pipes
	6	7	8
A	1'-3 1/2	1'-4 1/2"	1'-8 7/8"
B	3'-2 1/4	3'-3 3/4"	3'-10 1/2"
C	8 1/4"	8 3/4"	8 1/2"
D	2'-6"	2'-7"	3'-2"
E	1'-2 7/8"	1'-3 3/8"	1'-5 7/16"

SKETCH #7

ENTECH ENGINEERING

Reading • Pottsville • Mountaintop • Lititz • Pittsburgh • State College • Hawley

Project: Houtzdale

Subject: PLAN SKETCH (LAUNDRY COMMISSARY)

Project No. 5767.001

Date 11-11-19

By CA

Page 54a of

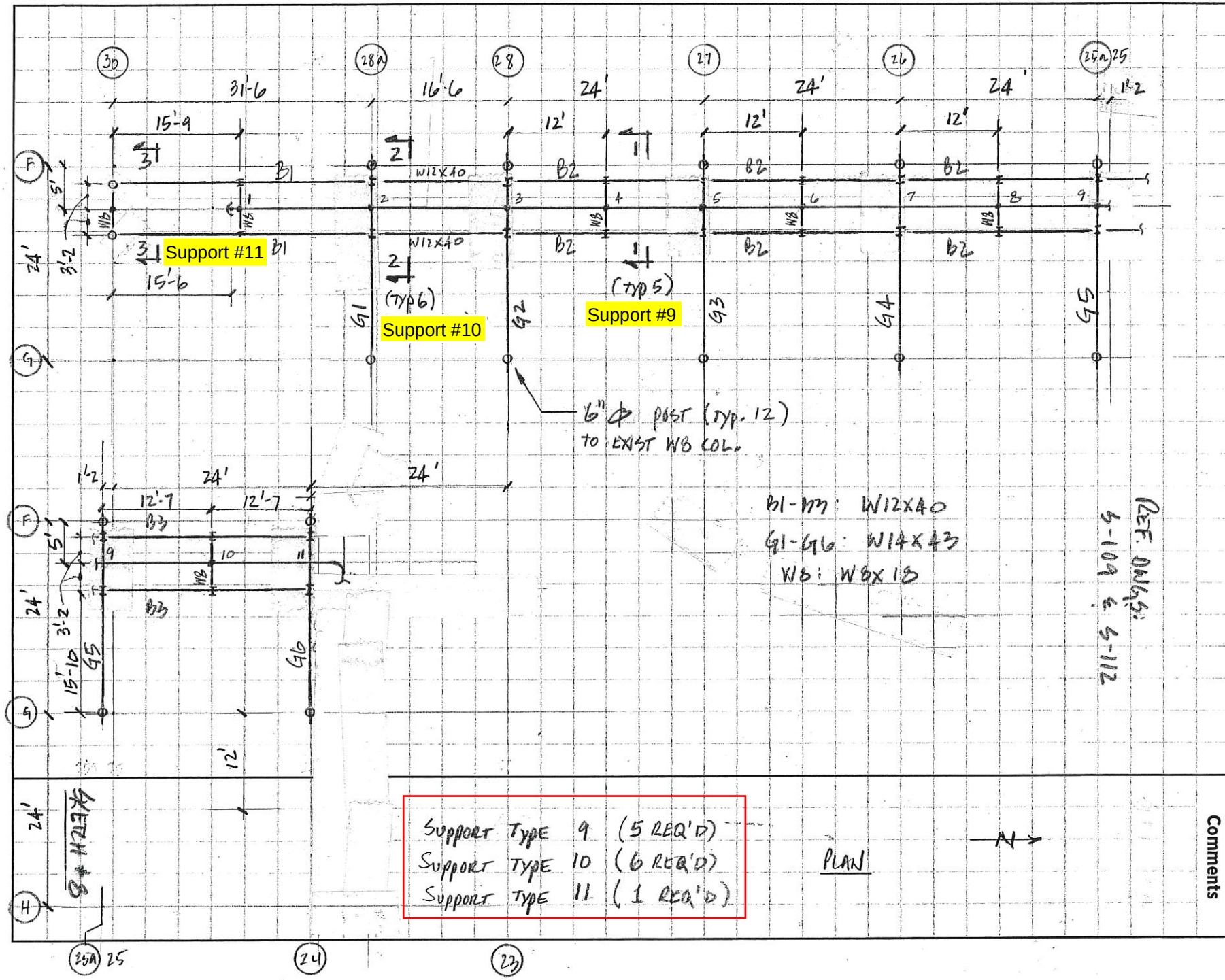

Comments

ENTECH ENGINEERING

Reading, PA • Pottsville, PA • Mountaintop, PA • Lititz, PA • Pittsburgh, PA

Project: Houtzdale

Subject: Support #9

Project No. 5787.001

Date 11-5-19

By CR

Page 55 of

Comments

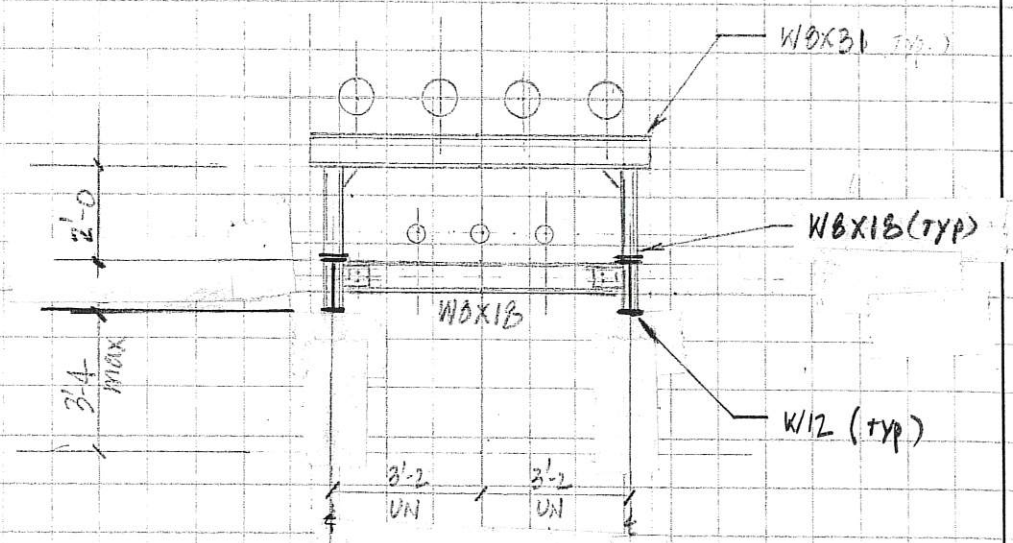

ELEVATION 1-1

Support #9

SKETCH #9

ENTECH ENGINEERING

Reading, PA • Pottsville, PA • Mountaintop, PA • Lititz, PA • Pittsburgh, PA

Project: Houtzdale

Subject: Support #10

Project No. 578T.001

Date: 11-5-19

By: CA

Page 55a of

Comments

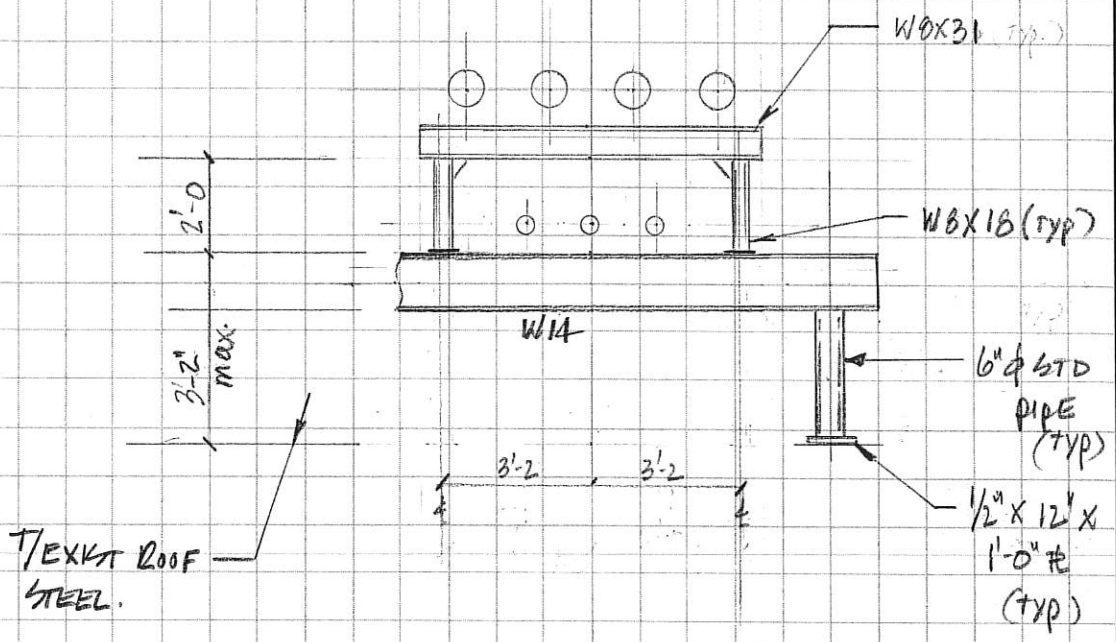

ELEVATION 2-2

SUPPORT #10

SKETCH #10

ENTECH ENGINEERING
Reading, PA • Pottsville, PA • Mountaintop, PA • Lititz, PA • Pittsburgh, PA

Project: Houtzdale
Subject: Support #11 & #12

Project No. 5787
Date 11-5-19
By SLG CA
Page 5/5 of

Comments

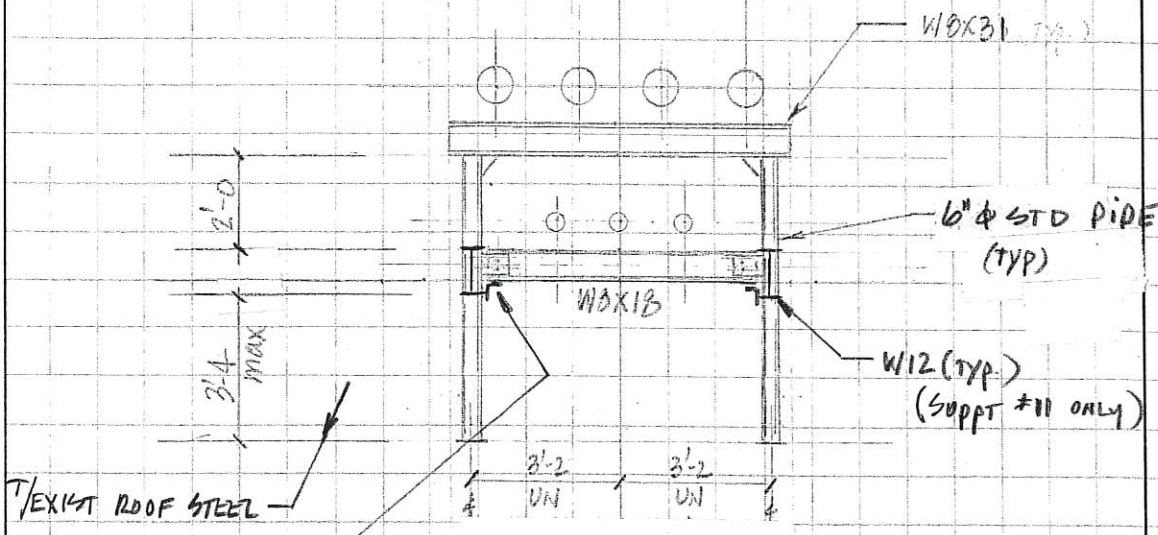

(16' MAX. SPANS)
ELEVATION 3-3

Support #11 & #12

SKETCH #11

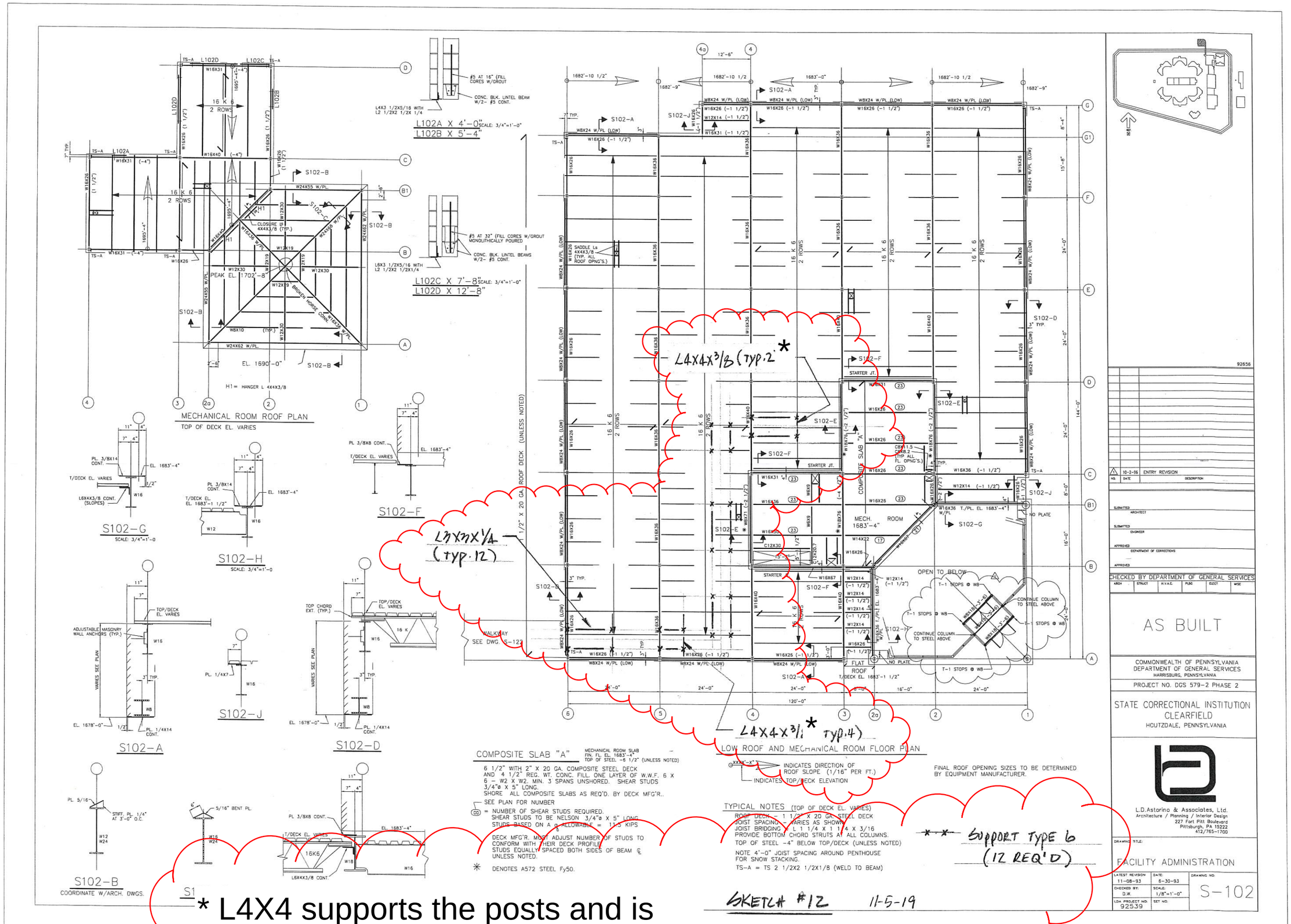
MECHANICAL ROOM ROOF PLAN
TOP OF DECK EL. VARIES
L102A X 4'-0"
L102B X 5'-4"
L102C X 7'-8"
L102D X 12'-8"
S102-G
S102-H
S102-F
S102-A
S102-J
S102-D
S102-B
COORDINATE W/ARCH. DWGS.
COMPOSITE SLAB "A"
6 1/2" WITH 2" X 20 GA. COMPOSITE STEEL DECK AND 4 1/2" REG. WT. CONC. FILL. ONE LAYER OF W.W.F. 6 X 6 – W2 X W2. MIN. 3 SPANS UNSHORED. SHEAR STUDS 3/4"ø X 5" LONG.
SHORE ALL COMPOSITE SLABS AS REQ'D. BY DECK MFG'R..
SEE PLAN FOR NUMBER
= NUMBER OF SHEAR STUDS REQUIRED.
SHEAR STUDS TO BE NELSON 3/4"ø X 5" LONG.
STUDS BASED ON A 6 ALLOWABLE = 11.3 KIPS
DECK MFG'R. MUST ADJUST NUMBER OF STUDS TO CONFORM WITH THEIR DECK PROFILE. STUDS EQUALLY SPACED BOTH SIDES OF BEAM ℄ UNLESS NOTED.
* DENOTES A572 STEEL Fy50.
LOW ROOF AND MECHANICAL ROOM FLOOR PLAN
INDICATES DIRECTION OF ROOF SLOPE (1/16" PER FT.)
INDICATES TOP DECK ELEVATION
FINAL ROOF OPENING SIZES TO BE DETERMINED BY EQUIPMENT MANUFACTURER.
TYPICAL NOTES (TOP OF DECK EL. VARIES)
ROOF DECK – 1 1/2" X 20 GA. STEEL DECK
JOIST SPACING – VARIES AS SHOWN
JOIST BRIDGING – L 1 1/4 X 1 1/4 X 3/16
PROVIDE BOTTOM CHORD STRUTS AT ALL COLUMNS.
TOP OF STEEL –4" BELOW TOP/DECK (UNLESS NOTED)
NOTE 4'-0" JOIST SPACING AROUND PENTHOUSE FOR SNOW STACKING.
TS–A = TS 2 1/2X2 1/2X1/8 (WELD TO BEAM)
L4X4X3/8 (typ.2)*
L3X3X1/4 (typ.12)
L4X4X3/8 (typ.4)*
SUPPORT TYPE 6 (12 REQ'D)
SKETCH #12 11-5-19
* L4X4 supports the posts and is located at the existing top of steel
AS BUILT
COMMONWEALTH OF PENNSYLVANIA
DEPARTMENT OF GENERAL SERVICES
HARRISBURG, PENNSYLVANIA
PROJECT NO. DGS 579-2 PHASE 2
STATE CORRECTIONAL INSTITUTION
CLEARFIELD
HOUTZDALE, PENNSYLVANIA
L.D.Astorino & Associates, Ltd.
Architecture / Planning / Interior Design
227 Fort Pitt Boulevard
Pittsburgh, PA 15222
412/765-1700
FACILITY ADMINISTRATION
S-102

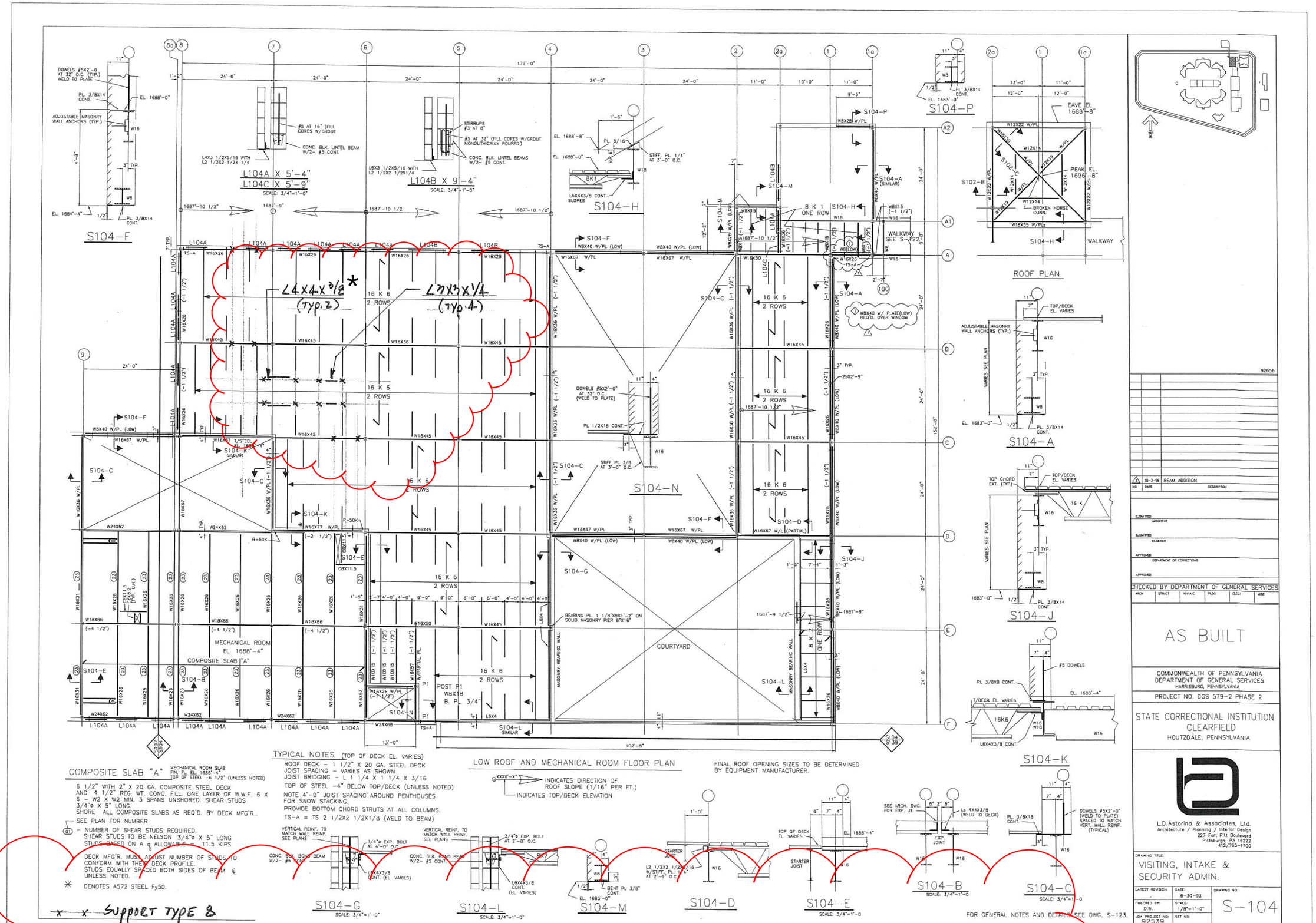

COMPOSITE SLAB "A" MECHANICAL ROOM SLAB FIN. FL. EL. 1688'-4" TOP OF STEEL -6 1/2" (UNLESS NOTED)

6 1/2" WITH 2" X 20 GA. COMPOSITE STEEL DECK AND 4 1/2" REG. WT. CONC. FILL. ONE LAYER OF W.W.F. 6 X 6 – W2 X W2 MIN. 3 SPANS UNSHORED. SHEAR STUDS 3/4"ø X 5" LONG.
SHORE. ALL COMPOSITE SLABS AS REQ'D. BY DECK MFG'R..
SEE PLAN FOR NUMBER
(01) = NUMBER OF SHEAR STUDS REQUIRED.
SHEAR STUDS TO BE NELSON 3/4"ø X 5" LONG
STUDS BASED ON A ℄ ALLOWABLE = 11.5 KIPS
DECK MFG'R. MUST ADJUST NUMBER OF STUDS TO CONFORM WITH THEIR DECK PROFILE.
STUDS EQUALLY SPACED BOTH SIDES OF BEAM ℄ UNLESS NOTED.
* DENOTES A572 STEEL Fy50.

TYPICAL NOTES (TOP OF DECK EL. VARIES)
ROOF DECK – 1 1/2" X 20 GA. STEEL DECK
JOIST SPACING – VARIES AS SHOWN
JOIST BRIDGING – L 1 1/4 X 1 1/4 X 3/16
TOP OF STEEL -4" BELOW TOP/DECK (UNLESS NOTED)
NOTE 4'-0" JOIST SPACING AROUND PENTHOUSES FOR SNOW STACKING.
PROVIDE BOTTOM CHORD STRUTS AT ALL COLUMNS.
TS-A = TS 2 1/2X2 1/2X1/8 (WELD TO BEAM)

XXXX'-X" INDICATES DIRECTION OF ROOF SLOPE (1/16" PER FT.)
INDICATES TOP/DECK ELEVATION

FINAL ROOF OPENING SIZES TO BE DETERMINED BY EQUIPMENT MANUFACTURER.

FOR GENERAL NOTES AND DETAILS SEE DWG. S-123.

~~x x~~ SUPPORT TYPE 8 (7 REQ'D)

* L4X4 supports the posts and is

6" dia. post (typ 4) to exist. W8 column

L3x3x1/4 (typ.6)

Support Type 12 (7 REQ'D)

FOR BEAM SIZES SEE DRAWING S110

BENT "A" (SEE DRAWING S110)

COMPOSITE SLAB "A"

6 1/2" WITH 2" X 20 GA. COMPOSITE STEEL DECK AND 4 1/2" REG. WT. CONC. FILL. ONE LAYER OF W.W.F. 6 X 6 - W2 X W2 MIN. 3 SPANS UNSHORED. SHEAR STUDS 3/4 ø X 5" LONG. SHORE ALL COMPOSITE SLABS AS REQ'D. BY DECK MFG'R.

SEE PLAN FOR NUMBER

(00) = NUMBER OF SHEAR STUDS REQUIRED. SHEAR STUDS TO BE NELSON 3/4"ø X 5" LONG STUDS BASED ON A q ALLOWABLE = 11.5 KIPS

DECK MFG'R. MUST ADJUST NUMBER OF STUDS TO CONFORM WITH THEIR DECK PROFILE. STUDS EQUALLY SPACED BOTH SIDES OF BEAM ℄ UNLESS NOTED.

✳ DENOTES A572 STEEL Fy50.

LOW ROOF AND MECHANICAL ROOM FLOOR PLAN

XXXX'-X" — INDICATES DIRECTION OF ROOF SLOPE (1/16" PER FT.)

INDICATES TOP/DECK ELEVATION

TYPICAL NOTES (TOP OF DECK EL. VARIES)

ROOF DECK – 1 1/2" X 20 GA. STEEL DECK
JOIST SPACING – VARIES AS SHOWN
JOIST BRIDGING – L 1 1/4 X 1 1/4 X 3/16
PROVIDE BOTTOM CHORD STRUTS AT ALL COLUMNS.
TOP OF STEEL –4" BELOW TOP/DECK (UNLESS NOTED)
FINAL ROOF OPENING SIZES TO BE DETERMINED BY EQUIPMENT MANUFACTURER.
TS–A = TS 2 1/2X2 1/2X1/8 (WELD TO BEAM)

S109–A SCALE: 3/4"=1'-0"

S109–B

S109–C

S109–D

S109–E

S109–F

S109–G

FOR GENERAL NOTES AND DETAILS SEE DWG. S–23.

SKETCH #14 11-11-19

92656

NO.	DATE	DESCRIPTION

SUBMITTED ARCHITECT

SUBMITTED ENGINEER

APPROVED DEPARTMENT OF CORRECTIONS

APPROVED

CHECKED BY DEPARTMENT OF GENERAL SERVICES

ARCH	STRUCT	H.V.A.C.	PLBG	ELECT	MISC

AS BUILT

COMMONWEALTH OF PENNSYLVANIA
DEPARTMENT OF GENERAL SERVICES
HARRISBURG, PENNSYLVANIA

PROJECT NO. DGS 579–2 PHASE 2

STATE CORRECTIONAL INSTITUTION
CLEARFIELD
HOUTZDALE, PENNSYLVANIA

L.D.Astorino & Associates, Ltd.
Architecture / Planning / Interior Design
227 Fort Pitt Boulevard
Pittsburgh, PA 15222
412/765-1700

DRAWING TITLE:

DIETARY SERVICES

LATEST REVISION	DATE: 6-30-93	DRAWING NO: S–109
CHECKED BY: D.W.	SCALE: 1/8"=1'-0"	
LDA PROJECT NO: 92539	SET NO:	

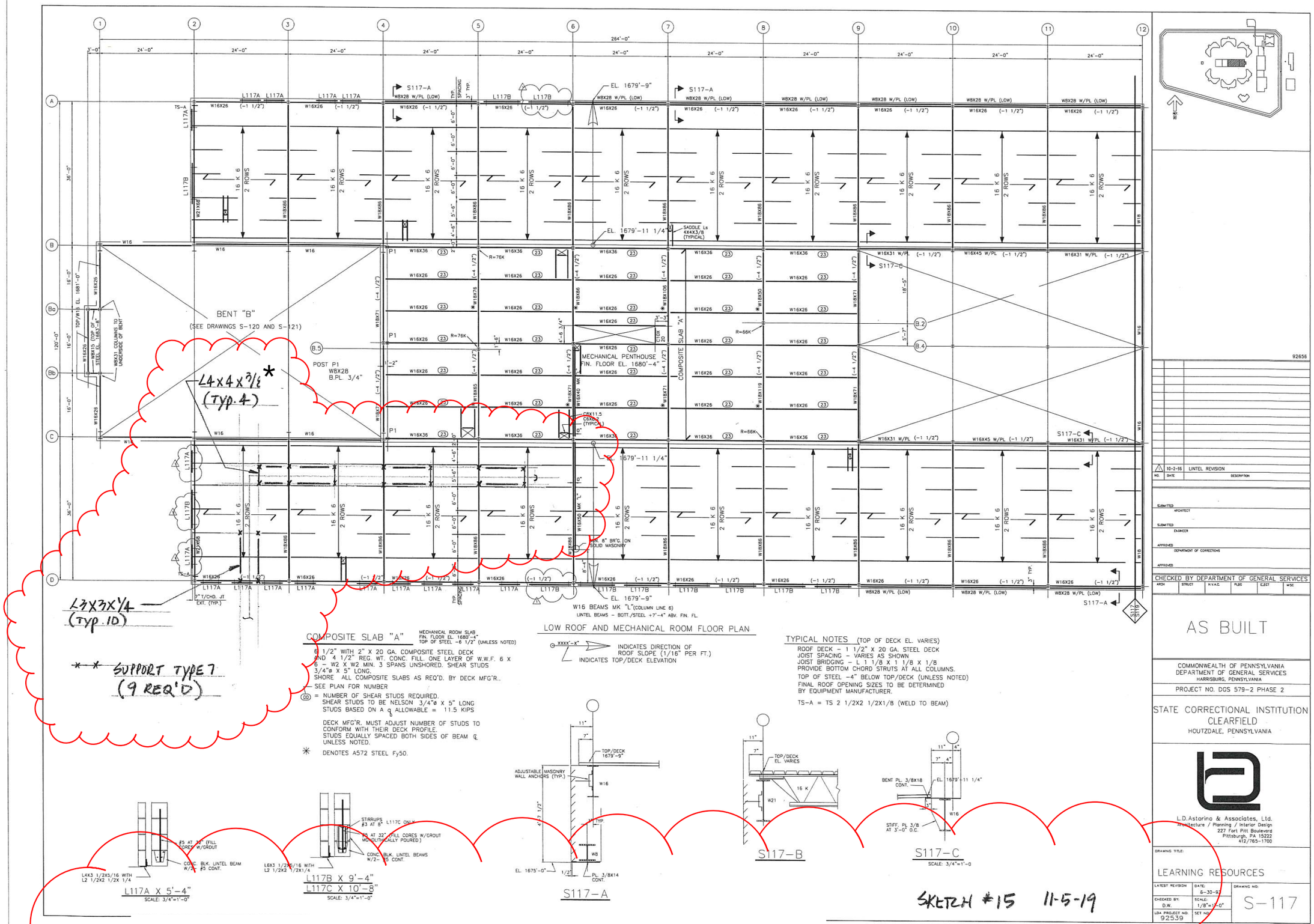

* L4X4 supports the posts and is located at the existing top of steel elevation

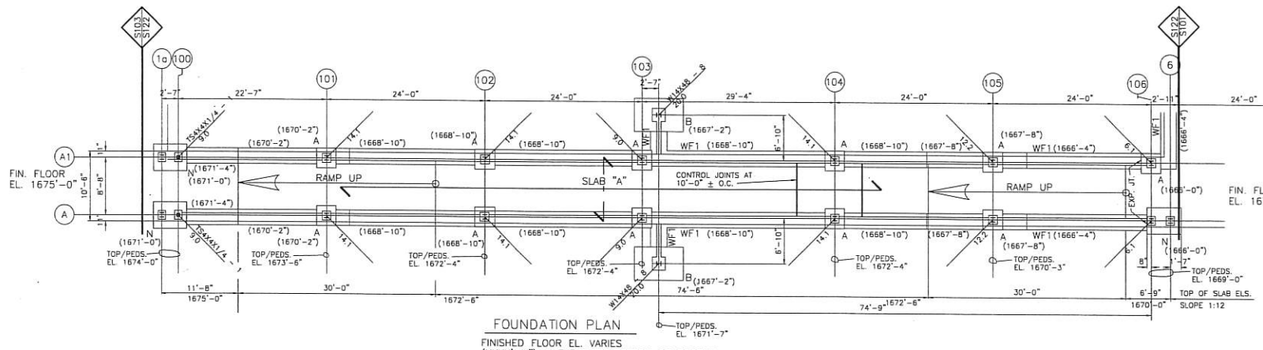

FOUNDATION PLAN

FINISHED FLOOR EL. VARIES
(XXXX'-X") = ELEVATION BOTTOM OF FOOTING
MASONRY WALLS: #5 AT 16" VERT. FILL ALL BLOCK CORES WITH GROUT.

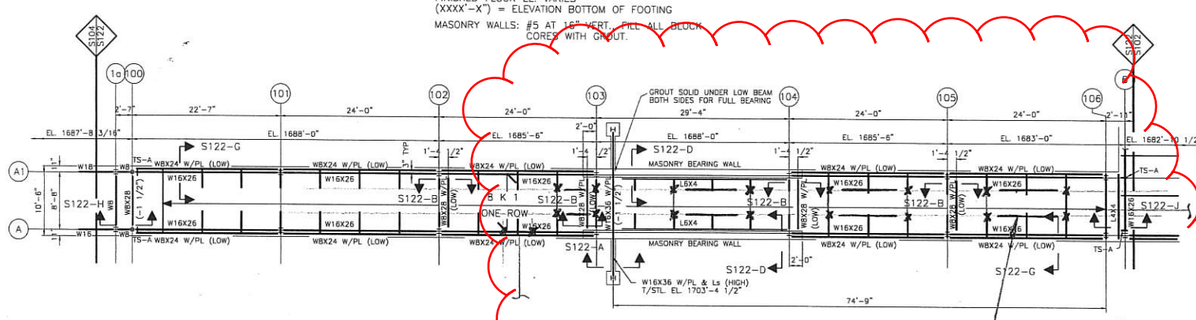

ROOF PLAN

TOP OF DECK EL. VARIES
TOP OF STEEL -4" BELOW TOP/DECK (UNLESS NOTED)

TYPICAL NOTES

ROOF DECK - 1 1/2" X 20 GA. STEEL DECK
JOIST SPACING - VARIES AS SHOWN
JOIST BRIDGING - L 1 1/8 X 1 1/8 X 1/8
PROVIDE BOTTOM CHORD STRUTS AT ALL COLUMNS.
TS-A = TS 3 1/2X2 1/2X1/8 (WELD TO BEAM)

L3X3X1/4 (TYP. 8)

SUPPORT TYPE 6 (9 REQ'D)

F_{BR} = 3 KIPS/SQ. FT.

FOOTING SCHEDULE

MK.	SIZE	REINF. EA. WAY
A	3'-0X3'-0X1'-0	3- #5
B	5'-0X7'-6X1'-8	7- #5 X 4'-6 SHORT WAY 6- #5 X 7'-0" LONG WAY
N	4'-0X5'-2X1'-4	8- #5 X 3'-6 SHORT WAY 5- #6 X 4'-8 LONG WAY

COLUMN BASE PLATES
A.S.T.M. A-36

TYPE	SIZE
1	1 X 12 X 12
* 8	1 1/4 X 18 X 18
9	1 X 10 X 10

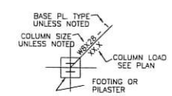

LEGEND

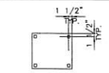

* BASE PL. TYPE 8 TO HAVE 4- 1 1/4"ø ANCHOR BOLTS

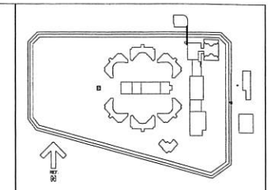

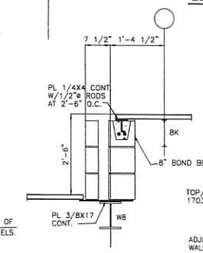

S122-B

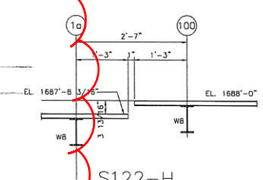

S122-H

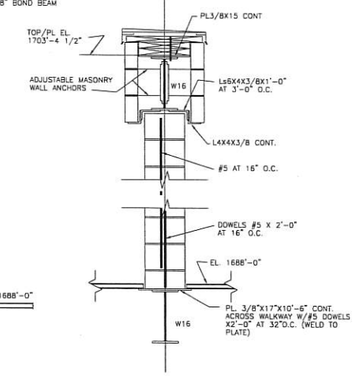

S122-A

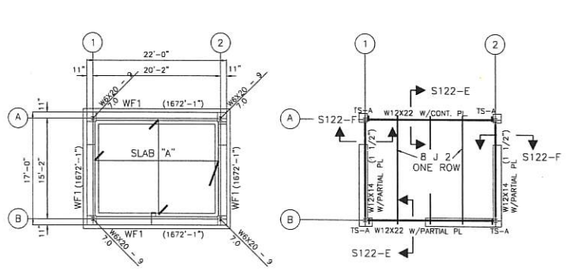

FOUNDATION PLAN

FINISHED FLOOR EL. 1675'-9"
(XXXX'-X") = ELEVATION BOTTOM OF FOOTING

ROOF PLAN

TOP OF DECK EL. 1686'-1"
TOP OF STEEL -4" (UNLESS NOTED)

VEHICULAR SALLY PORT PLANS

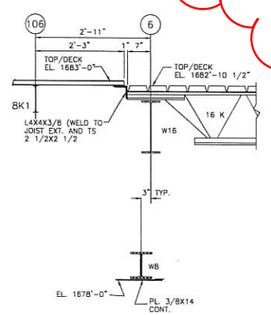

S122-J

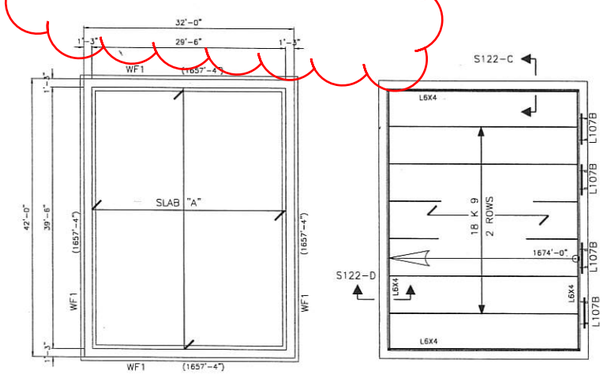

FOUNDATION PLAN

FINISHED FLOOR EL. 1661'-0"
(XXXX'-X") = ELEVATION BOTTOM OF FOOTING

ROOF PLAN

TOP OF DECK EL. VARIES

XXXX'-X" INDICATES DIRECTION OF ROOF SLOPE (1/16" PER FT.)
INDICATES TOP/DECK ELEVATION

TYPICAL NOTES

ROOF DECK - 1 1/2" X 20 GA. STEEL DECK
JOIST SPACING - VARIES AS SHOWN
JOIST BRIDGING - L 1 1/8 X 1 1/8 X 1/8

FIELD HOUSE PLANS

SLAB "A" (TYP.)

THICK CONCRETE SLAB ON GRADE WITH ONE LAYER W.W.F. 6 X 6 - W1.4 X W1.4

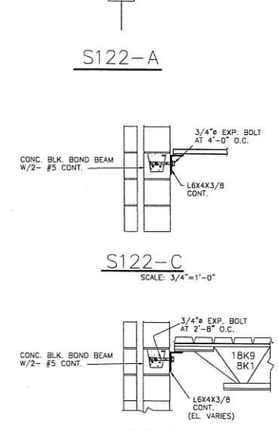

S122-C
SCALE: 3/4"=1'-0"

S122-D
SCALE: 3/4"=1'-0"

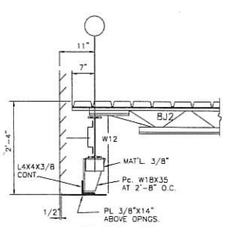

S122-E

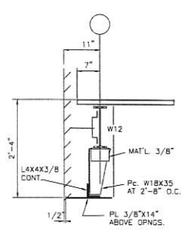

S122-F

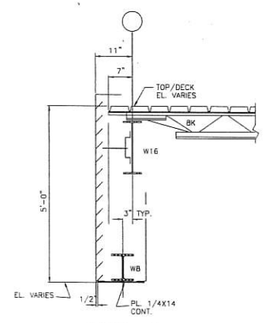

S122-G

SKETCH #16

11-5-19

FOR PEDESTAL AND WALL FOOTING DETAILS SEE DWG. S-142
FOR GENERAL NOTES AND DETAILS SEE DWG. S-123.

NO.	DATE	DESCRIPTION
1	10-2-96	BASE PLATE MODIFICATION

92656

SUBMITTED ARCHITECT
SUBMITTED ENGINEER
APPROVED DEPARTMENT OF CORRECTIONS
APPROVED

CHECKED BY DEPARTMENT OF GENERAL SERVICES
ARCH | STRUCT | H.V.A.C. | PLMB | ELECT | MISC

AS BUILT

COMMONWEALTH OF PENNSYLVANIA
DEPARTMENT OF GENERAL SERVICES
HARRISBURG, PENNSYLVANIA

PROJECT NO. DGS 579-2 PHASE 2

STATE CORRECTIONAL INSTITUTION
CLEARFIELD
HOUTZDALE, PENNSYLVANIA

L.D.Astorino & Associates, Ltd.
Architecture / Planning / Interior Design
227 Fort Pitt Boulevard
Pittsburgh, PA 15222
412/765-1700

DRAWING TITLE: W'LKWAY, SALLY PORT, FIELD HSE. PLANS,SECTS. & DETS.

LATEST REVISION	DATE: 6-30-93	DRAWING NO: S-122
CHECKED BY: D.W.	SCALE: 1/8"=1'-0"	
LDA PROJECT NO: 92539	SET NO:	

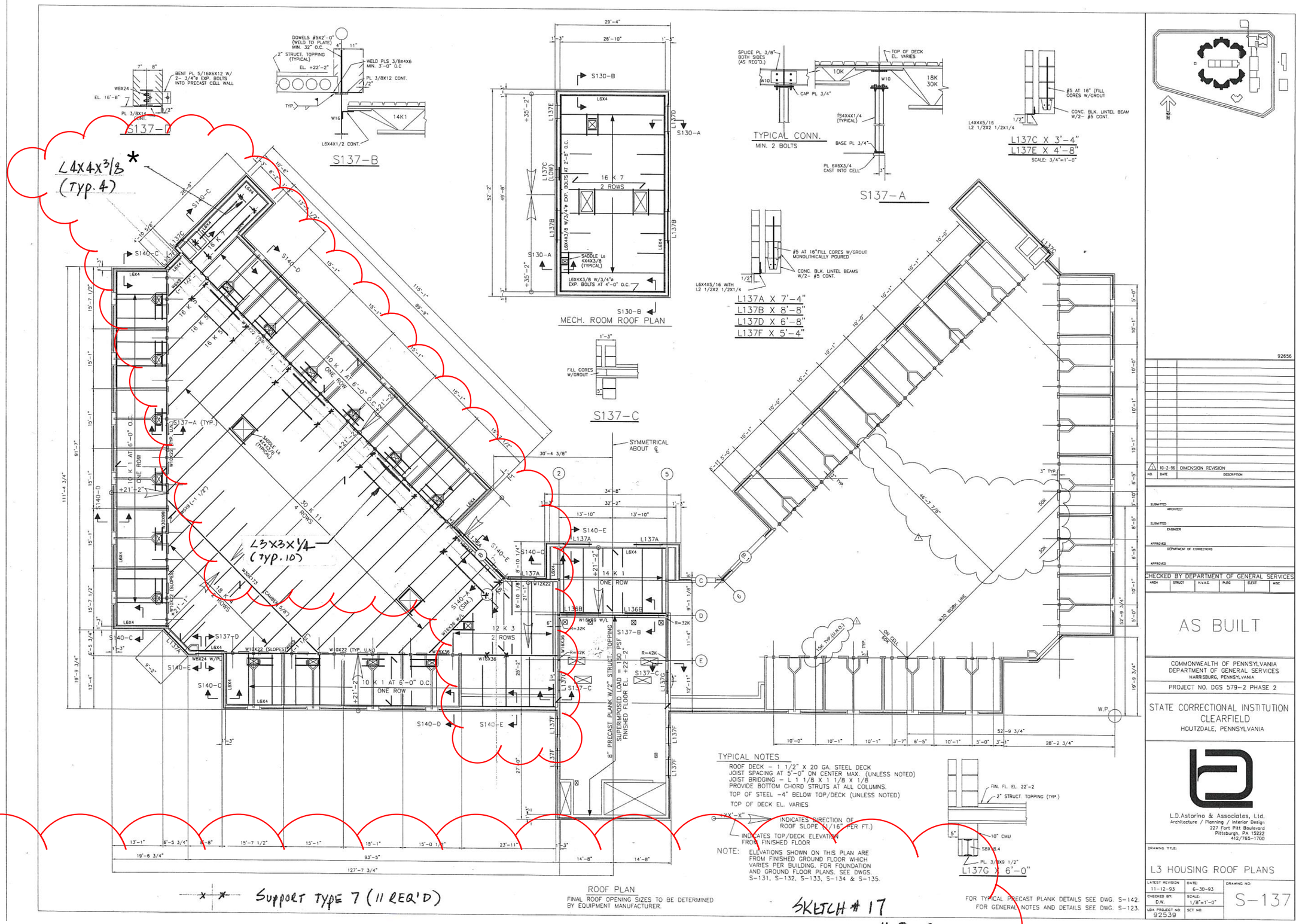

* L4X4 supports the posts and is located at the

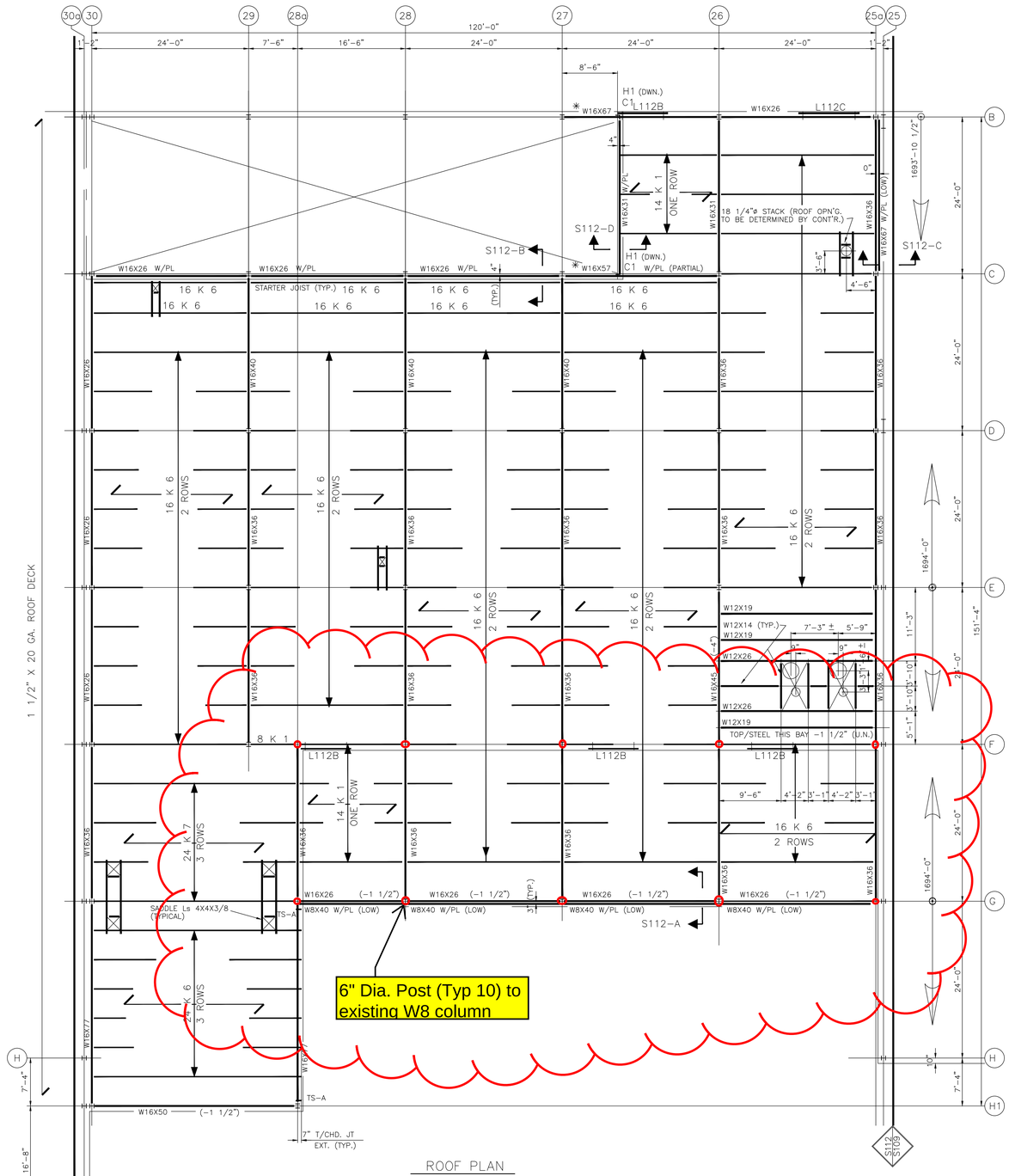

ROOF PLAN

TOP OF DECK EL. VARIES

XXXX'-X" — INDICATES DIRECTION OF ROOF SLOPE (1/16" PER FT.)

INDICATES TOP/DECK ELEVATION

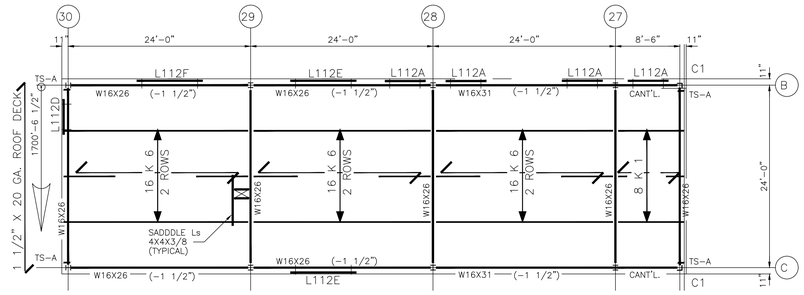

CLOSURE C1
L8X8X1/2
B.PL. 3/4"

HANGER H1
2-Ls 4X4X3/8

PENTHOUSE ROOF

TOP OF DECK EL. VARIES
TOP OF STEEL -4" (UNLESS NOTED)

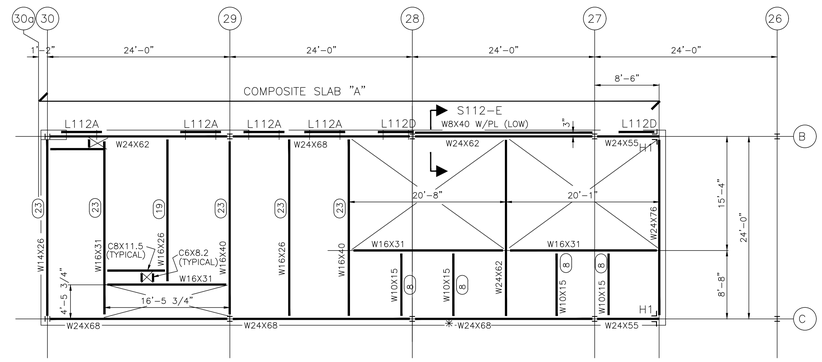

PENTHOUSE FLOOR PLAN

FINISHED FLOOR EL. 1688'-4"
TOP OF STEEL -6 1/2"

COMPOSITE SLAB "A"

6 1/2" WITH 2" X 20 GA. COMPOSITE STEEL DECK AND 4 1/2" REG. WT. CONC. FILL. ONE LAYER OF W.W.F. 6 X 6 - W2 X W2 MIN. 3 SPANS UNSHORED. SHEAR STUDS 3/4"ø X 5" LONG.
SHORE ALL COMPOSITE SLABS AS REQ'D. BY DECK MFG'R..

SEE PLAN FOR NUMBER

(00) = NUMBER OF SHEAR STUDS REQUIRED.
SHEAR STUDS TO BE NELSON 3/4"ø X 5" LONG
STUDS BASED ON A ℄ ALLOWABLE = 11.5 KIPS

DECK MFG'R. MUST ADJUST NUMBER OF STUDS TO CONFORM WITH THEIR DECK PROFILE.
STUDS EQUALLY SPACED BOTH SIDES OF BEAM ℄ UNLESS NOTED.

✳ DENOTES A572 STEEL Fy50.

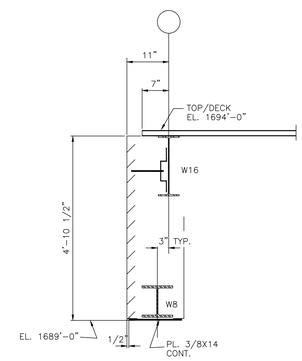

S112-A

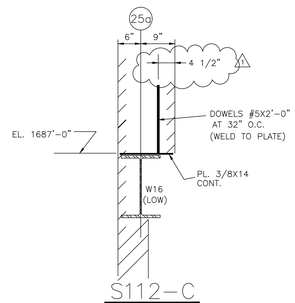

S112-C

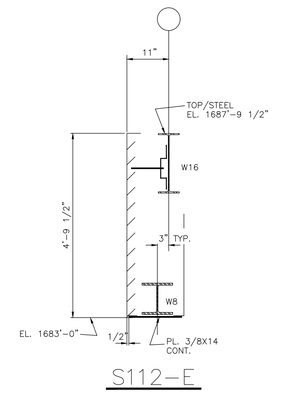

S112-E

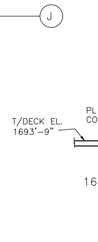

S112-B

SCALE: 3/4"=1'-0

TYPICAL NOTES

ROOF DECK - 1 1/2" X 20 GA. STEEL DECK
JOIST SPACING - VARIES AS SHOWN
JOIST BRIDGING - L 1 1/4 X 1 1/4 X 3/16
PROVIDE BOTTOM CHORD STRUTS AT ALL COLUMNS.
TOP OF STEEL -4" BELOW TOP/DECK (UNLESS NOTED)
FINAL ROOF OPENING SIZES TO BE DETERMINED BY EQUIPMENT MANUFACTURER.
TS-A = TS 2 1/2X2 1/2X1/8 (WELD TO BEAM)

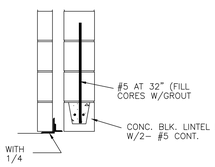

L112A X 5'-4" SCALE: 3/4"=1'-0"
L112D X 4'-8"

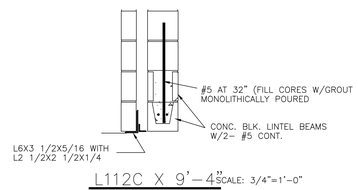

L112C X 9'-4" SCALE: 3/4"=1'-0"
L112B X 7'-8"
L112E X 8'-0"
L112F X 8'-4"

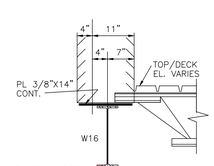

S112-D

SKETCH #18 11-11-19

FOR GENERAL NOTES AND DETAILS SEE DWG. S-123.

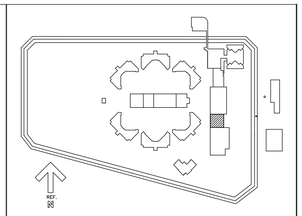

NO.	DATE	DESCRIPTION
1	10-2-96	DIMINSION REVISION

SUBMITTED
ARCHITECT

SUBMITTED
ENGINEER

APPROVED
DEPARTMENT OF CORRECTIONS

APPROVED

CHECKED BY DEPARTMENT OF GENERAL SERVICES

ARCH	STRUCT	H.V.A.C.	PLBG	ELECT	MISC

AS BUILT

COMMONWEALTH OF PENNSYLVANIA
DEPARTMENT OF GENERAL SERVICES
HARRISBURG, PENNSYLVANIA

PROJECT NO. DGS 579-2 PHASE 2

STATE CORRECTIONAL INSTITUTION
CLEARFIELD
HOUTZDALE, PENNSYLVANIA

L.D.Astorino & Associates, Ltd.
Architecture / Planning / Interior Design
227 Fort Pitt Boulevard
Pittsburgh, PA 15222
412/765-1700

DRAWING TITLE:
LAUNDRY, COMMISARY AND MAINTENANCE

LATEST REVISION	DATE:	DRAWING NO:
.	6-30-93	S-112
CHECKED BY: D.W.	SCALE: 1/8"=1'-0"	
LDA PROJECT NO: 92539	SET NO:	

ENTECH ENGINEERING

Reading, PA • Pottsville, PA • Mountaintop, PA • Lititz, PA • Pittsburgh, PA

Project: HOUTZDALE

Subject: JOIST REINF. DETAIL

Project No. 5767.001

Date 11-11-19

By CA

Page 70 of

Comments

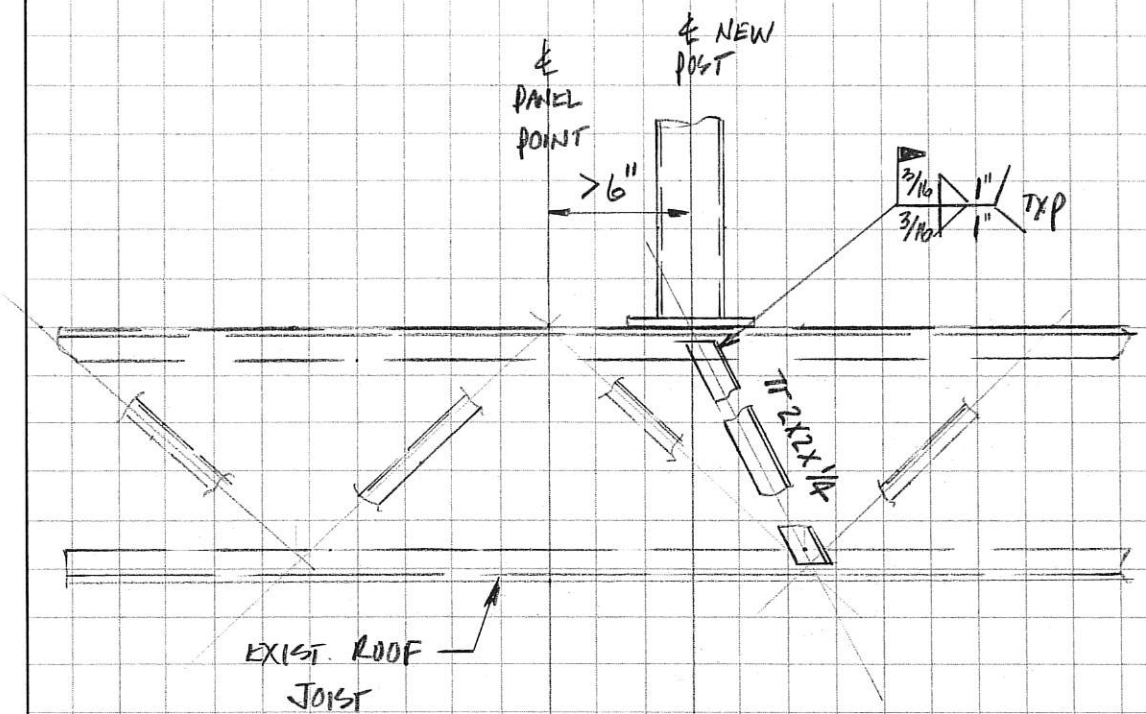

JOIST REINFORCING DETAIL
FOR CONCENTRATED LOADS
LOCATED >6" FROM EXISTING
PANEL POINT

SKETCH #19